REFLECTIVE CRACKING PHASE I

NATIONAL AIRPORT PAVEMENT TESTING FACILITY
WILLIAM J. HUGHES TECHNICAL CENTER
ATLANTIC CITY AIRPORT, NEW JERSEY

01/18/2012 (DRAWINGS REVISED ON 12/20/2016)

NEW JERSEY STATE MAP N.T.S.

VICINITY MAP N.T.S.

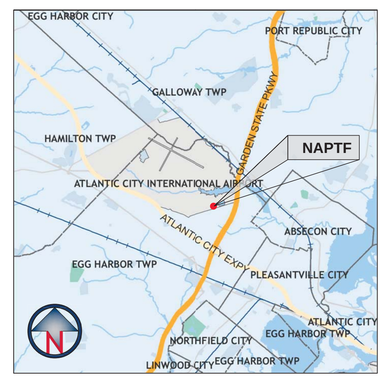

PROJECT LOCATION MAP N.T.S.

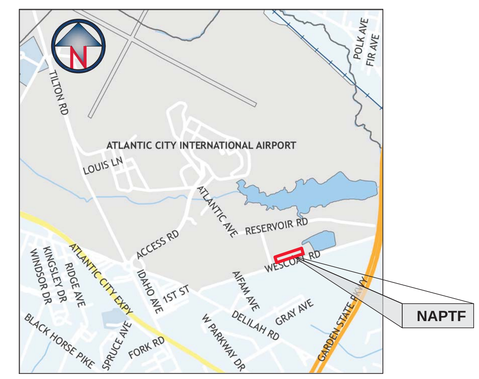

AERIAL VIEW OF THE NAPTF BUILDING N.T.S.

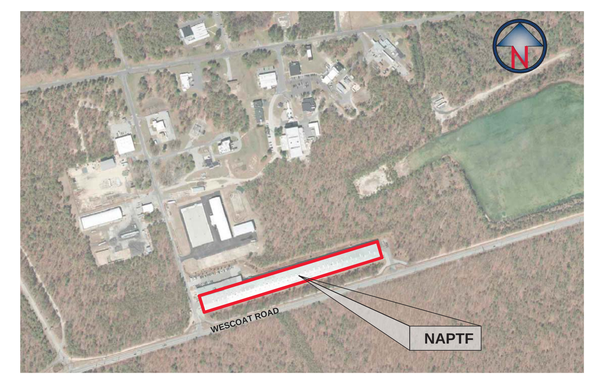

NAPTF BUILDING KEY PLAN

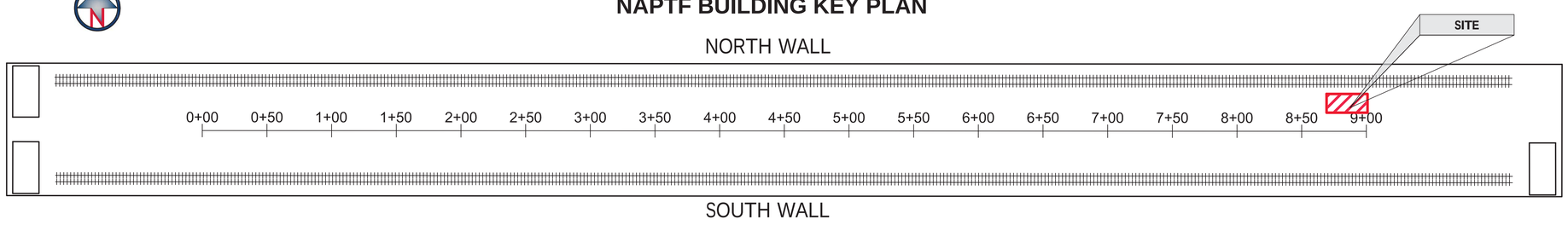

INDEX OF DRAWINGS

SHEET #	SHEET TITLE	LAST REVISED
1 OF 7	COVER SHEET	12/20/2016
2 OF 7	SITE ACCESS, HAULING AND STAGING AREA PLAN	12/20/2016
3 OF 7	NAPFT BUILDING ACCESS AND CONTROL NETWORK PLAN	12/20/2016
4 OF 7	EXISTING CONDITIONS PLAN	12/20/2016
5 OF 7	CONSTRUCTION PLAN	12/20/2016
6 OF 7	INSTRUMENTATION PLAN	12/20/2016
7 OF 7	INSTRUMENTATION PLAN SIDE VIEWS	12/20/2016

PREPARED BY:

SRA INTERNATIONAL, A CSRA COMPANY
1201 NEW ROAD, SUITE 242
LINWOOD, NEW JERSEY 08221
PHONE: (609) 601-6800

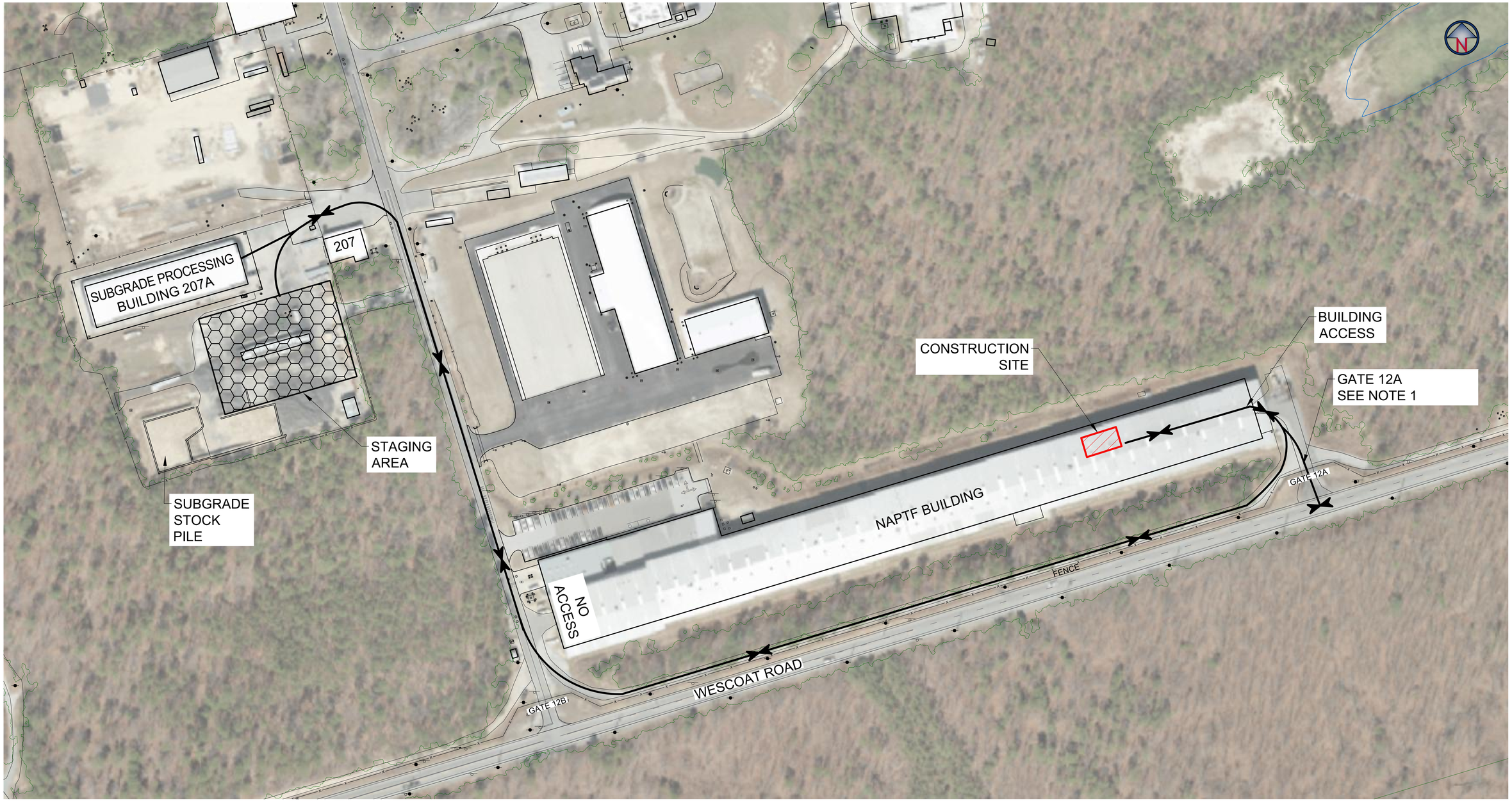

80' 0 80' 160' 240'

GRAPHIC SCALE

1" = 80'

NOTES:

1. CONTRACTORS ACCESS THROUGH THE GATE AVAILABLE BY ADVANCED REQUEST.
2. LOCATION OF THE STAGING AREA SHOWN IS APPROXIMATE. THE EXACT LOCATION WILL BE DETERMINED IN THE FIELD BY THE RESIDENT ENGINEER.
3. SEE SHEET NUMBER 3 FOR INSIDE THE BUILDING STAGING AREA LOCATION AND RESTRICTIONS.

LEGEND:

- X — FENCE
- HAUL ROUTE
- CONSTRUCTION SITE
- STAGING AREA

NO.	REVISIONS	DATE	BY	CHK	APR
1	REVISED SHEETS 3 AND 4 PER FAA COMMENTS.	12/20/2016	M.M.		

CSRA, INC.
1201 NEW ROAD, SUITE 242
LINWOOD, NEW JERSEY 08221
PHONE: (609) 601-6800

FOR

NATIONAL AIRPORT PAVEMENT TEST FACILITY
ATLANTIC CITY AIRPORT, NJ

	NAME	DATE
DRAWN	M.MAZUREK	12/01/2016
CHECKED	H.YIN	
FAA APPROVAL DATE:		

REFLECTIVE CRACKING PHASE I

SITE ACCESS, HAULING AND STAGING AREA PLAN

PROJECT NO: | SIZE: ANSI D | SCALE: AS NOTED | SHEET 2 OF 7

CAD FILE: REFL-CRACK-PHA1-GNRL.DWG

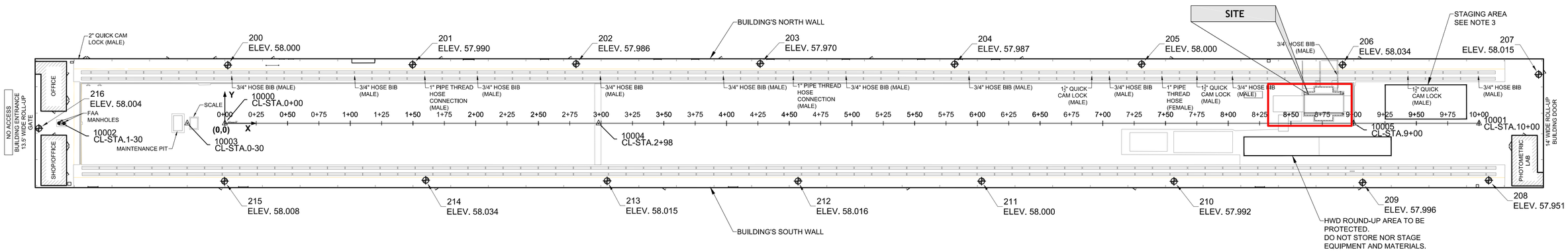

NAPTF BUILDING PLAN VIEW

SCALE: 1"=40'

CENTER LINE MARKER POINTS

NUMBER	X COORDINATE [FEET]	Y COORDINATE [FEET]	LOCATION DESCRIPTION	MARKER DESCRIPTION
10000	0.000	0.0000	ON CENTER LINE STA. 0+00	MAG AND WASHER
10001	1,000.000	0.000	ON CENTER LINE STA. 10+00	MAG AND WASHER
10002	-130.000	0.000	ON CENTER LINE STA. -1-30	MAG AND WASHER
10003	-30.000	0.000	ON CENTER LINE STA. 0-30	MAG AND WASHER
10004	298.000	0.000	ON CENTER LINE STA. 2+98	MAG AND WASHER
10005	900.000	0.000	ON CENTER LINE STA. 9+00	MAG AND WASHER

CENTER LINE MARKER DETAIL

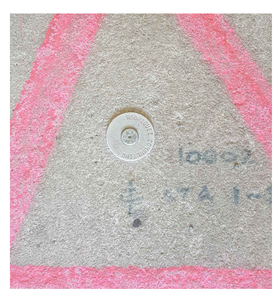

CONTROL POINTS

NUMBER	X COORDINATE [FEET]	Y COORDINATE [FEET]	Z ELEVATION [FEET]	DESCRIPTION
200	2.352	46.209	58.000	MAG AND WASHER
201	149.673	46.634	57.990	MAG AND WASHER
202	280.029	47.236	57.986	MAG AND WASHER
203	426.822	47.441	57.970	MAG AND WASHER
204	581.880	47.034	57.987	MAG AND WASHER
205	730.901	47.054	58.000	MAG AND WASHER
206	891.088	46.481	58.034	MAG AND WASHER
207	1047.423	38.858	58.015	MAG AND WASHER
208	1007.640	-45.426	57.951	MAG AND WASHER
209	907.144	-47.198	57.996	MAG AND WASHER
210	756.728	-46.194	57.992	MAG AND WASHER
211	603.298	-46.091	58.000	MAG AND WASHER
212	456.998	-45.992	58.016	MAG AND WASHER
213	304.791	-45.889	58.015	MAG AND WASHER
214	160.140	-45.350	58.034	MAG AND WASHER
215	-0.315	-46.085	58.008	MAG AND WASHER
216	-148.287	-4.082	58.004	MAG AND WASHER

CONTROL POINT MARKER DETAIL

EACH CONTROL POINT LOCATION S MARKED WITH A MAGNETIC NAIL WITH WASHER. THE CONTROL POINT NUMBER IS ENGRAVED ON EACH WASHER.

NOTES:

1. THE PROJECT AREA IS LOCATED INSIDE OF THE NATIONAL AIRPORT PAVEMENT TESTING FACILITY, BUILDING NUMBER 296, WILLIAM J. HUGHES TECHNICAL CENTER, LOCATED AT THE ATLANTIC CITY INTERNATIONAL AIRPORT, EGG HARBOR TOWNSHIP, NEW JERSEY 08405.

2. THE HORIZONTAL CONTROL NETWORK IS REFERENCED TO A LOCAL COORDINATE SYSTEM ALIGNED WITH THE NAPTF TESTING AREA CENTER LINE. THE VERTICAL CONTROL NETWORK IS ALSO REFERENCED TO A LOCAL ASSUMED DATUM.

3. LOCATION OF THE STAGING AREA SHOWN IS APPROXIMATE. THE EXACT LOCATION WILL BE DETERMINED IN THE FIELD BY THE RESIDENT ENGINEER.

LEGEND

- CENTER LINE MARKER - MAG NAIL
- CONTROL POINT - MAG NAIL
- MANHOLE

40' 0 40' 80' 120'

GRAPHIC SCALE

1" = 40'

NO.	REVISIONS	DATE	BY	CHK	APR
1	REVISED SHEETS 3 AND 4 PER FAA COMMENTS.	12/20/2016	M.M.		

CSRA, INC.
1201 NEW ROAD, SUITE 242
LINWOOD, NEW JERSEY 08221
PHONE: (609) 601-6800

FOR

NATIONAL AIRPORT PAVEMENT TEST FACILITY
ATLANTIC CITY AIRPORT, NJ

	NAME	DATE
DRAWN	M.MAZUREK	12/01/2016
CHECKED	H.YIN	
FAA APPROVAL DATE:		

REFLECTIVE CRACKING PHASE 1
NAPTF BUILDING ACCESS AND CONTROL NETWORK PLAN

PROJECT NO: | SIZE: ANSI D | SCALE: AS NOTED | SHEET 3 OF 7

CAD FILE: REFL-CRACK-PHA1-GNRL.DWG

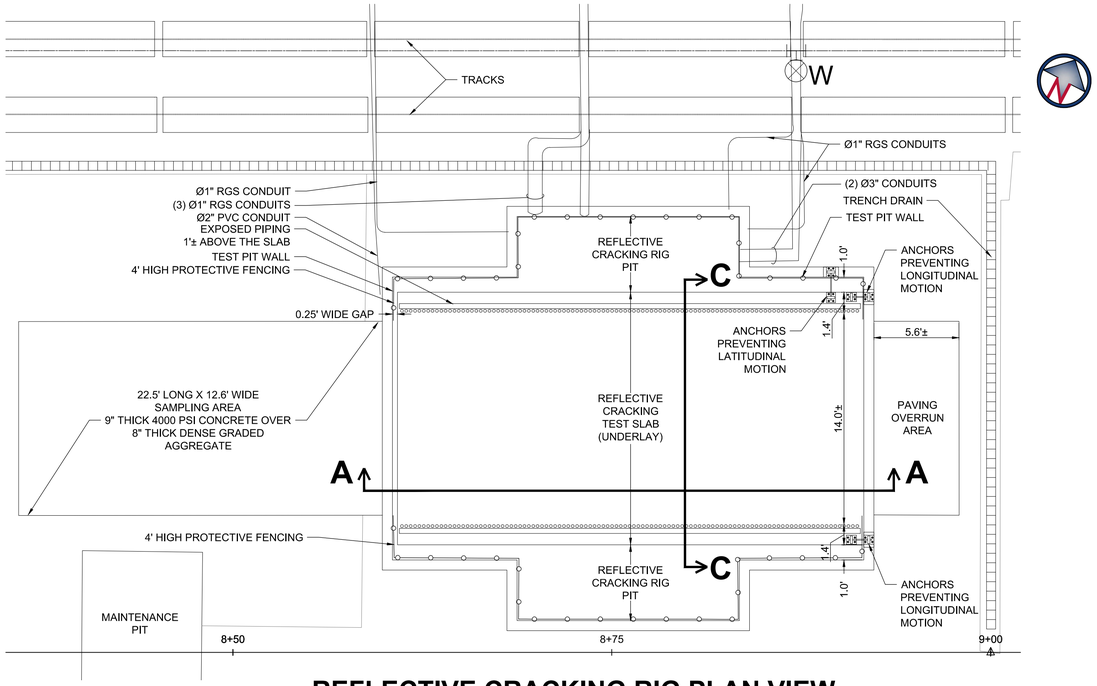

REFLECTIVE CRACKING RIG PLAN VIEW

SCALE: 1"=5'

REFLECTIVE CRACKING TEST AREA LOOKING EAST VIEW

N.T.S.

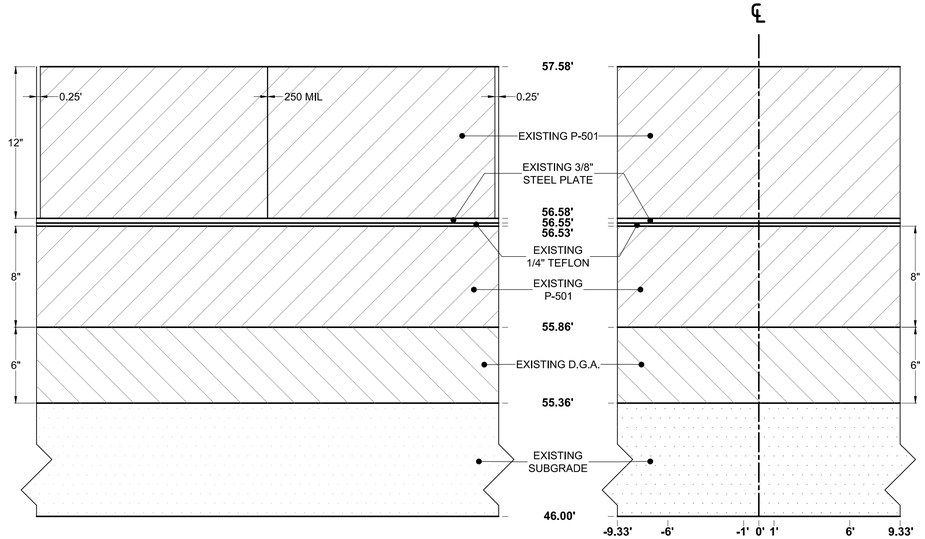

SECTION A-A

SECTION C-C

EXISTING TEST AREA UNDERLAY DETAIL

HORIZONTAL SCALE: 1"=5'

VERTICAL SCALE: 1"=0.5'

LEGEND:

- P-501 CONCRETE PAVEMENT (PORTLAND CEMENT CONCRETE)
- DENSE GRADED AGGREGATE
- SUBGRADE

5' 0 5' 10' 15'

GRAPHIC SCALE

1" = 5'

REFLECTIVE CRACKING TEST AREA LOOKING WEST VIEW

N.T.S.

NO.	REVISIONS	DATE	BY	CHK	APR
1	REVISED SHEETS 3 AND 4 PER FAA COMMENTS.	12/20/2016	M.M.		

CSRA, INC.
1201 NEW ROAD, SUITE 242
LINWOOD, NEW JERSEY 08221
PHONE: (609) 601-6800

FOR

NATIONAL AIRPORT PAVEMENT TEST FACILITY
ATLANTIC CITY AIRPORT, NJ

	NAME	DATE
DRAWN	M.MAZUREK	12/01/2016
CHECKED	H.YIN	
FAA APPROVAL DATE:		

REFLECTIVE CRACKING
TESTING AREA EXISTING CONDITIONS PLAN

PROJECT NO: | SIZE: ANSI D | SCALE: AS NOTED | SHEET 4 OF 7

CAD FILE: REFL-CRACK-PHA1-GNRL.DWG

NOTE: SEE SHEET 4 FOR EXISTING TEST RIG DETAILS

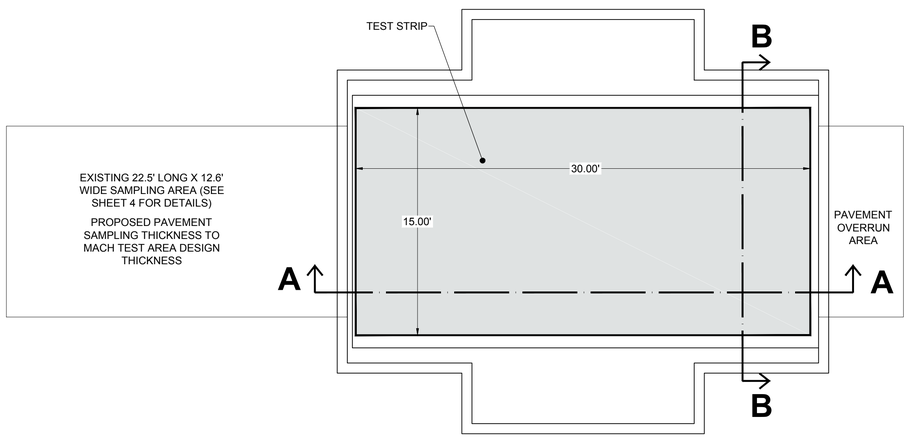

PLAN VIEW

SCALE: 1"=5'

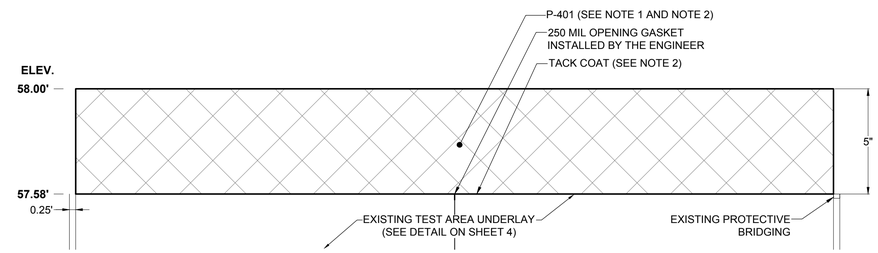

SECTION A-A

HORIZONTAL SCALE: 1"=3'
VERTICAL SCALE: 1"=0.3'

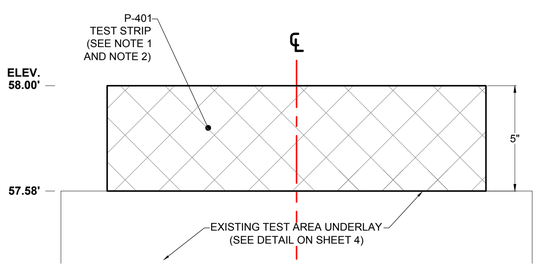

SECTION B-B

HORIZONTAL SCALE: 1"=3'
VERTICAL SCALE: 1"=0.3'

NOTES:

1. TEST STRIP WAS PLACED IN TWO (2) 2½" COMPACTED LIFTS.
2. STRAIGHT ASPHALT BINDER (I.E., PG 64-22) WAS APPLIED BETWEEN LIFTS AND ON TOP OF THE CONCRETE AS A TACK COAT, AT AN APPLICATION RATE OF 0.04 – 0.06 GAL/YD2.

LEGEND:

P-401 PLANT MIX BITUMINOUS PAVEMENT

NO.	REVISIONS	DATE	BY	CHK	APR
1	REVISED SHEETS 3 AND 4 PER FAA COMMENTS.	12/20/2016	M.M.		

CSRA, INC.
1201 NEW ROAD, SUITE 242
LINWOOD, NEW JERSEY 08221
PHONE: (609) 601-6800

FOR

NATIONAL AIRPORT PAVEMENT TEST FACILITY
ATLANTIC CITY AIRPORT, NJ

	NAME	DATE
DRAWN	M.MAZUREK	12/01/2016
CHECKED	H.YIN	
FAA APPROVAL DATE:		

REFLECTIVE CRACKING PHASE I
CONSTRUCTION PLAN

PROJECT NO: | SIZE: ANSI D | SCALE: AS NOTED | SHEET 5 OF 7

CAD FILE: REFL-CRACK-PHA1-CONST.DWG

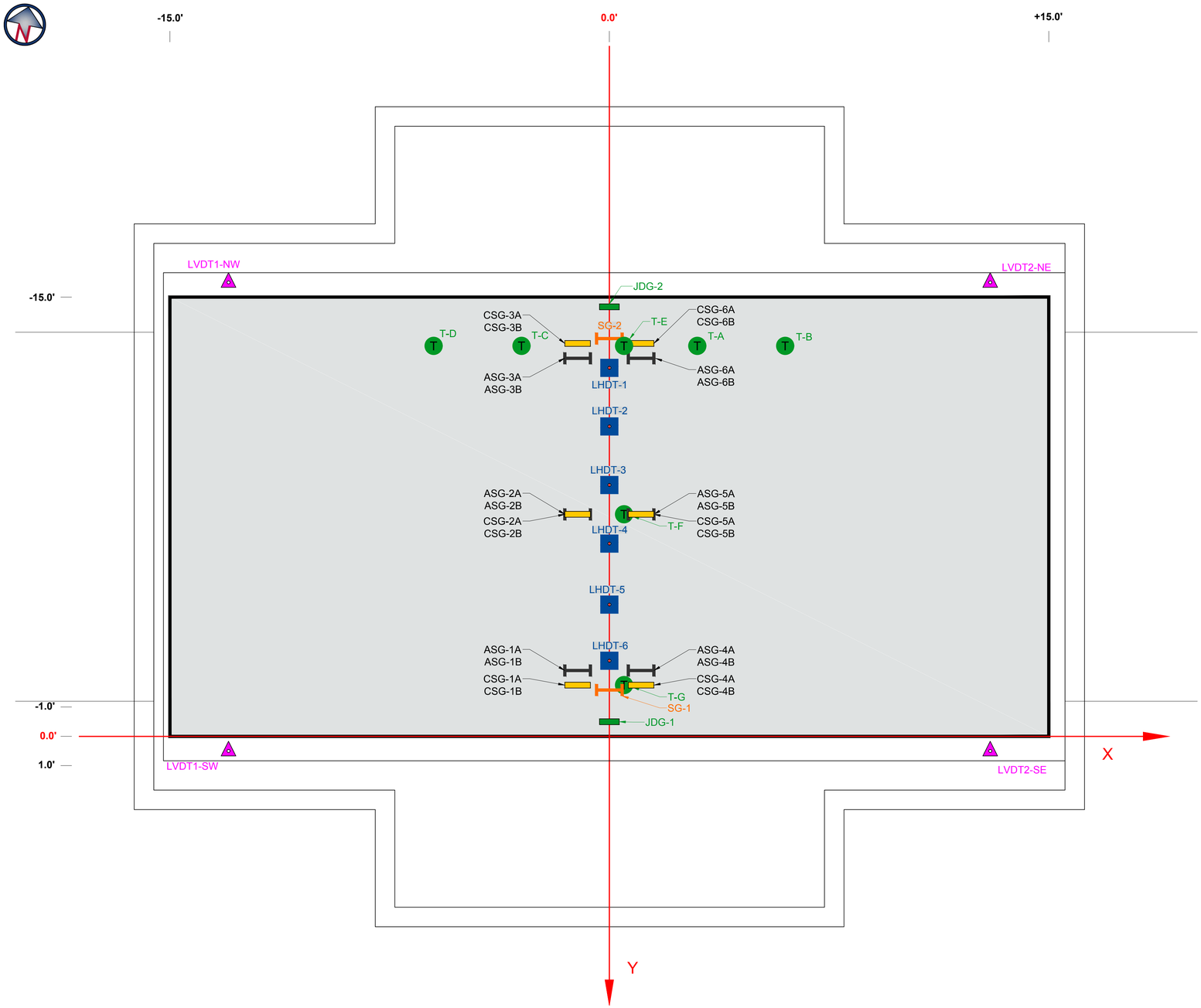

PLAN VIEW

SCALE: 1"=2'

PHASE I INSTRUMENTATION

NAPTF SENSOR NAME	X [INCHES]	Y [INCHES]	Z [INCHES]	DIRE-CTION	CALIBRATION FACTORS	CALIBRATION UNITS	MFG'S LABEL
CSG-1A	-13	-21	-5	Long.	647.1	ue/mv/v	CSG-1
CSG-1B	-13	-21	-2.5	Long.	764.2	ue/mv/v	CSG-2
CSG-2A	-13	-91	-5	Long.	742.9	ue/mv/v	CSG-3
CSG-2B	-13	-91	-2.5	Long.	776.6	ue/mv/v	CSG-4
CSG-3A	-13	-161	-5	Long.	754.5	ue/mv/v	CSG-5
CSG-3B	-13	-161	-2.5	Long.	765.7	ue/mv/v	CSG-6
CSG-4A	13	-21	-5	Long.	796.1	ue/mv/v	CSG-7
CSG-4B	13	-21	-2.5	Long.	792.6	ue/mv/v	CSG-8
CSG-5A	13	-91	-5	Long.	781.9	ue/mv/v	CSG-9
CSG-5B	13	-91	-2.5	Long.	750.58	ue/mv/v	CSG-10
CSG-6A	13	-161	-5	Long.	811.7	ue/mv/v	CSG-11
CSG-6B	13	-161	-2.5	Long.	756.4	ue/mv/v	CSG-12
ASG-1A	-13	-27	1	Long.	501.23	ue/mv/v	ASG-13-H
ASG-1B	-13	-27	2.5	Long.	558.4	ue/mv/v	ASG-14-H
ASG-2A	-13	-91	1	Long.	445.2	ue/mv/v	ASG-15-H
ASG-2B	-13	-91	2.5	Long.	599.25	ue/mv/v	ASG-16-H
ASG-3A	-13	-155	1	Long.	763.45	ue/mv/v	ASG-5
ASG-3B	-13	-155	2.5	Long.	489.49	ue/mv/v	ASG-6
ASG-4A	13	-27	1	Long.	600.28	ue/mv/v	ASG-7
ASG-4B	13	-27	2.5	Long.	694.48	ue/mv/v	ASG-8
ASG-5A	13	-91	1	Long.	493.38	ue/mv/v	ASG-9
ASG-5B	13	-91	2.5	Long.	564.07	ue/mv/v	ASG-10
ASG-6A	13	-155	1	Long.	582.43	ue/mv/v	ASG-11
ASG-6B	13	-155	2.5	Long.	535.02	ue/mv/v	ASG-12-H
JDG-1	0	-6	0	Long.	0.000458	mm/1x10^-6	BGA08539
JDG-2	0	-176	0	Long.	0.000434	mm/1x10^-6	BGA08538
LHDT-1	0	-151	-1.875	Long.	0.2	in/v	
LHDT-2	0	-127	-1.875	Long.	0.2	in/v	
LHDT-3	0	-103	-1.875	Long.	0.2	in/v	
LHDT-4	0	-79	-1.875	Long.	0.2	in/v	
LHDT-5	0	-55	-1.875	Long.	0.2	in/v	
LHDT-6	0	-31	-1.875	Long.	0.2	in/v	
SG-1	0	-19	0.75				
SG-2	0	-163	0.75				
T-A	36	-160	2				
T-B	72	-160	2				
T-C	-36	-160	2				
T-D	-72	-160	2				
T-E	6	-160	5				
T-F	6	-91	5				
T-G	6	-21	5				

INSTRUMENT KEY		
	ASG	ASPHALT STRAIN GAGE
	CSG	CONCRETE STRAIN GAGE
	JDG	JOINT DISPLACEMENT GAGE
	LHDT	POTENTIOMETER
	LVDT	LINEAR VARIABLE DISPLACEMENT TRANSDUCER
	SG	SURFACE STRAIN GAGE
	T	THERMOCOUPLE

NOTE:

Z - VERTICAL DISTANCE IN INCHES MEASURED FROM BOTTOM OF ASPHALT LAYER IN UPWARD DIRECTION.

NO.	REVISIONS	DATE	BY	CHK	APR
1	REVISED SHEETS 3 AND 4 PER FAA COMMENTS.	12/20/2016	M.M.		

CSRA, INC.
1201 NEW ROAD, SUITE 242
LINWOOD, NEW JERSEY 08221
PHONE: (609) 601-6800

FOR

NATIONAL AIRPORT PAVEMENT TEST FACILITY
ATLANTIC CITY AIRPORT, NJ

	NAME	DATE
DRAWN	M.MAZUREK	12/05/2016
CHECKED	H.YIN	
FAA APPROVAL DATE:		

REFLECTIVE CRACKING PHASE I
INSTRUMENTATION PLAN

PROJECT NO: | SIZE: ANSI D | SCALE: AS NOTED | SHEET 6 OF 7

CAD FILE: REFL-CRACK-PHA1-INSTR.DWG

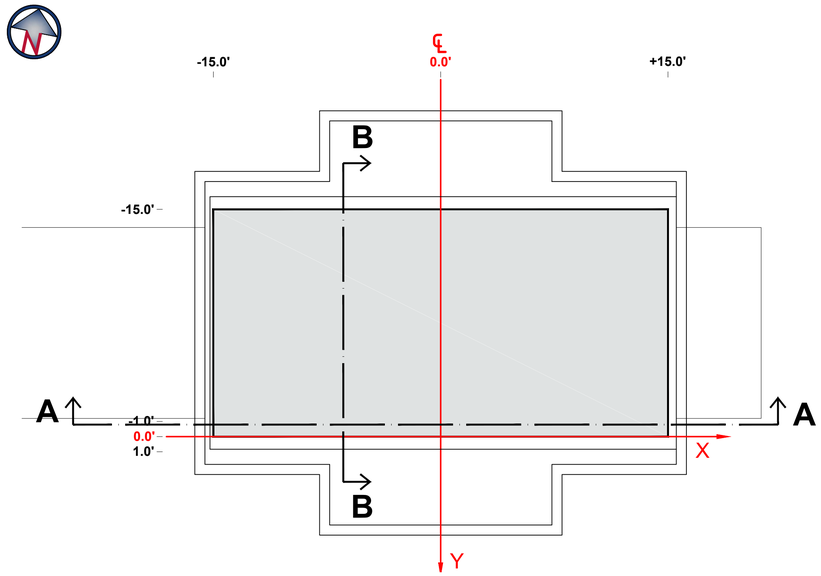

PLAN VIEW

SCALE: 1"=5'

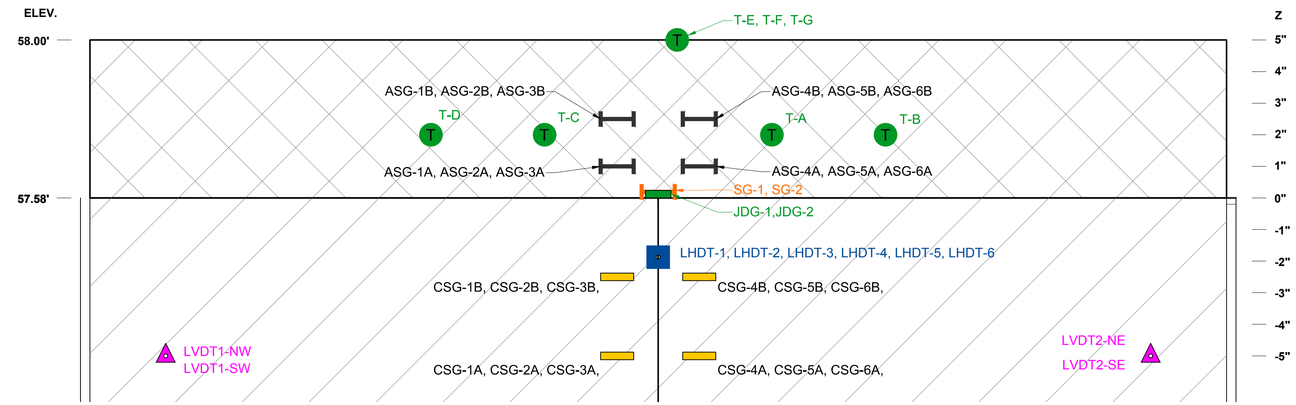

SIDE VIEW A-A

HORIZONTAL SCALE: 1"=2'
VERTICAL SCALE: 1"=0.2'

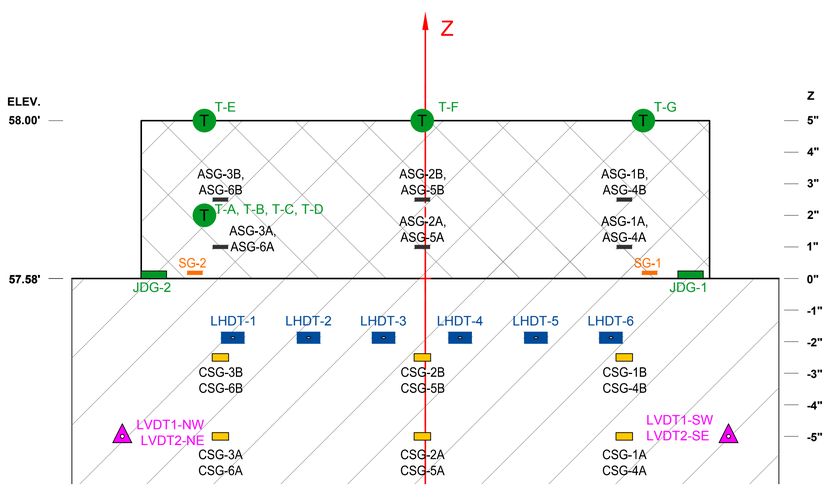

SIDE VIEW B-B

HORIZONTAL SCALE: 1"=2'
VERTICAL SCALE: 1"=0.2'

INSTRUMENT KEY		
	ASG	ASPHALT STRAIN GAGE
	CSG	CONCRETE STRAIN GAGE
	JDG	JOINT DISPLACEMENT GAGE
	LHDT	POTENTIOMETER
	LVDT	LINEAR VARIABLE DISPLACEMENT TRANSDUCER
	SG	SURFACE STRAIN GAGE
	T	THERMOCOUPLE

LEGEND:

P-401 PLANT MIX BITUMINOUS PAVEMENT

NO.	REVISIONS	DATE	BY	CHK	APR
1	REVISED SHEETS 3 AND 4 PER FAA COMMENTS.	12/20/2016	M.M.		

CSRA, INC.
1201 NEW ROAD, SUITE 242
LINWOOD, NEW JERSEY 08221
PHONE: (609) 601-6800

FOR

NATIONAL AIRPORT PAVEMENT TEST FACILITY
ATLANTIC CITY AIRPORT, NJ

	NAME	DATE
DRAWN	M.MAZUREK	12/05/2016
CHECKED	H.YIN	
FAA APPROVAL DATE:		

REFLECTIVE CRACKING PHASE I

INSTRUMENTATION PLAN SIDE VIEWS

PROJECT NO: | SIZE: ANSI D | SCALE: AS NOTED | SHEET 7 OF 7

CAD FILE: REFL-CRACK-PHA1-INSTR.DWG