ote technical note technic

Reflective Cracking Outdoor Phase I Comprehensive Report
Part A –Construction History Report

July 2020

DOT/FAA/TC-TNxx/xx

This document is available to the U.S. public through the National Technical Information Services (NTIS), Springfield, Virginia 22161.

This document is also available from the Federal Aviation Administration William J. Hughes Technical Center at actlibrary.tc.faa.gov.

U.S. Department of Transportation
Federal Aviation Administration

NOTICE

This document is disseminated under the sponsorship of the U.S. Department of Transportation in the interest of information exchange. The United States Government assumes no liability for the contents or use thereof. The United States Government does not endorse products or manufacturers. Trade or manufacturer's names appear herein solely because they are considered essential to the objective of this report. The findings and conclusions in this report are those of the author(s) and do not necessarily represent the views of the funding agency. This document does not constitute FAA policy. Consult the FAA sponsoring organization listed on the Technical Documentation page as to its use.

This report is available at the Federal Aviation Administration William J. Hughes Technical Center's Full-Text Technical Reports page: actlibrary.tc.faa.gov in Adobe Acrobat portable document format (PDF).

Technical Report Documentation Page

1. Report No.	2. Government Accession No.	3. Recipient's Catalog No.
DOT/FAA/TC-TNxx/xx	DOT/FAA/TC-TNxx/xx	

4. Title and Subtitle	5. Report Date
Reflective Cracking Outdoor Phase I Comprehensive Report Part A – Construction History Report	July 10, 2020
	6. Performing Organization Code
7. Author(s) Hao Yin, Mir Arefin, Mandal Tirupan	8. Performing Organization Report No.
9. Performing Organization Name and Address GDIT 600 Aviation Research Blvd. Egg Harbor Township, NJ 08234	10. Work Unit No. (TRAIS)
	11. Contract or Grant No. DTFACT-15-D-00007
12. Sponsoring Agency Name and Address U.S. Department of Transportation Federal Aviation Administration Airport Engineering Division 800 Independence Ave., SW Washington, DC 20591	13. Type of Report and Period Covered Technical Note
	14. Sponsoring Agency Code AAS-100

15. Supplementary Notes

The Federal Aviation Administration Airport Technology Research and Development COR is Jeffrey Gagnon.

16. Abstract

During 2012-2019, several hot mixed asphalt (HMA) test overlays was constructed at the Federal Aviation Administration (FAA) National Airport Pavement Test Facility (NAPTF) to study reflective cracking in airfield pavements. To further advance the research, two outdoor test lanes were constructed at the FAA National Airport Pavement and Materials Research Center (NAPMRC) in 2019. The core objective of the Reflective Cracking Outdoor Phase I (RCOP-I) was to conduct comprehensive full-scale tests under aircraft and temperature loads in field conditions. Both test lanes have an identical pavement design (10-ft by 50-ft) that is composed of 3-in. HMA (P-401MR) placed atop 9-in. thick concrete (P-501MR) slabs that are supported on a 8.4-in. granular subbase (P-154MR) and the existing subgrade (P-152MR). Construction of the project began on June 2018 with the excavation of the project site and finished on May 2019 with the completion of HMA overlay (P-401MR). During this timeframe, construction of subgrade (P-152MR), subbase (P-154MR), PCC layer (P-501MR), shoulder (P-209MR) and HMA overlay (P-401MR) was completed on June 2018, July 2018, January 2019, April 2019 and May 2019 respectively. Acceptance test was done on each layer using Nuclear Density Gage (NDG) and Leica 3D Scanner for required density and elevation verification. Field testing such as Lightweight Deflectometer (LWD), Heavyweight Deflectometer (HWD), Portable Seismic Pavement Analyzer for Unbound Material (D-PSPA), and Dynamic Cone Penetrometer (DCP) were performed depending on the layer type. Material samples from each layer was collected to perform mix design verification testing in the FAA's NextGen Pavement Materials Laboratory. Instrumentation in each test lane consisted of 40 surface strain gages (SG), 10 embedded strain gages (EG), 10 joint displacement gages (JDG), 5 joint opening gages (JOG) and 12 nos. thermocouples (T).

17. Key Words	18. Distribution Statement
	This document is available to the U.S. public through the National Technical Information Service (NTIS), Springfield, Virginia 22161. This document is also available from the Federal Aviation Administration William J. Hughes Technical Center at actlibrary.tc.faa.gov.

19. Security Classif. (of this report)	20. Security Classif. (of this page)	21. No. of Pages	22. Price
Unclassified	Unclassified	83	

Form DOT F 1700.7 (8-72) Reproduction of completed page authorized

TABLE OF CONTENTS

	Page
EXECUTIVE SUMMARY	X
INTRODUCTION	1
Overview	1
Reflective Cracking Indoor Phase 1 (RCIP-1)	1
Reflective Cracking Indoor Phase 2 (RCIP-2)	2
Reflective Cracking Indoor Phase 3 (RCIP-3)	2
Reflective Cracking Indoor Phase 4 (RCIP-4)	2
Reflective Cracking Indoor Phase 5 (RCIP-5)	2
Reflective Cracking Indoor Phase 6 (RCIP-6)	3
Objectives	3
REFLECTIVE CRACKING OUTDOOR PHASE 1	4
Construction Scope of Work	4
Construction Resources and Schedule	8
EXCAVATION OF RCOP-1 PROJECT SITE AREA	8
RCOP-1 PAVEMENT CONSTRUCTION	14
General	14
P-152MR Existing Subgrade	14
Testing of Existing Subgrade	14
Construction of Subgrade	14
P-154MR Material	21
Testing of the P-154MR Material	21
Placement of P-154MR Material	21
P-501MR Portland Cement Concrete (PCC) Layer	37
Testing of the P-501MR Material	38
P-501MR Placement	38
P-209MR Shoulder	46
P-401MR Hot-Mix Asphalt (HMA) Surface Layer	51
Testing of the P-401MR Material	51

P-401MR Placement 52

Instrumentation 57

REFERENCES 71

APPENDICES A-1

LIST OF FIGURES

Figure	Page
1 Mechanisms of Reflective Cracking (Nunn, 1989)	2
2 Project Location for Reflective Cracking Outdoor Phase 1	4
3 Reflective Cracking Outdoor Phase I, Cross-section View	5
4 Reflective Cracking Outdoor Phase I, Test Item Layout	6
5 Reflective Cracking Outdoor Phase I, Test Item Cross-section	7
6 Saw Cutting of Existing HMA Surface Layer	9
7 HMA Layer Removal	10
8 Exposed Existing DGA	10
9 Construction Area Covered with Plastic Sheeting	11
10 Laser Level (RL-SV2S) Used during Excavation/Construction	12
11 Mix of Existing DGA and Subgrade after Excavating 10-in. of DGA	12
12 Material Sampling of Existing Subgrade (P-152MR)	13
13 Levelled Subgrade	13
14 Compacting RCOP-1 Existing Subgrade (P-152MR)	15
15 Nuclear Density Gauge Test on P-152MR Layer	16
16 Leica 3D Scanner Setup	17
17 LWD Test on P-152MR Layer	18
18 D-PSPA Test on P-152MR Layer	18
19 Thermocouple Installation on Top of P-152MR Layer	19
20 Grading of P-152MR	19
21 Temporary Ramp Placement on P-152MR	20
22 Compacting P-152MR between Stations 0+00 to 0+10	20
23 Unloading P-154MR Material	22
24 Distribution and Smoothing of P-154MR Material	23
25 P-154MR Material Sampling for Laboratory Testing	23
26 HPRV Used to Water the P-154MR Layer	24
27 Nuclear Density Gauge Test on P-154MR Layer	25
28 Watering P-154MR layer using the HPRV	25
29 Compacting the P-154MR layer using the 'CAT PS300C Roller'	26
30 Sand Cone Test on P-154MR Layer	27
31 Grading of P-154MR Layer	27
32 Straightedge Testing on P-154MR Layer	28
33 Collection of Moisture Sample from P-154MR Layer	29
34 Using BOMAG Soil Stabilizer to Scarify P-154MR Layer	29
35 Soft Spot/Pumping Location in the P-154MR Layer	31
36 Excavated Area Due to Pumping Issue in the P-154MR Layer	31
37 Drying of Excavated P-154MR Material	32
38 Filling Back the Excavated P-154MR	32
39 Compacting the Excavated Area in the P-154MR Layer	33
40 Digging out Trench at North-West Corner of the Project Site Area	34
41 Pumping of Water from the Project Site Area	34
42 Manual Survey Using 'Pentax AI-320 Level'	35
43 DCP Test on Top of P-154MR Surface	36

44 Pilot Hole Drilled for DCP Test on Top of P-152MR Surface 36
45 Formwork for Concrete on Top of P-154MR Layer 37
46 Doweled Contraction Joint 37
47 Installation of Thermocouple on Top of P-154MR Layer 38
48 Acceptance Testing on P-501MR Material (Slump Test) 39
49 Acceptance Testing on P-501MR Material (Air Content Test) 40
50 P-501MR Material Sampling 40
51 P-501MR Material Placement 41
52 P-501MR Surface Finishing 42
53 Finished P-501MR Layer 43
54 Saw Cuts on P-501MR Layer 43
55 Joint Saw Cut and Sealing 44
56 HWD Test on P-501MR Layer 45
57 PSPA Test on P-501MR Layer 45
58 P-154MR Placement and Compaction in the Shoulder Area 46
59 New Silt Fence 47
60 P-209MR Material being Stored near the Project Area 47
61 Compacted P-209MR Shoulder 48
62 Compacting HMA on top of P-209MR Shoulder 49
63 Grading the West Side of Project Area 50
64 Tack Coat Spray on RCOP-1 Project Area 51
65 P-401MR HMA Material being Transferred for Paving 53
66 Covering Embedded Sensors with HMA Material 54
67 Compacting the P-401MR Lift using Caterpillar Rollers 54
68 Nuclear Densometer Test on the Compacted P-401MR Lift 55
69 Compacting the P-401MR Lift using a Smaller Roller 55
70 Final P-401MR Lift 56
71 Saw Cutting the P-401MR Edges 57
72 Trench Digging and Conduit Installation in P-154MR Layer 58
73 Backfilling Installed Conduits Trench with P-154MR Material 58
74 Compacting the Trench using the Plate Vibrator 59
75 Excavating the Conduit Trench in the P-154MR Layer 60
76 Compacting the Trench at Bottom using the Plate Vibrator 60
77 Nuclear Gage Density Test on Top of the Conduit Trench 61
78 Vertical Edge Gage Sensor Surface Preparation for the Displacement Gages 61
79 Installation of Junction Boxes and Trench Conduits 62
80 Open Junction Box 63
81 Installing Thermocouples and Storing in the Junction Box 63
82 Installation of Joint Displacement Gage 63
83 Framework for Joint Displacement Gage Installation 64
84 Backfilling Trench Conduits with P-154MR Material 64
85 Pad for DAQ Solar Cabinet 65
86 DAQ Solar Cabinet Installation 65
87 Blue Thermocouple Trunk Lines and Black Sensor Truck Lines Installation 66
88 Flexible Conduits Installation 67
89 Removal of 1-foot Joint Seal (Center of Each Joint) 68

90 Installation of FAA Sensors 68
91 Installation of Embedded Sensors 69
92 Sealing of Joints 70
93 Marking the Location of Embedded Sensors on Top of P-501MR Layer 70
94 Installation of Thermocouples on Top of P-501MR Layer 71

LIST OF TABLES

Table	Page
1 Brief Timeline for Construction of Project Site Area	8
2 Timeline for Construction of P-152MR Layer	14
3 Timeline for Construction of P-154MR Layer	22
4 P-501MR Placement per Truck	39

LIST OF ACRONYMS

ASTM	American Standard for Testing and Materials
ATRD	Airport Technology Research and Development
DAQ	Data Acquisition Unit
DCP	Dynamic Cone Penetrometer
D-PSPA	Portable Seismic Pavement Analyzer for Unbound Material
EG	Strain Gages
FAA	Federal Aviation Administration
FEM	Finite Element Model
HMA	Hot Mix Asphalt
HPRV	The High Performance Research Vehicle
HVS-A	Heavy Vehicle Simulator-Airfields
HWD	Heavy Weight Deflectometer
JDG	Joint Displacement Gages
LWD	Lightweight Deflectometer
NAPMRC	National Airport Pavement and Material Research Center
NAPTF	National Airport Pavement Testing Facility
PSPA	Portable Seismic Pavement Analyzer
RCIP	Reflective Cracking Indoor Phase
RCOP I	Reflective Cracking Outdoor Phase I
SG	Surface Strain Gages
SWL	Single Wheel Load
T	Thermocouple
TO	Temperature Load Only
TT	Traffic and Temperature Load

EXECUTIVE SUMMARY

During 2012-2019, several hot mixed asphalt (HMA) test overlays was constructed at the Federal Aviation Administration (FAA) National Airport Pavement Test Facility (NAPTF) to study reflective cracking in airfield pavements. To further advance the research, two outdoor test lanes were constructed at the FAA National Airport Pavement and Materials Research Center (NAPMRC) in 2019. The core objective of the Reflective Cracking Outdoor Phase I (RCOP-I) was to conduct comprehensive full-scale tests under aircraft and temperature loads in field conditions. Both test lanes have an identical pavement design (10-ft by 50-ft) that is composed of 3-in. HMA (P-401MR) placed atop 9-in. thick concrete (P-501MR) slabs that are supported on a 8.4-in. granular subbase (P-154MR) and the existing subgrade (P-152MR). Construction of the project began on June 2018 with the excavation of the project site and finished on May 2019 with the completion of HMA overlay (P-401MR). During this timeframe, construction of subgrade (P-152MR), subbase (P-154MR), PCC layer (P-501MR), shoulder (P-209MR) and HMA overlay (P-401MR) was completed on June 2018, July 2018, January 2019, April 2019 and May 2019 respectively. Acceptance test was done on each layer using Nuclear Density Gage (NDG) and Leica 3D Scanner for required density and elevation verification. Field testing such as Lightweight Deflectometer (LWD), Heavyweight Deflectometer (HWD), Portable Seismic Pavement Analyzer for Unbound Material (D-PSPA), and Dynamic Cone Penetrometer (DCP) were performed depending on the layer type. Material samples from each layer was collected to perform mix design verification testing in the FAA's NextGen Pavement Materials Laboratory. Instrumentation in each test lane consisted of 40 surface strain gages (SG), 10 embedded strain gages (EG), 10 joint displacement gages (JDG), 5 joint opening gages (JOG) and 12 nos. thermocouples (T).

INTRODUCTION

OVERVIEW.

The Airport Technology Research and Development (ATRD) branch of Federal Aviation Administration (FAA) conducts research and development to enhance the safety of operations at our nation's airports and to ensure the adequacy of engineering specifications and standards in all areas of the airport systems, and, where necessary, develop data to support new standards. The FAA ATRD operates a state-of-the-art, full-scale pavement test facility dedicated solely to airport pavement research, which is located at the William J. Hughes Technical Center near Atlantic City, New Jersey. This test facility, the National Airport Pavement Test Facility (NAPTF), provides high quality accelerated test data from rigid and flexible pavements subjected to simulated aircraft loading. Further, an airport pavement test vehicle (Heavy Vehicle Simulator – Mark VI Airport [HVS-A]) was acquired to conduct performance tests on surface layers at the National Airport Pavement and Materials Research Center (NAPMRC). NAPMRC studies the effects of high tire pressures and temperature on the hot mix asphalt (HMA) surface and also develops HMA mix design procedures to produce mixes that can withstand an anticipated high tire pressure.

The current FAA Advisory Circular 150/5320-6F, *Airport Pavement Design and Evaluation* does not address reflective cracking for asphalt-overlaid concrete pavements. Reflection cracks most commonly result from temperature cycling-induced contraction (opening) and expansion (closing) in the concrete slab. Traffic loading exacerbates the thermally-induced reflection cracks, but the likelihood of spalling at the cracks and the potential for foreign object debris to aircraft is a greater concern to the airport operations (Yin, 2016). Figure 1 illustrates these two primary mechanisms, which causes reflective cracking in the pavements. As shown in figure 1(a), the horizontal movement of the slab is usually due to temperature changes that cause tensile stresses to develop in the overlay. Further, the vertical movement at the joint/crack area (figure 1(b)) is primarily load induced and creates bending, shear, and tensile stresses within the overlay. To implement this failure mode in flexible over rigid design procedure, a series of indoor full-scale test pavements were constructed, instrumented, and tested at the NAPTF (Yin, 2016-2017). A brief summary on these indoor rig tests is provided below. All information provided is taken from the FAA's website (FAA, 2018).

REFLECTIVE CRACKING INDOOR PHASE 1 (RCIP-1). The first construction of indoor full-scale tests for reflective cracking started in 2012. The HMA overlay layer in both sections were 5-in. thick using standard FAA P-401 (PG 64-22) material. RCIP-1 full-scale test started in May 2012 and ended in June 2012. The test was conducted in three stages. The first two stages were conducted with a maximum joint opening of 0.015 in. and two displacement rates, one cycle per 600 seconds and 300 seconds, respectively lasting a total of 2,089 cycles. In stage three, a ramp loading with a displacement rate of 0.10 mils/second was applied to propagate the crack through the top 0.5 in. overlay. The objective of the RCIP-1 test was to examine the appropriateness of substituting temperature load with a mechanical load in full-scale test. In addition, it was expected to identify critical test parameters and capture crack initiation and propagation through various instrumentation techniques.

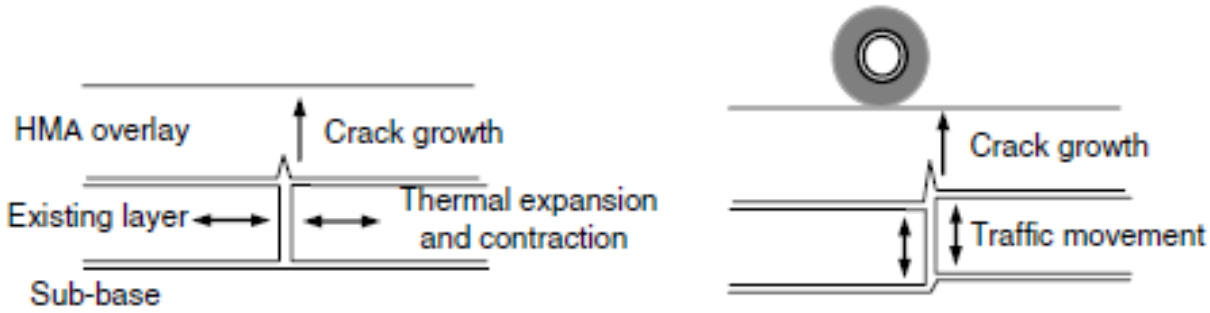

(a) Thermally-induced (b) Traffic-induced

Figure 1. Mechanisms of Reflective Cracking (Nunn, 1989)

REFLECTIVE CRACKING INDOOR PHASE 2 (RCIP-2). The RCIP-2 test started in January 2013 and ended in March 2013. The HMA overlay layer was 5-in. thick and the test continued for 538 cycles. In RCIP-2 testing, the joint opening was set at 12 mils which corresponded to a large temperature drop (17°F) at the overlay bottom in the field. Each haversine loading cycle began with a loading time of 75 seconds, once the actuators reached the maximum horizontal displacement (joint opening), a 75 second unloading was executed and then followed by a rest period of 600 seconds to allow the overlay to relax. The objective of the RCIP-2 test was to understand the mechanism of thermally-induced reflective cracking through full-scale tests. Test results were then compared to the field observations to determine if bottom-up reflection cracks propagated roughly 1 in. per year.

REFLECTIVE CRACKING INDOOR PHASE 3 (RCIP-3). The RCIP-3 test began in June 2014 and was concluded in July 2014 after 6,350 cycles. The test pavement consisted of control and interlayer sections. The interlayer section was designed as 1-in. thick strain relieving HMA plus a 4-in. thick overlay using standard FAA P-401 (PG 64-22) material. The same testing protocol as the RCIP-2 was used. The objective of the RCIP-3 test was to identify an appropriate mitigation technique to retard thermally induced reflective cracking and to evaluate its effectiveness under full-scale test conditions.

REFLECTIVE CRACKING INDOOR PHASE 4 (RCIP-4). The RCIP-4 test began in February 2015 and was concluded in April 2015 after 3,757 cycles. To maintain consistency with the RCIP-3 test, RCIP-4 test overlay consisted of two 5-ft. wide overlay strips, but with different overlay thicknesses (i.e., 5 in. vs. 7 in.). The same testing protocol as the RCIP-2 was used. The objective of the RCIP-4 test was to predict the fatigue life of a given HMA overlay structure and materials using full-scale test data. The fatigue prediction should consider all three-stage process involving crack initiation, propagation, and final failure.

REFLECTIVE CRACKING INDOOR PHASE 5 (RCIP-5). The RCIP-5 test began in March 2017 and was concluded in the same month after 1,919 cycles. The RCIP-5 test overlay consisted of two 5-ft. wide overlay strips with different overlay thicknesses (i.e., 3 in. vs. 6 in.). The same testing protocol as the RCIP-2 was used. The objective of RCIP-5 test was to compare the performance of different overlay thicknesses and answer the question "Is increasing thickness an effective way to extend the overlay fatigue life?" Phase 5 test was also expected to further enrich the reflective

cracking database, particularly the crack propagation rates under controlled loading conditions to mimic the temperature cycles occurring in nature.

REFLECTIVE CRACKING INDOOR PHASE 6 (RCIP-6). The RCIP-6 test began in June 2019 and was concluded in the same month after 6,426 cycles. The RCIP-6 test overlay consisted of two 5-ft. wide overlay strips with same 5 in. thickness. The objective of RCIP-6 test was to assess the effect of extreme cooling cycles on the crack evolution through varied displacement rates. Secondly, it was expected to obtain the model parameters of Paris and Erdogan Law from full-scale test data to support the parallel modeling effort on the crack propagation. To simulate 360-day temperature variations with extreme cool cycles, the loading recipe was divided into two steps. For the first 330 loading cycles, each cycle began with a loading time of 75 seconds, once the actuators (north and south) reached the maximum horizontal displacement (joint opening) of 12 mil, a 75 second unloading was executed, followed by a rest period of 600 seconds to allow the overlay to relax. Then, a different test recipe was executed for the next 30 loading cycles with the same maximum displacement (12 mil). But both loading and unloading time was shortened to 35 seconds. For these 30 loading cycles, a rest period of 300 seconds was also included.

Comprehensive full-scale tests under different aircraft and temperature loads are needed so that the crack propagation model derived from the full-scale Reflective Cracking indoor rig tests can be validated and calibrated to the field conditions. The Heavy Vehicle Simulator-Airfields (HVS-A) at the NAPMRC provides a unique opportunity to isolate and compare load and temperature effects on reflective cracking.

OBJECTIVES.

The primary objectives for the Reflective Cracking Outdoor Phase 1 (RCOP-1) test area are:

- Develop failure models for both aircraft and temperature loads
- Develop a more realistic Finite Element Model (FEM) to address both aircraft and temperature loads
- Isolate and compare load and temperature effects, including dummy and dowel joint comparison, on reflective cracking with 1) temperature load only and 2) aircraft and temperature loads
- Validate and calibrate the crack propagation model derived from the indoor reflective cracking rig test
- Implement findings in the overlay design procedures for all future versions of FAARFIELD

REFLECTIVE CRACKING OUTDOOR PHASE 1

CONSTRUCTION SCOPE OF WORK.

RCOP-1 was designed and constructed to conduct comprehensive full-scale tests under aircraft and temperature loads. Therefore, two experiments were planned at the NAPMRC. Figure 2 shows the general location for the project site. Both experiments have an identical cross-section (figure 3) that is composed of 3 in. thick FAA Item P-401MR plant mix bituminous pavement placed on 9 in. thick FAA Item P-501MR Portland Cement Concrete slabs that are supported by an 8.4 in. thick FAA Item P-154MR granular subbase course and the existing FAA Item P-152MR subgrade (FAA, 2018). P-401, P-501, and P-154 material name identifiers includes the alphabets "MR" (Maximum Response) which indicates the specifications of the materials were modified for research purposes.

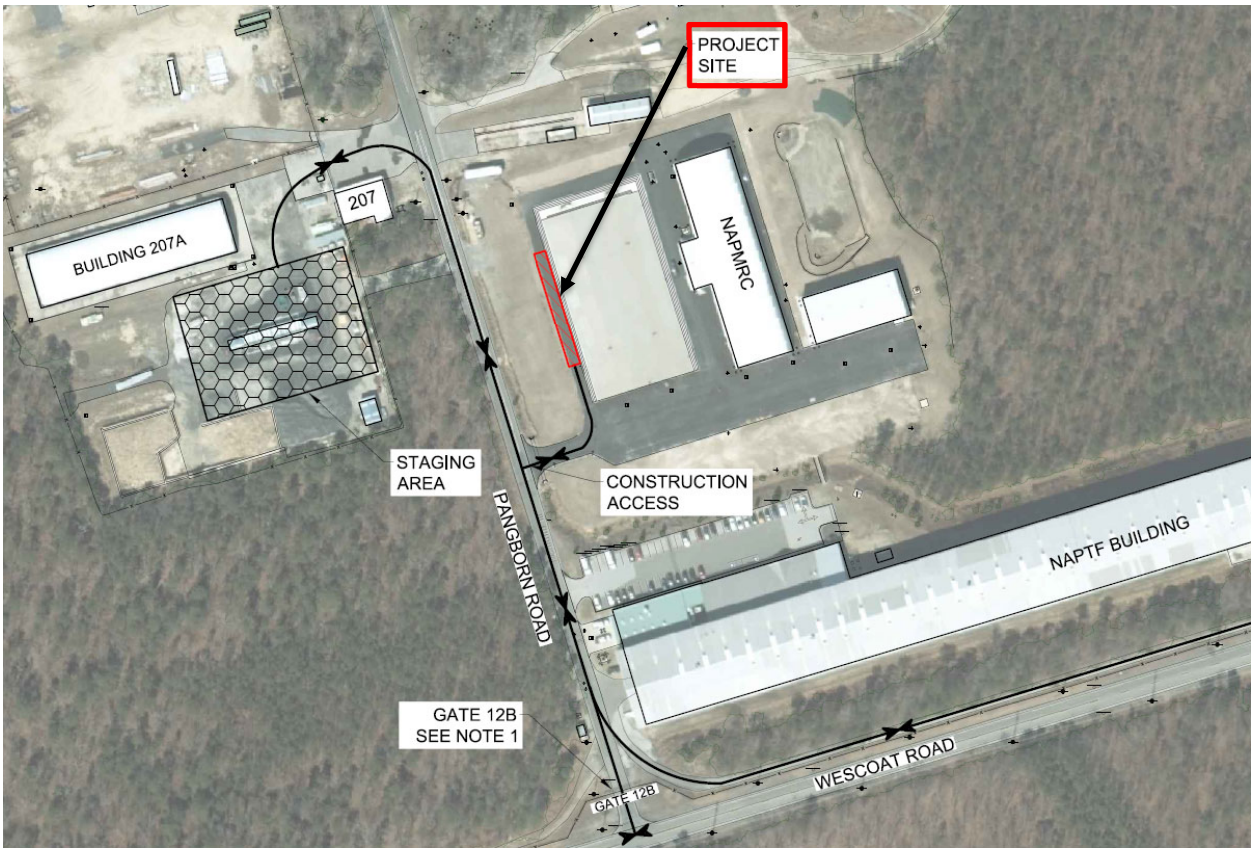

Figure 2. Project Location for Reflective Cracking Outdoor Phase 1

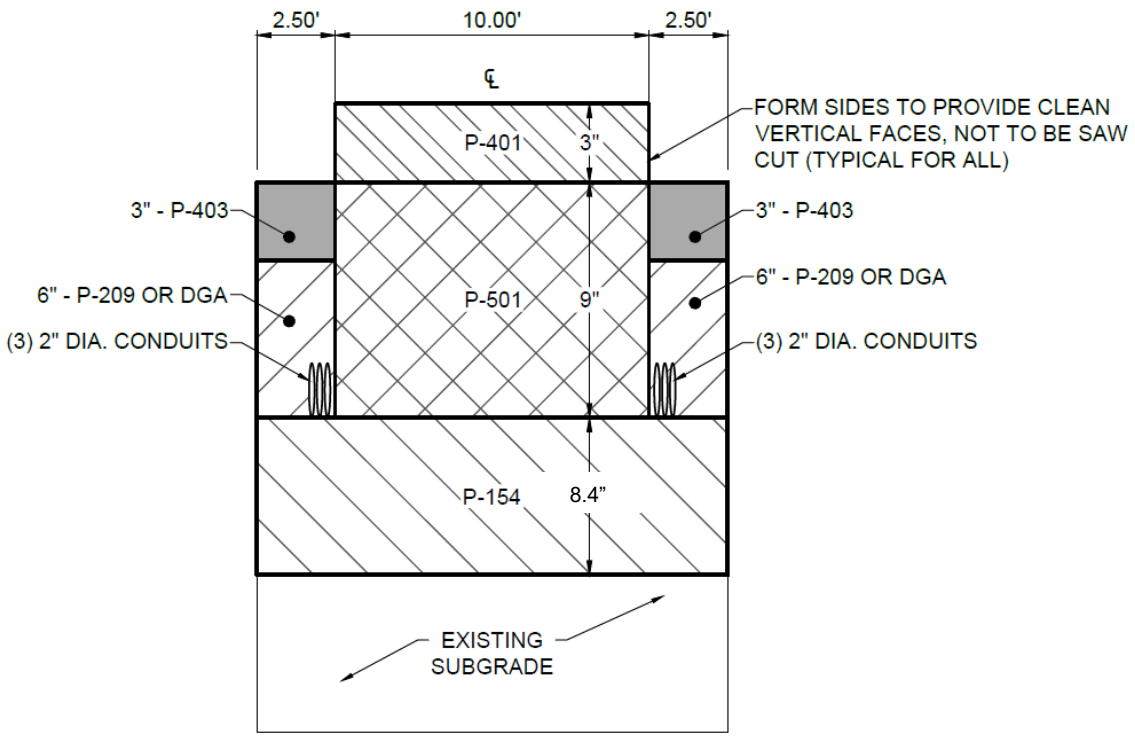

Figure 3. Reflective Cracking Outdoor Phase I, Cross-section View

The RCOP-1 test area was designed with a total of fifteen 10 ft. by 10 ft. concrete slabs (figure 4). The concrete slabs from station 0+02.5 to station 0+62.5 support the HMA for Temperature and Traffic Loads, whereas, the slabs from station 0+92.5 to station 1+52.5 support the HMA for Temperature Load only. The concrete slabs from station 0+62.5 to station 0+92.5 does not support any HMA and is included as a transition zone (figure 5). In total, the dimensions of the RCOP-1 test area including shoulder pavement were 155 ft. long by 15 ft. wide.

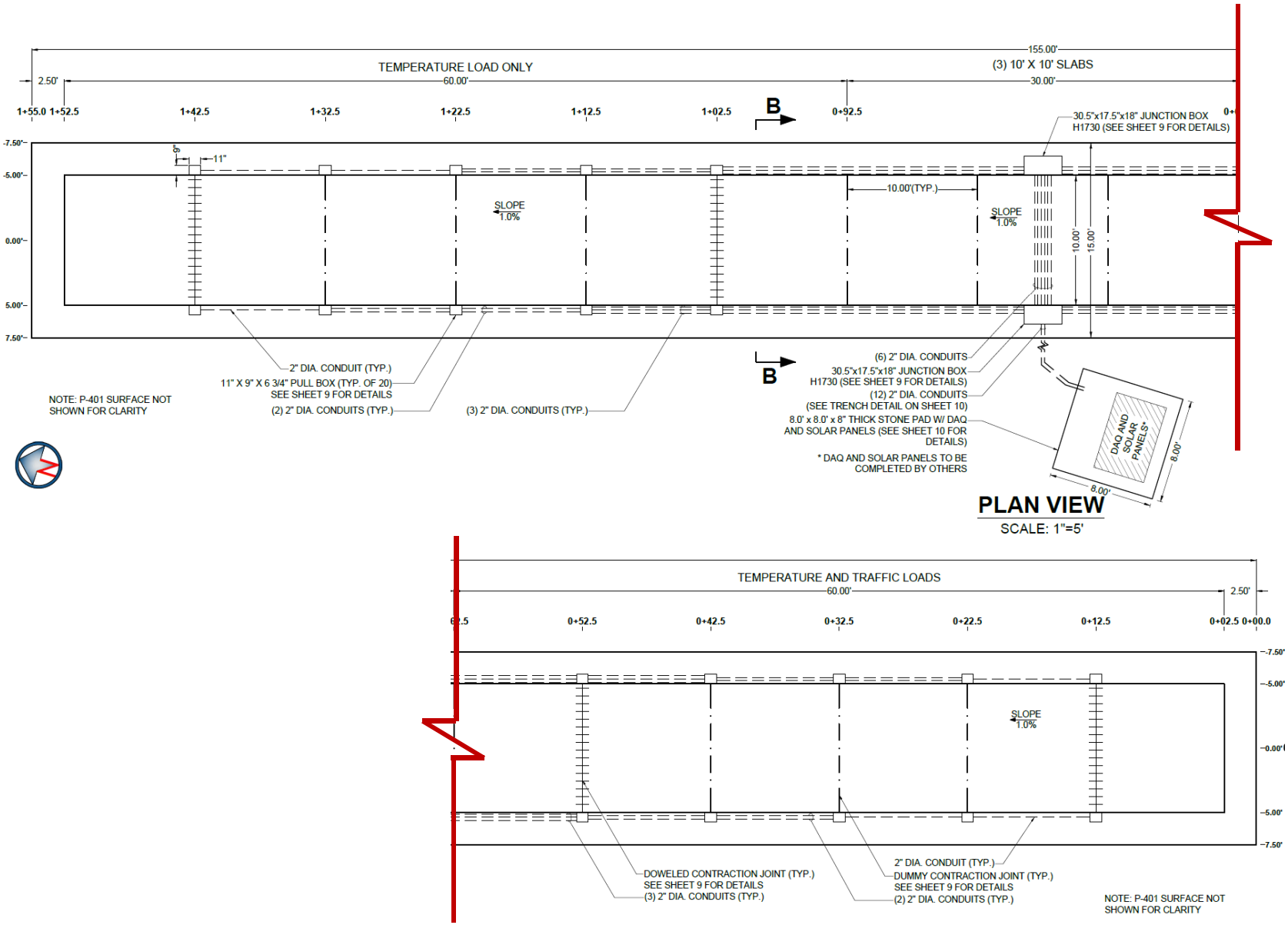

Figure 4. Reflective Cracking Outdoor Phase I, Test Item Layout

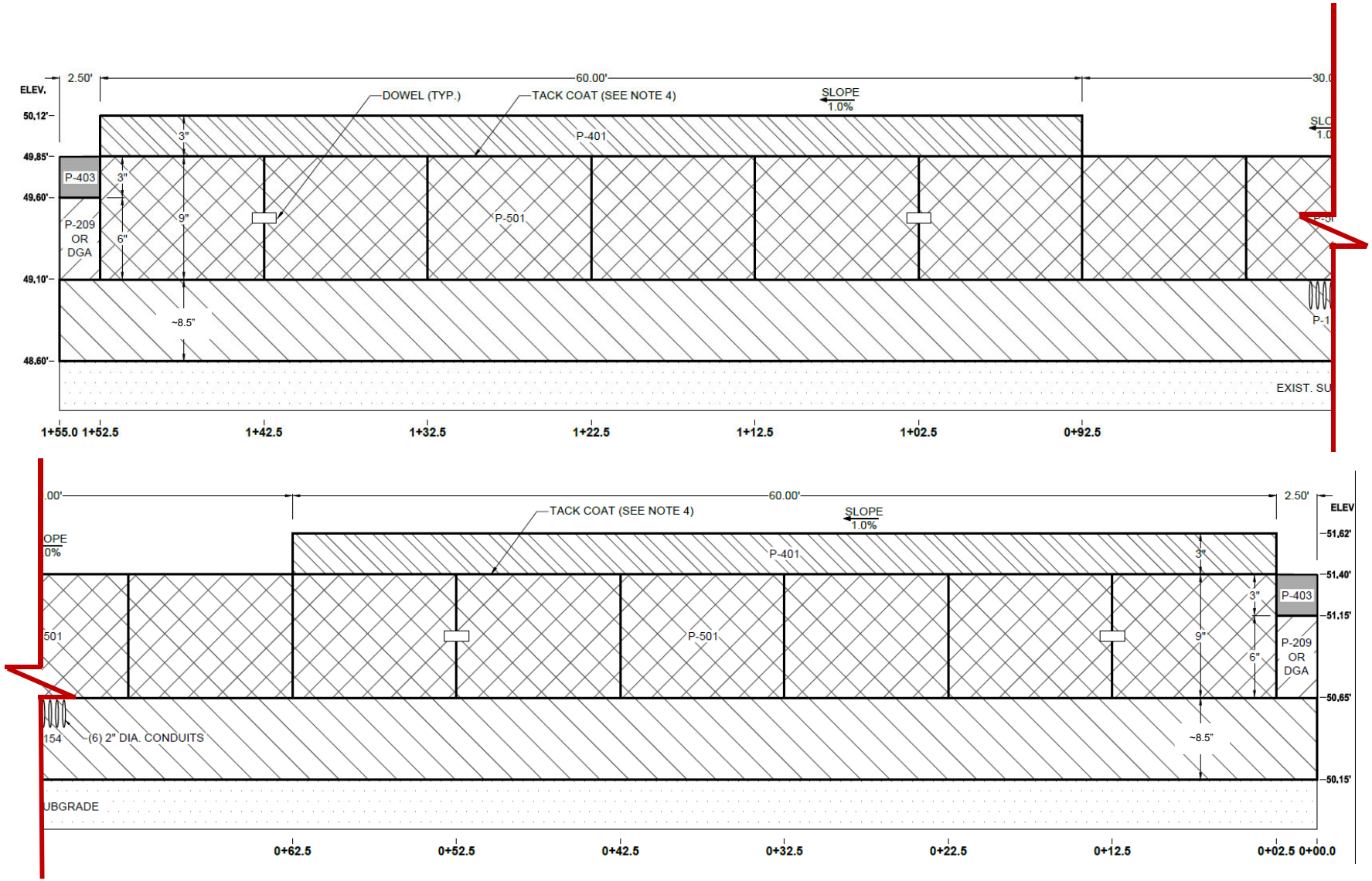

Figure 5. Reflective Cracking Outdoor Phase I, Test Item Cross-section

CONSTRUCTION RESOURCES AND SCHEDULE.

The construction of RCOP-1 required the support and services of several contractors and industry professionals. The construction team consisted of General Dynamics Information Technology (GDIT) personnel, Gemini Technologies, Inc. (Gemini), L. Feriozzi Concrete Co (Feriozzi), A.E. Stone, Inc. (AE Stone), and JBT. Material testing and sampling were completed by the FAA's NextGen Pavement Materials Laboratory. The nuclear gage density testing was conducted by Craig Testing Laboratories, Inc. (Craig), whereas, the 3D scanning for grading slope and elevation for each layer was conducted by Rodriguez Consulting, LLC (Rodriguez). The RCOP-1 Construction Plans and the RCOP-1 As-Built Plans can be found in Appendix A and Appendix B, respectively.

The construction of the test pavement started on June 18, 2018 and finished on May 22, 2019. A detailed material characterization plan is also provided in Appendix C. The specifications for the RCOP-1 construction can be found in Appendix D. The daily notes during construction are compiled in Appendix E. Table 1 shows the general timeline for the construction work per layer. No construction was done during August 2018 to November 2018, due to unavailability of P-501 construction contractor.

Table 1. Brief Timeline for Construction of Project Site Area

Item	Jun-18	Jul-18	Aug-18	Sep-18	Oct-18	Nov-18	Dec-18	Jan-19	Feb-19	Mar-19	Apr-19	May-19
Excavation of Project Site (Section 3)												
Construction of Subgrade (Section 4.2.2)												
Placement of P-154MR Material (Section 4.3.2)												
P-501 Placement (Section 4.4.2)												
P-209 Placement (Section 4.5)												
P-401 Placement (Section 4.6.3)												

EXCAVATION OF RCOP-1 PROJECT SITE AREA

The RCOP-1 construction effort started with the excavation/demolition of the project site to the existing subgrade (P-152MR). Excavation was complete over two days during June 18 and 19, 2018. The project required the excavation of existing materials to the subgrade (elevation of 48.60 ft.) and then compaction (FAA, 2018). Prior to the demolition, the site was prepared for erosion control using 200 ft of silt fence and inlet protections were installed after digging a small trench with the 'Kubota L4330HST' tractor. The excavation included the removal of existing 5 in. of HMA surface layer and 10 in. of dense graded aggregate (DGA) until reaching the existing subgrade. On June 18th, the excavation started with saw cutting of the 5-in. HMA surface using 'Multi-Quip SP1' slab saw (figure 6). Then, the 5 in. HMA surface and subsequent layers were removed using 'Hitachi ZAXIS 160CC' excavator (figure 7). A total of six truckloads (approximately 2325 sq. ft.) of HMA material was removed. Figure 8 shows a picture of exposed existing DGA. At the end of each day, the construction area was covered with plastic sheeting (figure 9).

(a) North End of the Project Site

(b) South End of the Project Site

Figure 6. Saw Cutting of Existing HMA Surface Layer

Figure 7. HMA Layer Removal

Figure 8. Exposed Existing DGA

Figure 9. Construction Area Covered with Plastic Sheeting

On June 19, 2018, the existing subbase was excavated to the specified depth/slopes confirmed by a laser level (figure 10). At this depth, Gemini discovered the interface to be a mix of existing DGA and subgrade, as shown in figure 11. The project team decided to excavate another 2 in. to a depth that would provide a clean level surface of existing subgrade and any additional excavation would be compensated by increasing the P-154MR layer thickness. A total of nine truckloads of DGA were excavated and stockpiled in the 207 yard.

Figure 10. Laser Level (RL-SV2S) Used during Excavation/Construction

Figure 11. Mix of Existing DGA and Subgrade after Excavating 10-in. of DGA

The FAA's NextGen Pavement Materials Laboratory sampled seven 5-gallon buckets from random locations (figure 12) for material characterization tests and performed ASTM D1557, Standard Test Methods for Laboratory Compaction Characteristics of Soil Using Modified Effort. The levelled subgrade is shown in figure 13.

Figure 12. Material Sampling of Existing Subgrade (P-152MR)

Figure 13. Levelled Subgrade

RCOP-1 PAVEMENT CONSTRUCTION

GENERAL.

The following sections offer descriptions of the pavement layers that were constructed for the RCOP-1 test area: P-152MR (Existing Subgrade), P-154MR Subbase Course, P-501MR Portland Cement Concrete (PCC), P-209MR or DGA shoulder, and P-401MR HMA Surface Course. Construction and material specifications were adapted from the FAA Advisory Circular 150-5370-10G and modified to reflect the construction practices and site conditions relative to the NAPMRC. These modifications are detailed within the following sections.

P-152MR EXISTING SUBGRADE.

TESTING OF EXISTING SUBGRADE.

Acceptance Testing. Nuclear Density Gauge Test, per ASTM D6938, was conducted by Craig to determine the in-place density and water content of the P-152MR. A summary of the testing results can be found in Appendix F. Testing locations were randomly generated for every 10 ft. by 10 ft. area. The maximum dry density for the material was determined by the NextGen Pavement Materials Laboratory using ASTM D1557. An elevation survey by Rodriquez using a Leica 3D scanner was conducted to ensure the final elevation of subgrade to be within 0.5 in. of the revised design elevation. The survey information is presented in Appendix F.

Characterization Testing. Lightweight Deflectometer (LWD) per ASTM E2583, Portable Seismic Pavement Analyzer for Unbound Material (D-PSPA), and Dynamic Cone Penetrometer (DCP) per ASTM D6951 tests were conducted on top of the existing subgrade at stations: 0+07.5, 0+17.5, 0+27.5, 0+37.5, 0+47.5, 0+57.5, 0+97.5, 1+07.5, 1+17.5, 1+27.5, 1+37.5, and 1+47.5 along the centerline. Further, P-152MR was collected for resilient modulus and quick shear testing per AASHTO T307. The summary of results for all P-152MR laboratory testing, per the material characterization plan, is provided in Appendix F.

Construction of Subgrade. The construction of the subgrade, laboratory testing, and field testing started on June 19, 2018 and finished on June 29, 2018, as shown in table 2. The NextGen Pavement Materials Laboratory determined the maximum dry density of the existing subgrade to be 125.7 pcf at an optimum moisture content of 8.9%. The soil classification was found as 'SM'. The existing subgrade was first compacted using the 'Dynapac CA25D' roller with vibration (figure 14). A total of 24 passes (North to South and South to North) were made. On June 21, Craig conducted the Nuclear density test using an 'Instrotek 3430' nuclear density gauge (figure 15).

Table 2. Timeline for Construction of P-152MR Layer

Item	June 2018										
	19	20	21	22	23	24	25	26	27	28	29
Modified Proctor Curve in Laboratory					*	*					
Compaction					*	*					
Field Tests					*	*					

3D Leica Scan					*	*					
Re-grade Subgrade					*	*					
Re-do 3D Leica Scan					*	*					
Re-do Field Tests					*	*					

** Weekend*

Figure 14. Compacting RCOP-1 Existing Subgrade (P-152MR)

Figure 15. Nuclear Density Gauge Test on P-152MR Layer

The results showed an average density of 96.5% of the maximum dry density and average moisture content of 12.5% which did not meet the 100% of the maximum dray density compaction requirement. Gemini performed FAARFIELD analysis assuming 9 in. P-501 on top of 8 in. P-154MR over P-152MR. Compaction requirements from FAARFIELD suggested the *in-situ* non-cohesive P-152MR be compacted to a 6 in. depth and a density not less than 95% of the maximum dry density. Although the project team considered various options to lower the moisture content of subgrade, limiting the disturbance of *in-situ* material was deemed more desirable to the research objectives of the experiment. Deviations from 100% design drawings and specifications were later reflected in as-built drawings and specifications.

Rodriguez set up the Leica 3D scanner at two separate locations with six back-sights each (figure 16) to determine surface elevations and conformance to the specifications. On June 22, field tests (LWD and D-PSPA) were conducted at the pre-determined stations, as specified in the Material Characterization Plan (Appendix C) (figures 17 and 18). Four thermocouples were also installed in the subgrade and covered with a bucket (figure 19).

(a) Leica 3D Scanner Setup (North Side)

(b) Leica 3D Scanner Setup (South Side)

Figure 16. Leica 3D Scanner Setup

Figure 17. LWD Test on P-152MR Layer

Figure 18. D-PSPA Test on P-152MR Layer

Figure 19. Thermocouple Installation on Top of P-152MR Layer

The 3D scan results revealed that a majority of the excavation was not deep enough to produce a consistent 8 in. layer of the P-154MR material. On June 27, the project site was further excavated and compacted to match a 1% slope in the North direction along with a 1% cross-slope. The 'Lee G440' power grader was used for most of the grading (figure 20) and the 'Dynapac CA25D' roller for compaction.

Figure 20. Grading of P-152MR

Initially, a dirt ramp was used to the access the excavated area. Later, metal plates were lifted into place to allow for a smaller 'Hamm HD12' roller to compact from station 0+00 to 0+10 (figures 21 and 22).

Figure 21. Temporary Ramp Placement on P-152MR

Figure 22. Compacting P-152MR between Stations 0+00 to 0+10

The final grades were also confirmed manually using a level and rod. However, the density and moisture content from Nuclear Density Gauge Test on June 28 did not meet the requirements. Therefore, an additional 41 passes were made at the project site using the 'Dynapac CA25D' roller.

After the additional compaction effort, the 95.3% of the maximum dry density and 9.9% moisture content met the requirements. Once the grade profile was confirmed, the P-152MR was accepted. Field testing was performed again.

P-154MR MATERIAL.

Sourcing of the RCOP-1 P-154MR material began in May 2018. The NextGen Materials Testing Laboratory completed modified proctor testing per ASTM D1557 and gradation to verify if it met the RCOP-1 specifications. The selected material was a dark gray poorly graded sand with silt sourced from National Paving in Berlin, New Jersey.

TESTING OF THE P-154MR MATERIAL.

Acceptance Testing. The primary testing measure was density using the Nuclear Density Gage Test (per ASTM D6938). Testing locations were randomly generated every 10 ft. by 10 ft. The target dry density was determined by the NextGen Pavement Materials Laboratory using ASTM D1557. The summary of P-154MR acceptance testing results can be found in Appendix G. An elevation survey by Leica 3D scanner was required for the final layer of subgrade material acceptance - within 3/8 in. of the designed elevation.

Characterization Testing. A summary of the P-154MR subbase material characterization testing results can be found in Appendix G. LWD per ASTM E2583 and D-PSPA tests were conducted on top of the P-154MR layer at stations: 0+07.5, 0+17.5, 0+27.5, 0+37.5, 0+47.5, 0+57.5, 0+97.5, 1+07.5, 1+17.5, 1+27.5, 1+37.5, and 1+47.5 along the centerline. Further, in-situ samples were collected for the resilient modulus and quick shear tests per AASHTO T307. The summary of results for all laboratory testing on the P-154MR material per the material characterization plan is provided in Appendix G.

Placement of P-154MR Material. Placement of the P-154MR material commenced on July 2, 2018. The construction of the P-154MR layer finished on July 26, 2018. Table 3 shows the breakdown for the construction of the P-154MR layer, including the field testing. A total of 141.35 tons of P-154MR material were delivered in six truck loads (figure 23). The materials were distributed and smoothed out on the project site using the 'John Deere 310SG' backhoe (figure 24).

Table 3. Timeline for Construction of P-154MR Layer

Item	July 2018																									Nov.
	2	3	4	5	6	7	8	9	10	11	12	13	14	15	16	17	18	19	20	21	22	23	24	25	26	14
P-154MR Material Placement			•			*	*						*	*						*	*					
Proctor Compaction Curve in Laboratory			•			*	*						*	*						*	*					
Watering and Compaction			•			*	*						*	*						*	*					
Trim to Grade After Meeting Density @ 6-in. Depth			•			*	*						*	*						*	*					
Manual Survey			•			*	*						*	*						*	*					
Trim and Skin-patch to Required Elevation			•			*	*						*	*						*	*					
3D Leica Scan			•			*	*						*	*						*	*					
Straight Edge Test			•			*	*						*	*						*	*					
Water to Adjust Moisture Content			•			*	*						*	*						*	*					
Scarify P-154MR Layer			•			*	*						*	*						*	*					
Water and Compact Scarified P-154MR Layer			•			*	*						*	*						*	*					
Manual Survey			•			*	*						*	*						*	*					
Excavate Area to Rectify Soft Spot Area			•			*	*						*	*						*	*					
Compact Excavated Area			•			*	*						*	*						*	*					
Scarify Top Layer of Excavated Area			•			*	*						*	*						*	*					
Manual Survey			•			*	*						*	*						*	*					
Trim to Grade After Meeting Density @ 8-in. Depth			•			*	*						*	*						*	*					
Manual Survey			•			*	*						*	*						*	*					
Re-do Streight Edge Test			•			*	*						*	*						*	*					
Re-do 3D Leica Scan			•			*	*						*	*						*	*					
Field Tests			•			*	*						*	*						*	*					
Field Tests (verification prior to pouring concrete)			•			*	*						*	*						*	*					

• *Holiday*
* *Weekend*

Figure 23. Unloading P-154MR Material

Figure 24. Distribution and Smoothing of P-154MR Material

Prior to compaction, six 5-gallon buckets were collected from random locations throughout the layer for laboratory characterization and to determine the optimum density and moisture content for the in-place material (figure 25). The High Performance Research Vehicle (HPRV) was used to wet the P-154MR material (figure 26).

Figure 25. P-154MR Material Sampling for Laboratory Testing

Figure 26. HPRV Used to Water the P-154MR Layer

Approximately 1,000 gallons of water was sprayed onto the material surface in short bursts to allow for absorption throughout the P-154MR layer. After the initial grading, the 'Dynapac CA25D' roller was used for compacting the layer in a single lift. The compacted lift was initially 1 in. thicker than the design. Craig used the Nuclear Density Gage to determine the density and moisture content readings (figure 27), which were found dry of optimum; hence, the HPRV was used again to spray 75 gallons of water between stations 0+60 and 1+20 that had shown low moisture content (figure 28). It should be noted that the Proctor compaction curve used to check the density at this time was the one created during sourcing of P-154MR material and not from the in-place P-154MR material. The old Proctor compaction curve was used to not delay the construction, anticipating that the new Proctor compaction curve would be similar. The testing results after compaction still did not meet the specifications.

The next day (July 3, 2018), the Nuclear Gage was used to determine the *in-situ* moisture of the P-154MR layer (using the old Proctor compaction curves). Then the amount of water needed to be added in field was calculated. The first addition of 115 gallons of water was sprayed on the P-154MR layer followed by 8 passes of the 'Dynapac CA25D' roller. The HRPV then sprayed another 65 gallons of water, followed by another 8 passes of the 'Dynapac CA25D' roller. The 'CAT PS300C' roller was also brought onsite and rolled 6 passes (figure 29). The density was found >100% of the target maximum density in the first half area. However, the density was ~97% in the latter half with less moisture (~4%).

Figure 27. Nuclear Density Gauge Test on P-154MR Layer

Figure 28. Watering P-154MR layer using the HPRV

Figure 29. Compacting the P-154MR layer using the 'CAT PS300C Roller'

Density and moisture readings were taken at 10 in. depths at random locations. After several tries of rolling and adding water, the target density was still not met at a few locations. On July 5, 2018, the NextGen Materials Testing Laboratory provided the target moisture content and density derived from the modified proctor testing conducted on the in-place P-154MR material. The maximum density and moisture content were 130.8 pcf and 7.2%, respectively. Sand cone readings were taken at Station 0+20 offset 0, Station 0+46 offset 0, Station 1+02 offset 0.5, and Station 1+33 offset 0.5 (figure 30). The average dry density was 142.75 pcf with an average moisture content of 4.8%. A 6 in. depth for the Nuclear Density test was recommended by Craig and gave an average dry density as 132.6 pcf (101.3%) with an average moisture content of 4.5%. The next day (July 6, 2018), the P-154MR surface was graded using the 'Lee G440' and 'RL-SV2S' laser leveling system (figure 31).

Figure 30. Sand Cone Test on P-154MR Layer

Figure 31. Grading of P-154MR Layer

However, due to heavy rain, the grading could not be finished on the same day. Once the grading was completed the next day, the site was manually surveyed to confirm the final grade elevations. A few areas were found outside the tolerance of the specifications. The grade was low between

station 1+10 and station 1+40; and was high between station 0+00 and station 0+20. The 'ZAXIS 160LC' excavator was then used to trim/cut these areas. In one of the areas that were below the desired elevation, the P-154MR material was added from the stockpile and then rolled and smoothed using a 'HAMM HD12' roller. The elevations were again verified using the Leica 3D scanner once the grading was completed.

On July 10, 2018 straightedge testing was performed on the P-154MR layer (figure 32) and found that 21 out of 25 readings passed the 3/8 in. tolerance (84%). The density and moisture content readings were again checked using the Nuclear Density Gage. This time these readings were taken at a depth of 8 in. The average density was found to be 98.1% of the maximum dry density and the average moisture content was 2.5%. The project team used the HPRV to add 1,300 gallons of water. The 'BOMAG' soil stabilizer was also bought onsite for the next day.

Figure 32. Straightedge Testing on P-154MR Layer

On July 12, 2018, the project team decided to re-work the P-154MR layer. Further, the FAA recommended the density and moisture to be taken at full-depth (i.e., 8 in.). Moisture samples were taken to fill one 5-gallon bucket at random locations (figure 33). Craig took the moisture and density readings at six random locations, at a depth of 4 in., 6 in., and 8 in.—station 0+35 offset -1, station 0+60 offset 0, station 0+75 offset 3.5, station 0+95 offset -2.5, station 1+04.5 offset -2, and station 1+32 offset 3.5. These moisture readings were taken in order to estimate the amount of water required to be added to the P-154MR layer.

Figure 33. Collection of Moisture Sample from P-154MR Layer

Once the moisture readings were taken, the P-154MR layer was sprayed with water using the HPRV prior to tilling. The 'BOMAG' soil stabilizer was used to scarify the entire lift of P-154MR layer to an average depth of 4 in. (figure 34). Once, the layer was scarified, an additional 450 gallons of water was sprayed. The 'John Deere 310SG' backhoe was used to place excess P-154MR that was stored onsite. The 'Lee G440' grader was then used to roughly grade the surface.

Figure 34. Using BOMAG Soil Stabilizer to Scarify P-154MR Layer

A manual survey, at the five lowest points, was conducted to see if more filling was necessary before compaction. More materials were first added in the spots with slightly lower elevations. About 350 gallons of water were then sprayed on top of the surface and the area was covered with a tarp sheet so the water could penetrate into deeper depths. After an hour, the P-154MR layer was compacted using the 'Dynapac CA25D' roller for 2 passes and another 2 passes with the 'CAT PS300C' roller. Once the compaction was done, Craig checked the density and moisture using the Nuclear Gage. The P-154MR layer was found to be too wet; some areas were very soft, hence, the project site area was covered and allowed to dry overnight.

The next day, the moisture content for the P-154MR layer was taken by the NextGen Materials Testing Laboratory and found to be around 9-12%. It was decided to let the layer dry for a couple of hours before compacting it. The density and moisture content were later checked using the Nuclear Gage at random locations. The moisture was still found to be high (7.5-10%). After letting the layer dry more, two passes were made each by the 'Dynapac CA25D' roller and the 'CAT PS300C' roller. The densities were then checked every 10 ft. by 10 ft. at random locations. The densities were checked at 4 in., 6 in., and 8 in. depths. After initial testing at two locations, it was found that the densities were in the ~99% range, so the layer was rolled again for four more passes. The average maximum dry density and average moisture at 8 in. depth was found to be 100% (6 spots below 100%) and 8.1%, respectively. The following Monday (July 16, 2018), the P-154MR layer was compacted for 2 more passes each by the 'Dynapac CA25D' roller and the 'CAT PS300C' roller. Two moisture samples from random locations were also taken by the NextGen Materials Testing Laboratory to further evaluate the moisture content. Results from the test yielded values of 8% and 10.1%. Due to the unavailability of Craig on the same day, the moisture content and density readings were checked the next day at depths of 4 in., 6 in., and 8 in. The densities were first checked at the 6 locations which did not pass previously. Once the densities and moisture content readings passed the requirements, the remaining 10 ft. by 10 ft. locations were tested at the 8 in. depth only.

However, there was one soft spot, around station 0+89 (figure 35). A trench was dug to help drain the water and reduce pumping in that area. The trench reached 22 in. below the P-154MR surface and was approximately 2.5 ft. wide. A small section of P-154MR (from station 0+86 offset -0.5 to station 0+92 offset -3.5) was excavated using a 'John Deere 310 SG' backhoe due to the pumping issues (figure 36). The area was excavated down to the subgrade to determine if it was holding water, which it did not show any signs of. The excavated P-154MR material was then spread out to facilitate drying before it was placed back (figure 37). Once the material was dried to optimum moisture, the P-154MR material was placed back (figure 38) and compacted for 5 passes using the 'CAT PS300C' roller.

Figure 35. Soft Spot/Pumping Location in the P-154MR Layer

Figure 36. Excavated Area Due to Pumping Issue in the P-154MR Layer

Figure 37. Drying of Excavated P-154MR Material

Figure 38. Filling Back the Excavated P-154MR

Elevation of the low spots after compaction was surveyed and found still low. Therefore, the top layer was scarified again, and additional materials were added. The area was then compacted for 5 passes each with by the 'Dynapac CA25D' roller and the 'CAT PS300C' roller. Both density and moisture content were found below target values. The area was then compacted using an 'MQ

Mikasa MTX70' hand tamper (figure 39). This time, the moisture content and density were 7.6% and 101.3% of the maximum dry density, respectively. Due to excessive rain/thunderstorm from the previous evening, a trench was dug at the North-West corner of the project site in order to help drain the low point and prevent future ponding during construction (figure 40). The trench was 25 ft. long by 12 in. wide with an average depth of 12 in. Three check dams were also added to the trench to help with the collection of silt/debris. Any additional water at the project site was removed using a pump (figure 41). Once the weather was better, elevation readings were taken using the 'Pentax AI-320' level every 10 ft. increments to determine grade conformance (figure 42).

Figure 39. Compacting the Excavated Area in the P-154MR Layer

Figure 40. Digging out Trench at North-West Corner of the Project Site Area

Figure 41. Pumping of Water from the Project Site Area

Figure 42. Manual Survey Using 'Pentax AI-320 Level'

The P-154MR layer was graded on July 19, 2018, using 'Lee G440' power grader along with the 'RL-SV2S' system. Numerous passes were made to remove up to 1/8 in. of material with each pass. 'Pentax AL-320' level measurements confirmed that the elevations were above grade and within tolerance. The 'John Deere 310SG' backhoe was then used to trim the P-154MR at each end of the project site, which was inaccessible to the 'Lee G440' power grader. After trimming was completed and verified, the 'Dynapac CA25D' roller was used to smooth the surface without vibration. A full survey was performed every 5 ft. by 5 ft. increment and all values were found to be within tolerance. Rodriguez performed the Leica 3D scan on the final P-154MR layer. The west shoulder was cut to provide the full 15 ft. width as per construction plans and the material was pulled back to the silt fence using the 'ZAXIS 160LC' excavator.

The straightedge test was then performed, and 18 out of 20 passed the 3/8 in. tolerance (90%). The Leica 3D scanner was used to perform another scan of the P-154MR surface because the west side was not shown in the previous scan due to excess material being stored in the shoulder area. Once the P-154MR layer was finally accepted by the FAA, field tests (LWD, DCP, and D-PSPA) were carried out. Moisture content samples were also collected at the same time. Figure 43 shows the DCP test at the P-154MR surface.

Figure 43. DCP Test on Top of P-154MR Surface

Preliminary review of the DCP test data suggested much higher CBR values for P-152MR. Therefore, on July 26, 2018, the DCP tests were conducted directly on top of the P-152MR layer by drilling a pilot hole. The drill hole was larger in diameter than the tip of the DCP, as seen in figure 44. After initial testing, it was concluded that the CBR values derived from the revised method were more reasonable. Therefore, the full set of DCP tests were repeated with the revised method. Later, these drilled holes were backfilled with P-154MR and the construction of P-154MR layer was concluded on July 26, 2018.

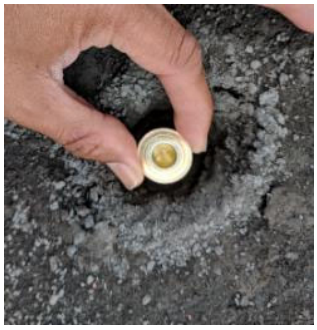

Figure 44. Pilot Hole Drilled for DCP Test on Top of P-152MR Surface

The LWD and D-PSPA tests were again conducted on November 14, 2018 to verify the test results prior to pouring concrete. A summary of the testing results can be found in Appendix G. Further, Nuclear Density testing was conducted on the same day at four locations to determine the *in-situ* density and moisture content. The average moisture content and average dry density at these four locations were found to be 7.1% and 134.9 pcf, respectively.

P-501MR PORTLAND CEMENT CONCRETE (PCC) LAYER.

The P-501MR material used for RCOP-1 was the same as used in Construction Cycle 8 (900 Flex Mix Design). The mix design is provided in Appendix H. The formwork for concrete was installed on December 3, 2018, as shown in figure 45. The length of the formwork was 150 ft. per survey (between station 0+02.5 and station 1+52.5) and the width was 10 ft. The thickness of the formwork was measured at three different locations over 10 ft. intervals and was found to vary between 8.63 in. to 9.00 in., which was within the specifications. The dowel bars and baskets were epoxy coated and were 1 in. in diameter with a length of 18 in. The clearance between the dowels was 12 in. and the distance from the top of P-154MR to the center of dowel was 4.5 in., as shown in figure 46. During the installation of the formwork, the thermocouples were also installed on top of the P-154MR layer. as per the construction plans (figure 47).

Figure 45. Formwork for Concrete on Top of P-154MR Layer

Figure 46. Doweled Contraction Joint

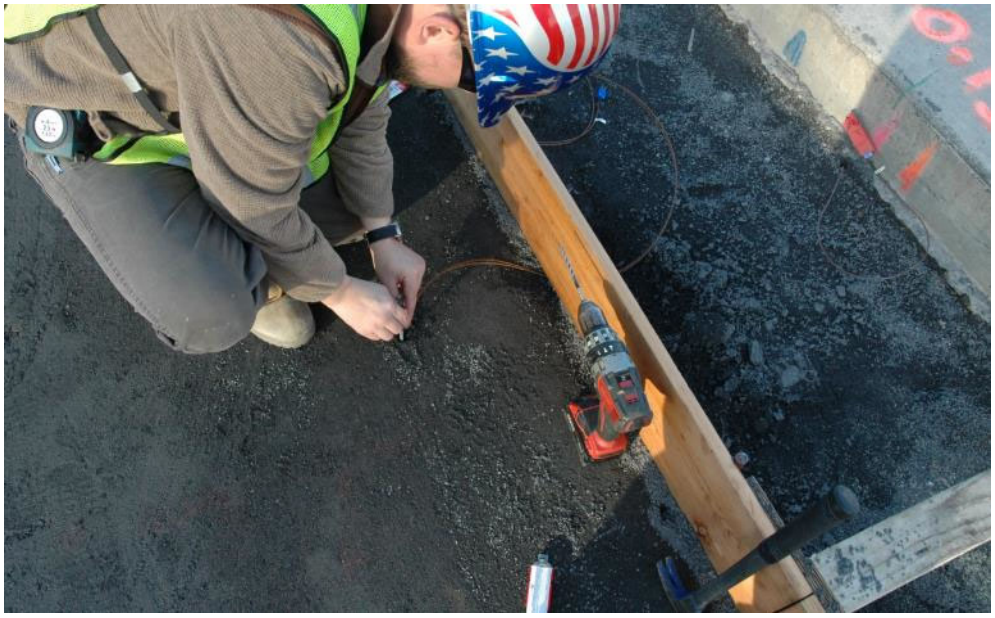

Figure 47. Installation of Thermocouple on Top of P-154MR Layer

TESTING OF THE P-501MR MATERIAL.

Acceptance Testing. The primary tests for acceptance were slump per ASTM C143, air content per ASTM C173, unit weight per ASTM C138, and concrete temperature per ASTM C1064. The summary of P-501MR acceptance testing results can be found in Appendix I.

Characterization Testing. A summary of the P-501MR PCC material characterization testing results can be found in Appendix I. Field testing (Heavy Weight Deflectometer [HWD] per ASTM D4694 and PSPA tests) was conducted on top of the P-501MR layer. Further, laboratory samples were collected to conduct free-free resonant frequencies per ASTM C215, compressive strength per ASTM C39, flexural strength per ASTM C78, elastic modulus per ASTM C469, and coefficient of thermal expansion (CTE) per AASHTO T336 tests on 28-day cured specimens. Field samples were also collected to conduct flexural strength tests, per ASTM C78, on 14- and 28-day cured specimens.

P-501MR Placement. The next day (December 4, 2018), 48 cubic yards of concrete was poured into the formwork, which was supplied by Feriozzi. Material acceptance testing and characterization were first completed on-site by the NextGen Materials Testing Laboratory personnel (figures 48 to 50). A total of twelve beams, six 6 in. by 12 in. cylinders, and ten 4 in. by 8 in. cylinders were collected for material characterization in the laboratory. Further, twelve beam samples were also collected for field curing and to check the flexural strength of in-place P-501MR material after 14 days and 28 days of curing. Four replicates were tested for each curing time. It should be noted that the acceptance testing was conducted within 5 minutes and the beams/cylinders were made within 15 minutes of obtaining the sample. Once the acceptance testing was done, the P-501MR was placed in the test area (figure 51). The results of the acceptance testing are provided in Appendix I. Table 4 shows the amount of P-501MR material placed per truck. The placement location of the P-501MR material is also shown in table 4. Common masonry

hand tools and a vibratory screed were used by the contractor to complete the P-501MR placement. The instrumentation was monitored and protected by the project team during the placement. Per discussion with the FAA, the P-501MR surface finish was changed from a burlap surface finish to a broom surface finish (figure 52). Figure 53 shows the finished P-501MR layer. A saw was then used to do the saw cuts in the P-501MR layer (figure 54).

Figure 48. Acceptance Testing on P-501MR Material (Slump Test)

Table 4. P-501MR Placement per Truck

Truck	Amount (CY)	Location Covered Slab	
		Begin Station	End Station
1	10	1+20	1+52.5
2	10	0+87.5	1+20
3	10	0+55	0+87.5
4	10	0+22.5	0+55
5	6	0+7.5	0+22.5
6	2	0+2.5	0+7.5

Figure 49. Acceptance Testing on P-501MR Material (Air Content Test)

Figure 50. P-501MR Material Sampling

Figure 51. P-501MR Material Placement

Figure 52. P-501MR Surface Finishing

On December 12, 2018 (after 7 days of curing), the formwork for the P-501MR layer was removed. The next day, the joints were saw cut and sealed per the construction plans. Figure 55 shows the saw cuts and the sealing operations done on the joints.

Figure 53. Finished P-501MR Layer

Figure 54. Saw Cuts on P-501MR Layer

Figure 55. Joint Saw Cut and Sealing

Once the P-501MR concrete was cured for 28 days, field tests (HWD and PSPA) were carried out on January 3, 2019. Figures 56 and 57 show the HWD and PSPA tests on the P-501MR layer. A summary of the testing results can be found in Appendix I.

Figure 56. HWD Test on P-501MR Layer

Figure 57. PSPA Test on P-501MR Layer

P-209MR SHOULDER.

Prior to placing and compacting the P-209MR material, a meeting was held on March 25, 2019 to discuss the work plan for the shoulder work. GDIT and AE Stone personnel covered the conduits with P-154MR material (tolerance: ±1 inch) and compacted the P-154MR material on top of the conduit (figure 58). A new silt fence was also installed, as seen in figure 59, and the swale limits were established.

(a) Placing P-154MR Material (b) Compacting P-154MR Material

Figure 58. P-154MR Placement and Compaction in the Shoulder Area

58.32 tons of P-209MR material were delivered to the project site on April 3, 2019 and stored near the south side of the project area (figure 60). The material was not stored in the 207 material processing building as there was an electric cable running above the ground in the 207 building and no vehicles were allowed to run over it. The next day, AE Stone personnel removed the dirt and graded the shoulder edge on the west side of the PCC slabs. The P-209MR material was then placed all around the concrete slabs and compacted using the plate compactor. The P-209MR material was placed such that it was 3 inches below the edge of the P-501MR layer. Figure 61 shows the finished P-209MR surface at the end of the day.

Figure 59. New Silt Fence

Figure 60. P-209MR Material being Stored near the Project Area

Figure 61. Compacted P-209MR Shoulder

The maximum density and moisture content for the P-209MR shoulder material was 162.8 pcf and 5.4%, respectively, as determined in the laboratory. On April 5, 2019 Nuclear Gage testing was used to determine the field density and moisture content on the P-209MR shoulder. Testing was done at four random locations. The P-209MR shoulder was watered to meet the requirements. The average density was found to be 90.3% of the maximum dry density and the average moisture content was 3.7%. Once the P-209MR shoulder met the acceptance requirements, 24.89 tons of HMA (PG 64-22) were installed all around the concrete slab (figure 62). The plate compactor was used to compact the HMA material on top of the P-209MR shoulder. The Nuclear Gage was then used to verify the compaction requirements for the HMA material. Testing was done at four random locations and the average density was found to be 92.4% of the maximum dry density. The results of the acceptance testing and a summary of laboratory testing results on the P-209MR and the HMA material are provided in Appendix J.

Figure 62. Compacting HMA on top of P-209MR Shoulder

On April 18, 2019, the west side of the project area (between the concrete slab and the DAQ) was graded (figure 63). The swale on the west edge of the slab was also reconstructed.

Figure 63. Grading the West Side of Project Area

P-401MR HOT-MIX ASPHALT (HMA) SURFACE LAYER.

A mix design using a PG 64-22 binder (which was used in RC Indoor Phase V project) was selected for the project. The mix design was initially submitted on December 12, 2016 and was verified again on August 8, 2018. The approved mix design can be found in Appendix K. The formwork for paving the P-401MR mix was constructed between April 25 and April 29, 2019 and the tack coat (PG 64-22 asphalt binder) and was sprayed on the paving area (except the transition area) on April 29, 2019 (figure 64).

Figure 64. Tack Coat Spray on RCOP-1 Project Area

TESTING OF THE P-401MR MATERIAL.

Acceptance Testing. Nuclear Gage Density Tests were conducted by Craig to determine the density of the P-401MR layer. A summary of the testing results can be found in Appendix L. Testing locations were randomly generated every 10 ft. by 10 ft. An elevation survey by Leica 3D scanner was also conducted and is presented in Appendix L.

Characterization Testing. A summary of the P-401MR HMA loose mix verification test results can be found in Appendix L. Field testing involved PSPA tests, per the material characterization plan, on top of the P-401MR layer. However, as the PSPA equipment was not

functional after the P-401MR layer was paved, it was excluded from testing. Further, field core samples were also collected to conduct HMA material characterization testing.

P-401MR Placement. The construction of the RCOP-1 test area required the placement of approximately 75 tons of P-401MR HMA which occurred on April 30, 2019. The P-401MR lift was placed in a single lift directly upon the underlying P-501MR layer at a compacted thickness of 3 inches in the 10-foot-wide paving lane. The paving operation began at the north end of the project area and proceeded towards the south side. The HMA material was first transferred to a Roadtec SB-2500e Material Transfer Vehicle (MTV) from the truck, the MTV then supplied the HMA to the paver (figure 65). The Roadtec SB-2500e MTV was operated parallel to the paving area on the east side. Prior to spreading the HMA material using the paver, the project team covered the installed embedded sensors (on top of P-501MR) with the HMA material using shovels (figure 66).

The P-401MR lift was rolled with a Caterpillar 102 Roller using vibratory passes (vibration was used per FAA's direction), as shown in figure 67. The density of the HMA layer was monitored using the Nuclear Densometer (figure 68) by the contractor's quality control technician (Craig). The rolling operation continued as needed until field densities met the P-401MR specification. The compaction was a combination of a single roller as well as two rollers simultaneously compacting the P-401MR layer. It should be noted that the wooden formwork used around P-401MR layer started tilting outward after a few passes, possibly due to strength limitation of the wood used in the formwork. Towards the end, a smaller roller was used to compact and finish the P-401MR layer (figure 69). The P-401MR layer achieved an average density of 95.5% after a total of 10 passes. The detailed test results of the field density are presented in Appendix L.

(a) HMA Material Being Transferred to the Roadtec SB-2500e MTV from the Truck

(b) HMA Material Being Transferred to the Paver from the Roadtec SB-2500e MTV

Figure 65. P-401MR HMA Material being Transferred for Paving

Figure 66. Covering Embedded Sensors with HMA Material

Figure 67. Compacting the P-401MR Lift using Caterpillar Rollers

Figure 68. Nuclear Densometer Test on the Compacted P-401MR Lift

Figure 69. Compacting the P-401MR Lift using a Smaller Roller

A NextGen Materials Testing Laboratory technician was present at the plant during the paving to witness the sampling and testing of the plant material prior to shipment. Loose HMA samples were also obtained from the plant during the paving operation for verification and HMA characterization testing in the materials laboratory. The P-401MR mix verification was conducted at the plant (AE Stone) as well as in the NextGen Materials Testing Laboratory. The test results are summarized in Appendix L. After compaction, core samples were extracted from the transition areas for density acceptance testing and the results are summarized in Appendix L. The final compacted P-401MR layer is shown in figure 70. Due to the issue of compacting the P-401MR layer, a distress survey was conducted on May 13, 2019 and the results are included in Appendix L.

Figure 70. Final P-401MR Lift

The edges of the P-401MR layer were saw cut on May 22, 2019 to create a smooth vertical edge as per the construction plans. The sensor wire paths embedded inside the P-401MR did not follow

any specific pattern. Some of the sensor wires at the west end got cut during the saw cutting process as it was difficult to guess the pathways of the sensor wires from the top of P-401MR. Later on, the cut sensor wires were examined and instrumentation team managed to salvage couple of the sensor wires by splicing. PSPA testing on top of the P-401MR layer was not conducted per the Material Characterization plan as the equipment was not functional.

Figure 71. Saw Cutting the P-401MR Edges

INSTRUMENTATION.

Several sensor types were installed in the RCOP-1 project to meet the test objectives. In all, over 120 gages (20 Embedded Dynatest Gage [EG], 20 Joint Displacement Gage [JDG], 10 Joint Opening Gage [JOD], 24 Thermocouple [T], and 80 Surface Strain Gage [SG]) were installed consisting of various sensor types including thermocouples, asphalt surface strain gages, joint displacement gages, and embedded H-bar strain gages. The full set of instrumentation plans and as-built plans can be found in Appendix A and Appendix B, respectively. The cut sheets of all materials used in construction can be found in Appendix M.

On November 14 and 19, 2018, the instrumentation trench was dug in the P-154MR layer to route the interconnecting cables for the Data acquisition (DAQ) system. Conduits were installed under the concrete slab section for the cable installation (figure 72). Once the conduits were installed, the trench was backfilled with P-154MR material and then compacted using the Plate Vibrator (figures 73 and 74). Per FAA's direction, field density was conducted on the installed conduits. The FAA requested the field density to be between 90-95% of the maximum dry density.

Figure 72. Trench Digging and Conduit Installation in P-154MR Layer

Figure 73. Backfilling Installed Conduits Trench with P-154MR Material

Figure 74. Compacting the Trench using the Plate Vibrator

After a meeting between the project team and the FAA regarding the trench, a decision was made to consider the instrumentation conduit as an electric conduit; hence to bury it 17 in. from the top of the concrete slab and fill it with concrete. Thus, the instrumentation trench was dug/excavated, and the conduits were removed (figure 75). The trench was also widened to 40 in. as the chairs for the six conduits would be 33 in. wide. Then, the trench was compacted with a plate vibrator and a hand tamper (figure 76). Nuclear gage density tests were conducted in the trench at station 0+77.5 offset 3 ft., station 0+77.5 offset 7.5 ft., and station 0+77.5 offset 12 ft (figure 77). The average value for the maximum dry density at these three locations was found to be 91%. On November 28, the chairs for conduits under the concrete slab were installed from the edge of the concrete slab to the DAQ.

Figure 75. Excavating the Conduit Trench in the P-154MR Layer

Figure 76. Compacting the Trench at Bottom using the Plate Vibrator

Figure 77. Nuclear Gage Density Test on Top of the Conduit Trench

On December 12, 2018, the formwork for the P-501MR layer was removed after 7 days of concrete curing. Once the formwork was removed, the next day, the vertical edge surface was prepared for the joint displacement gage sensor installation (figure 78). On December 14 and 17, the junction boxes along with trench conduits were installed, and the material was filled around the boxes (figures 79 and 80). The thermocouples were also connected as seen in figure 81. The joint displacement gages were also installed at the same time (figures 82 and 83). Once the junction boxes were installed, the trench conduits connecting to the DAQ were filled with P-154MR material (figure 84).

Figure 78. Vertical Edge Gage Sensor Surface Preparation for the Displacement Gages

Figure 79. Installation of Junction Boxes and Trench Conduits

Figure 80. Open Junction Box

Figure 81. Installing Thermocouples and Storing in the Junction Box

Figure 82. Installation of Joint Displacement Gage

Figure 83. Framework for Joint Displacement Gage Installation

Figure 84. Backfilling Trench Conduits with P-154MR Material

On December 26, 2018, the pad for the DAQ solar cabinet was constructed. The forms were installed and were lined with plastic to keep vegetation from growing. Then, P-209MR material was placed inside the formwork and compacted (figure 85). The DAQ solar cabinet was then placed into position (figure 86) and a 10 feet grounding rod was installed next to the formwork so that the cabinet would be grounded.

Figure 85. Pad for DAQ Solar Cabinet

Figure 86. DAQ Solar Cabinet Installation

Blue thermocouple trunk lines were pulled through the conduit up to DAQ solar cabinet and reconnected as seen in figure 87(a). Thermocouple readings were then monitored through Wi-Fi connection to the instrumentation lab. Over the next couple of weeks (December 27, 2018 to January 9, 2019), all other trunk lines for sensor inputs were pulled from the junction boxes directly

to the DAQ solar cabinet (figure 87[b]). The rigid conduit was connected to the DAQ with the use of flexible conduit (figure 88). Joint displacement gages were installed and connected.

(a)

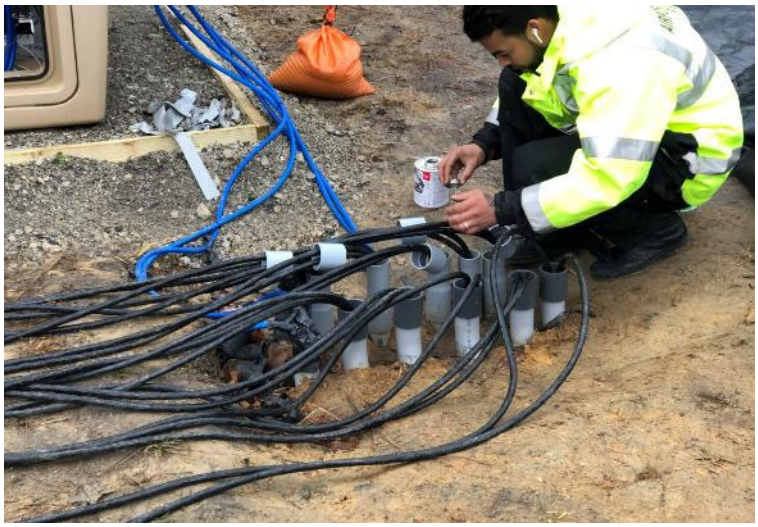

(b)

Figure 87. Blue Thermocouple Trunk Lines and Black Sensor Truck Lines Installation

(a) Installation

(b) Complete Installation of Flexible Conduits

Figure 88. Flexible Conduits Installation

On March 4 and 5, 2019, all the sensors, connectors, and wiring cables were sealed. On April 4, 2019, GDIT personnel removed the joint seal, about 1 foot on each side of the centerline (figure 89). The joint was deepened to an average depth of 3 inches. Over the next few days (April 5-8), sensors prepared by the FAA were installed in the joint and the wires were connected to the edge boxes (figure 90). The joints were sealed as the FAA sensors installation was completed.

Figure 89. Removal of 1-foot Joint Seal (Center of Each Joint)

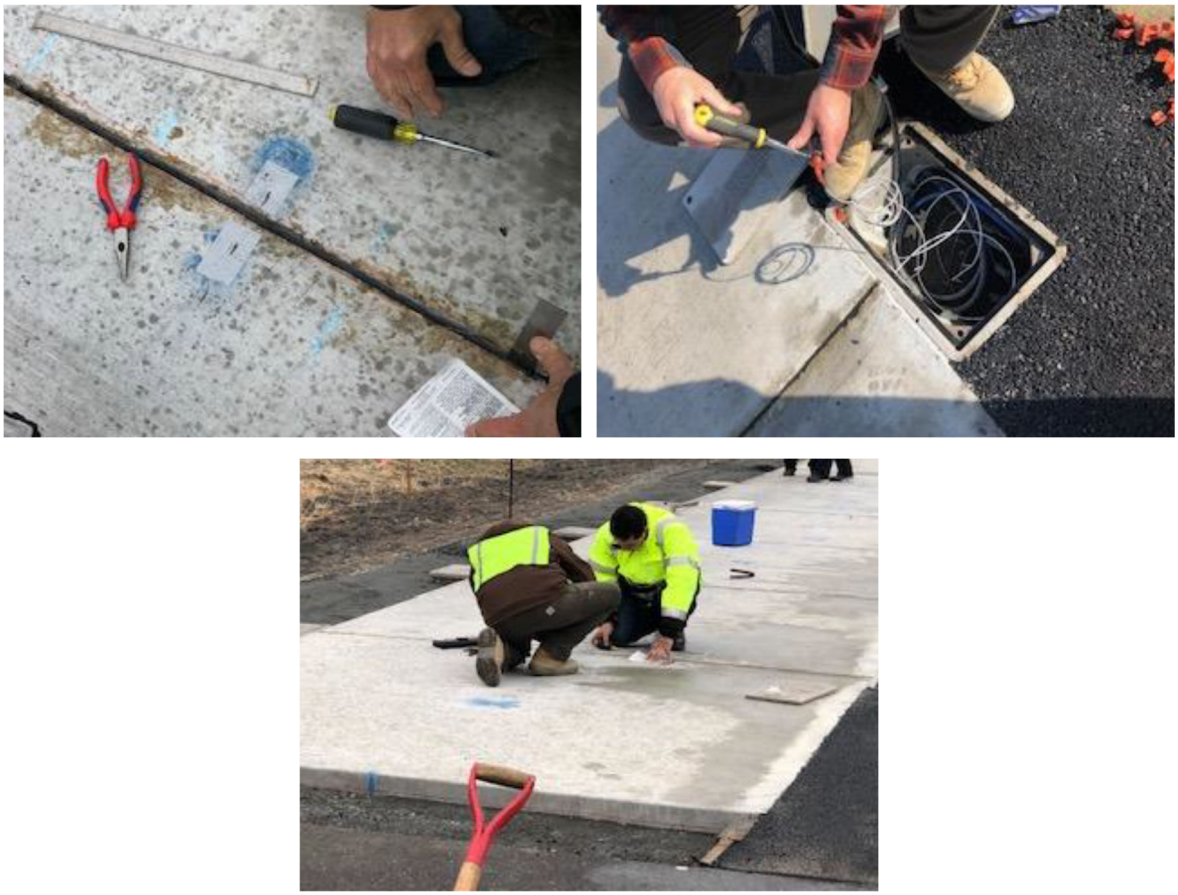

Figure 90. Installation of FAA Sensors

On April 9-10, 2019, the embedded sensors were connected to the electric box which was 2 feet away from the joint (figure 91). The conduit was first installed with the metal tip attached to the electric box. The joints between the conduit and concrete slab, and between the electric box and the concrete slab, were sealed using a non-sag joint sealant (figure 92). The location of the embedded sensor was then marked on top of the joints (figure 93). The next day, thermocouples were installed on top of the P-501MR layer as seen in figure 94.

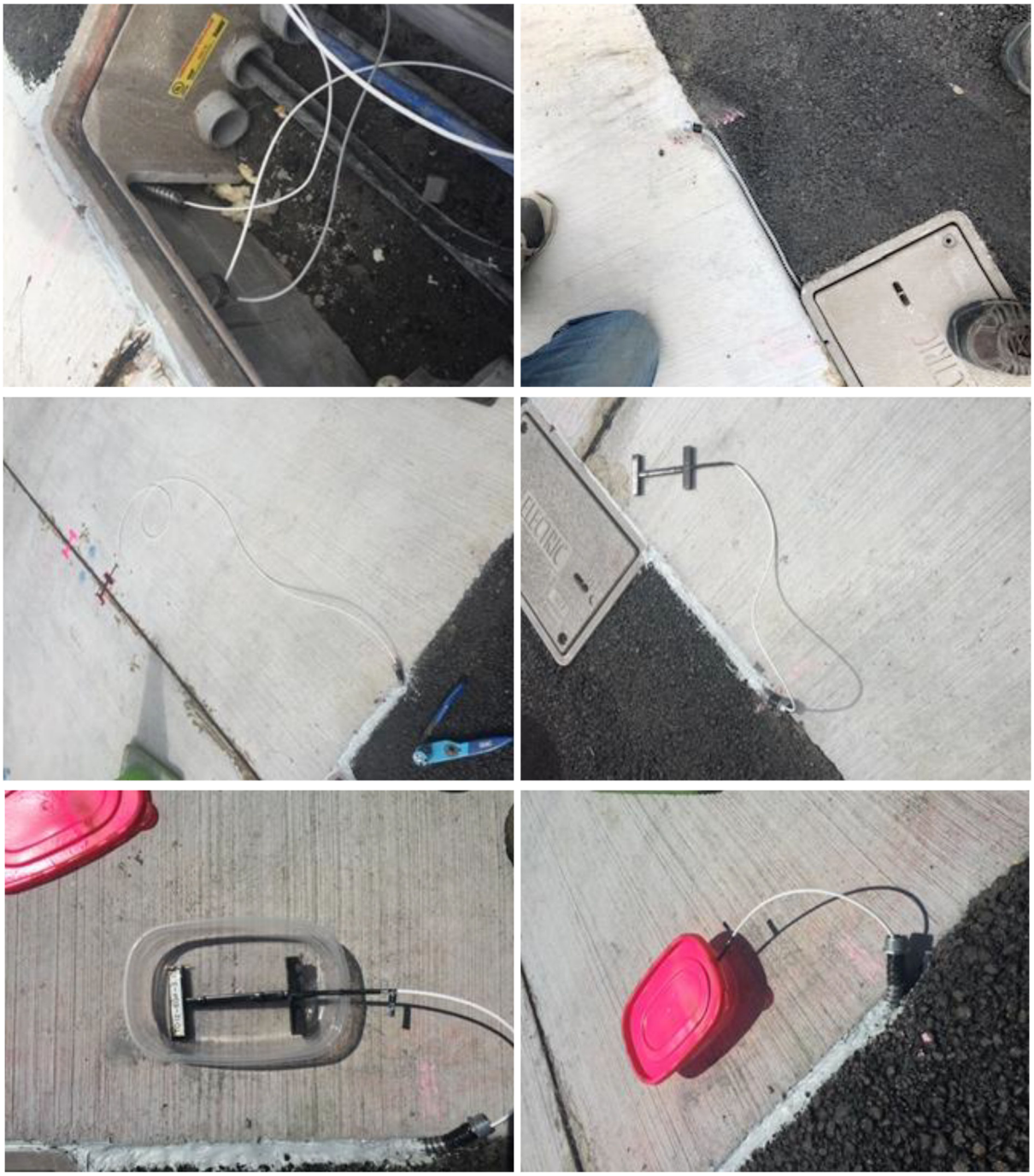

Figure 91. Installation of Embedded Sensors

Figure 92. Sealing of Joints

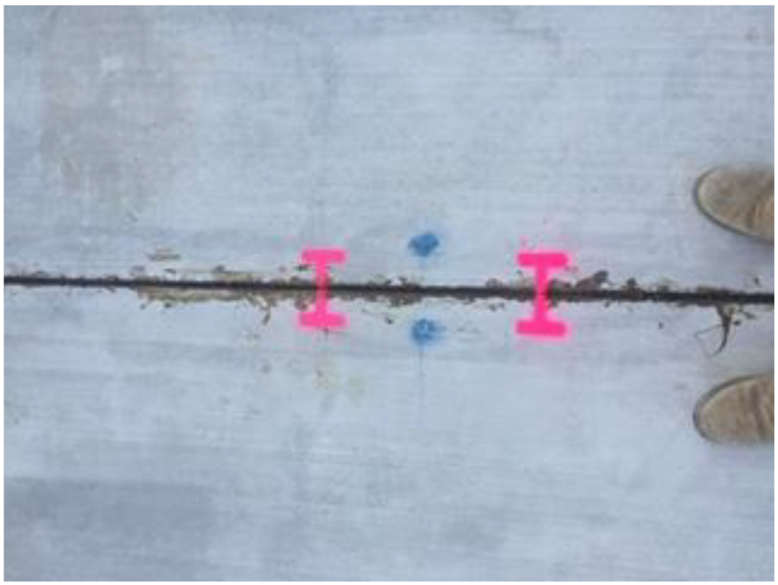

Figure 93. Marking the Location of Embedded Sensors on Top of P-501MR Layer

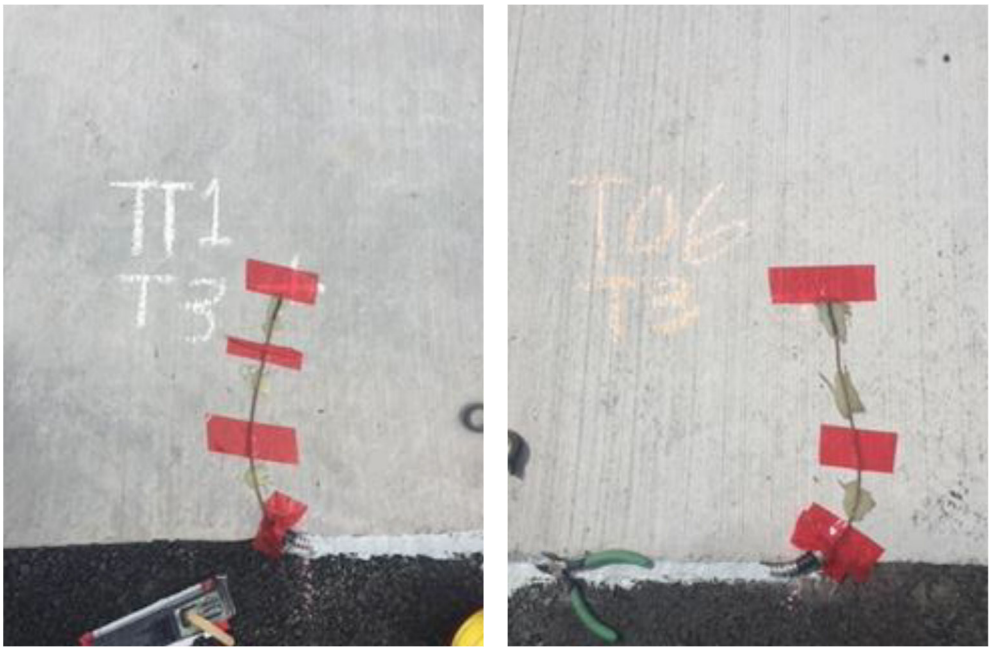

Figure 94. Installation of Thermocouples on Top of P-501MR Layer

REFERENCES

Yin, H. (2016). "Reflective Cracking Phase I Comprehensive Report," *FAA Report*.

Federal Aviation Administration. (2018). "Reflective Cracking Program," Retrieved October 8, 2018, from http://www.airporttech.tc.faa.gov/Airport-Pavement/National-Airport-Pavement-Test-Facility-NAPTF/Reflective-Cracking-Program/Introduction

Federal Aviation Administration. (2018). "Specifications for Outdoor Reflective Cracking Phase I Construction," NAPMRC, NJ.

Nunn, M. (1989). "An Investigation of Reflection Cracking in Composite Pavements in the United Kingdom," *Proceedings of 1st International RILEM Conference on Reflective Cracking in Pavements, Assessment and Control*, Liege University, Belgium.

Yin, H. (2017a). "Reflective Cracking Phase II Comprehensive Report," *FAA Report*.

Yin, H. (2017b). "Reflective Cracking Phase III Comprehensive Report," *FAA Report*.

Yin, H. (2017c). "Reflective Cracking Phase IV Comprehensive Report," *FAA Report*.

Yin, H. (2017d). "Reflective Cracking Phase V Comprehensive Report," *FAA Report*.

APPENDICES

Appendix A – Construction Plans

Appendix B – As-Built Construction Plans

Appendix C – Material Characterization Plan

Appendix D – Specifications for Outdoor Reflective Cracking Phase I Construction

Appendix E – Daily Notes

Appendix F – P-152MR (Existing Subgrade) Material Testing

Appendix G – P-154MR Material Testing

Appendix H – P-501MR Mix Design

Appendix I – P-501MR Material Testing

Appendix J – P-209MR Shoulder Testing

Appendix K – P-401MR Mix Design

Appendix L – P-401MR Material Testing

Appendix M – Cut Sheets

APPENDIX A

Construction Plans

REFLECTIVE CRACKING OUTDOOR PHASE I

100% DESIGN DRAWINGS

NATIONAL AIRPORT PAVEMENT AND MATERIALS RESEARCH CENTER (NAPMRC)
WILLIAM J. HUGHES TECHNICAL CENTER
ATLANTIC CITY AIRPORT, NEW JERSEY

04/23/2018

NEW JERSEY STATE MAP N.T.S.

VICINITY MAP N.T.S.

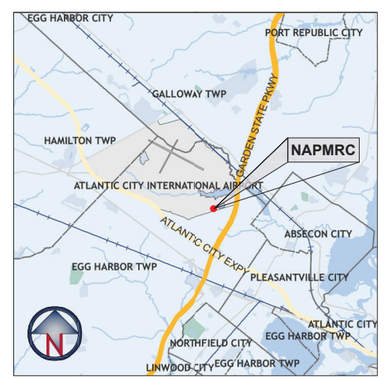

PROJECT LOCATION MAP N.T.S.

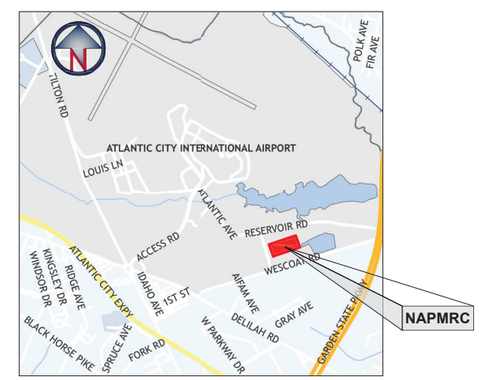

AERIAL VIEW OF THE TEST SITE N.T.S.

INDEX OF DRAWINGS

SHEET #	SHEET TITLE	LAST REVISED
1 OF 10	COVER SHEET	04/23/2018
2 OF 10	SITE ACCESS, HAULING AND STAGING AREA PLAN	04/23/2018
3 OF 10	SURVEY CONTROL PLAN	04/23/2018
4 OF 10	EXISTING CONDITIONS, DEMOLITION, EROSION AND SEDIMENT CONTROL PLAN	04/23/2018
5 OF 10	CONSTRUCTION PLAN	04/23/2018
6 OF 10	TEMPERATURE LOAD ONLY INSTRUMENTATION PLAN	04/23/2018
7 OF 10	TEMPERATURE AND TRAFFIC LOADS INSTRUMENTATION PLAN	04/23/2018
8 OF 10	INSTRUMENTATION SECTION VIEWS AND PHOTOGRAPHS	04/23/2018
9 OF 10	CONSTRUCTION DETAILS	04/23/2018
10 OF 10	DAQ DETAILS	04/23/2018

PREPARED BY:

SRA INTERNATIONAL, A CSRA COMPANY
200 DECADON DRIVE
EGG HARBOR TOWNSHIP, NJ 08234
PHONE: (609) 677-8406

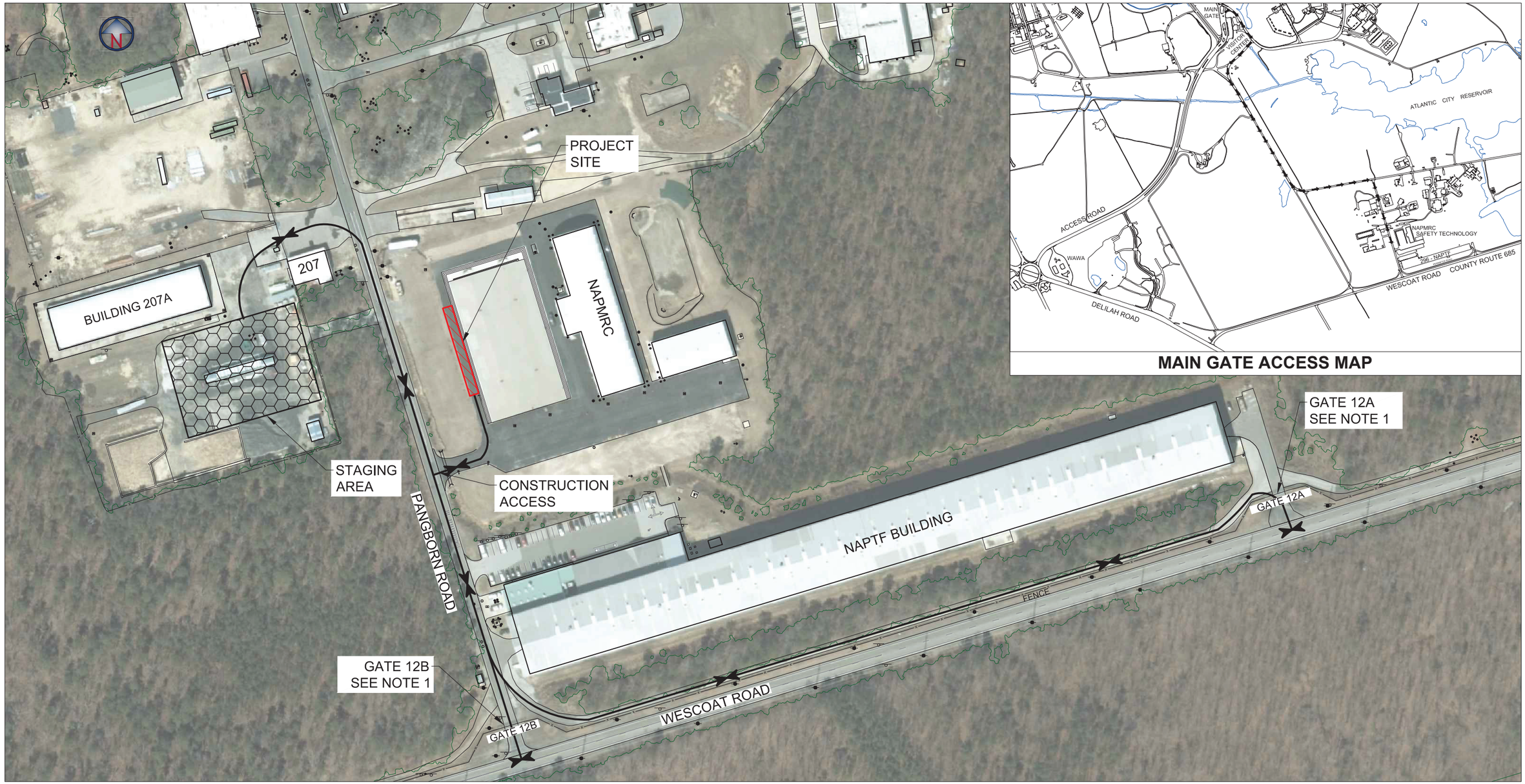

MAIN GATE ACCESS MAP

NOTES:

1. THE CONTRACTORS PRIMARY ACCESS WILL BE THROUGH THE MAIN GATE. HOWEVER. ACCESS THROUGH GATE 12A OR 12B CAN BE REQUESTED FOR PAVING AND DEMOLITION ACTIVITIES BY CONTACTING MURPHY FLYNN AT 609-485-5318 OR BEN MAHAFFAY AT 609-485-8555 AT LEAST 72 HOURS IN ADVANCE.
2. LOCATION OF THE CONTRACTORS STAGING AREA SHOWN IS APPROXIMATE. THE EXACT LOCATION WILL BE DETERMINED IN THE FIELD BY THE ENGINEER.
3. THE CONTRACTOR STAGING AREA CAN BE UTILIZED FOR THE CONTRACTORS FIELD OFFICE, PARKING OF COMPANY AND EMPLOYEE VEHICLES AND FOR STORAGE OF MATERIALS.
4. TRACKED CONSTRUCTION EQUIPMENT MAY BE PARKED OVERNIGHT IN THE CONSTRUCTION AREA. ALL OTHER PARKING AND ALL EQUIPMENT STORAGE SHALL BE IN THE STAGING AREA.
5. CONTRACTOR SHALL BE RESPONSIBLE FOR TEMPORARY DRAINAGE. GRADING, EROSION CONTROL STABILIZATION AND UTILITY CONNECTIONS IN STAGING AREAS AND SHALL RESTORE SITE TO ORIGINAL CONDITIONS UPON COMPLETION OF THE WORK.
6. ALL CONSTRUCTION AREAS SHALL BE CONSIDERED LAND DISTURBANCE AREAS.
7. OVERHEAD UTILITIES AND POLES BELONG TO FAA.
8. CONTRACTOR MUST VERIFY UTILITY CAPACITY IS ADEQUATE FOR PROJECT NEEDS. IF CAPACITY IS INSUFFICIENT. CONTRACTOR IS RESPONSIBLE FOR UPGRADES OR NEW LINES.
9. CONTRACTOR IS RESPONSIBLE FOR ALL UTILITY CONNECTIONS, CONNECTION REQUIREMENTS, AND COORDINATION WITH UTILITY OWNERS.
10. PANGBORN ROAD MUST BE KEPT CLEAN OF CONSTRUCTION DEBRIS AND AVAILABLE FOR USE BY FACILITY VEHICLES.

LEGEND:

- X — FENCE
- HAUL ROUTE
- CONSTRUCTION SITE
- STAGING AREA

80' 0 80' 160' 240'

GRAPHIC SCALE

1" = 80'

NO.	REVISIONS	DATE	BY	CHK	APR
2	REVISED PER FAA COMMENTS.	04/23/2018	M.M.		
1	REVISED PER FAA COMMENTS.	04/09/2018	M.M.		

CSRA SRA INTERNATIONAL, A CSRA COMPANY
200 DECADON DRIVE
EGG HARBOR TOWNSHIP, NJ 08234
PHONE: (609) 677-8406

FOR

NATIONAL AIRPORT PAVEMENT TEST FACILITY
ATLANTIC CITY AIRPORT, NJ

	NAME	DATE
DRAWN	M. MAZUREK	03/12/2018
CHECKED	H.Y. / J.G.	
FAA APPROVAL DATE:		
PROJECT NO:		

REFLECTIVE CRACKING OUTDOOR
PHASE I
SITE ACCESS, HAULING AND STAGING AREA PLAN

SIZE: ANSI D | SCALE: AS NOTED | SHEET 2 OF 10

CAD FILE: REFL-CRACK-OUT1-GNRL.DWG

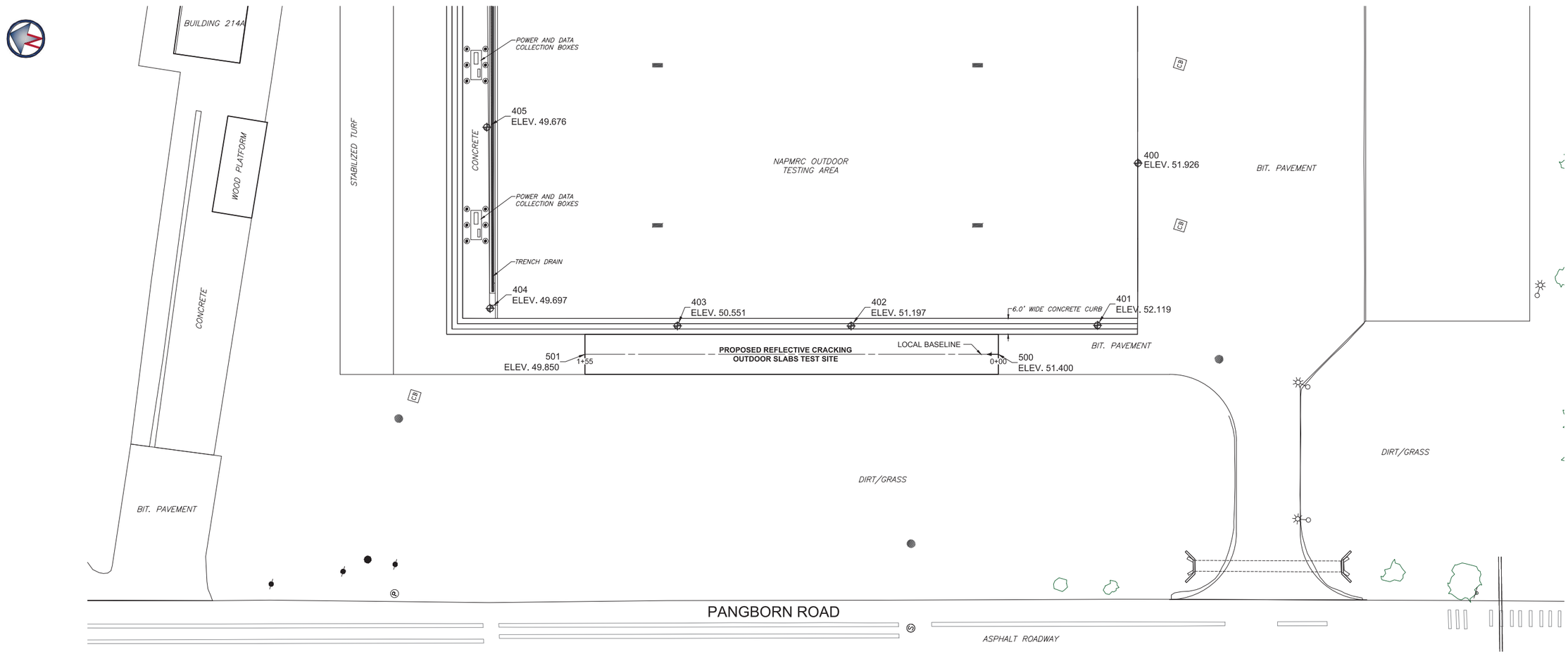

PLAN VIEW

SCALE: 1"=20'

SURVEY CONTROL POINTS

POINT #	NAD 83 NORTHING	NAD 83 EASTING	STATION	OFFSET	ELEVATION
400	218445.04	476148.66	-52.35	71.67	51.926
401	218441.61	476086.08	-37.16	10.87	52.119
402	218529.81	476058.61	55.21	10.62	51.197
403	218592.05	476039.42	120.34	10.65	50.551
404	218661.06	476024.95	190.55	17.18	49.697
405	218682.30	476089.50	191.81	85.12	49.676
500	218473.92	476064.74	0.00	0.00	51.400
501	218622.02	476019.03	155.00	0.00	49.850

NOTES:

1. THE PROJECT AREA IS LOCATED NEAR THE NATIONAL AIRPORT PAVEMENT AND MATERIALS RESEARCH CENTER (NAPMRC) WITHIN THE WILLIAM J. HUGHES TECHNICAL CENTER, LOCATED AT THE ATLANTIC CITY INTERNATIONAL AIRPORT, EGG HARBOR TOWNSHIP, NEW JERSEY 08405.

2. THE HORIZONTAL CONTROL NETWORK IS REFERENCED TO THE NEW JERSEY STATE PLANE COORDINATE SYSTEM, NORTH AMERICAN DATUM OF 1983 (NAD83).

STATION AND OFFSET COORDINATES ARE REFERENCED TO A LOCAL BASE LINE ALIGNED WITH THE TESTING AREA CENTER LINE.

3. THE VERTICAL CONTROL NETWORK IS REFERENCED TO THE NORTH AMERICAN VERTICAL DATUM OF 1988 (NAVD88).

4. BASE INFORMATION TAKEN FROM PLANS BY OTHERS:

- HIGH TEMPERATURE PAVEMENT TEST FACILITY, EXISTING CONDITIONS & DEMOLITION PLAN, DRAWING NUMBER 2275550-C100.
- HIGH TEMPERATURE PAVEMENT TEST FACILITY, SITE LAYOUT PLAN, DRAWING NUMBER 2275550-C110, DATED 12/21/12, LAST REVISED 10/26/15.
- HIGH TEMPERATURE PAVEMENT TEST FACILITY, SITE UTILITY PLAN, DRAWING NUMBER 2275550-C130, DATED 12/21/12, LAST REVISED 10/26/15.
- CAD FILE WITH ACY BASE PLAN CAPTURED DURING 2015 BASEMAP PROJECT.

4. ALL DIMENSIONS ARE SHOWN IN UNITED STATES SURVEY FEET UNITS.

LEGEND:

- CONTROL POINT
- UTILITY POLE
- BOLLARD
- CATCH BASIN
- SEWER MANHOLE
- ELECTRICAL MANHOLE
- LIGHT POLE
- SIGN

CONTROL POINT MARKER DETAIL

EACH CONTROL POINT LOCATION IS MARKED WITH A MAGNETIC NAIL WITH WASHER. THE CONTROL POINT NUMBER IS ENGRAVED ON EACH WASHER.

20' 0 20' 40' 60'

GRAPHIC SCALE

1" = 20'

NO.	REVISIONS	DATE	BY	CHK	APR
2	REVISED PER FAA COMMENTS.	04/23/2018	M.M.		
1	REVISED PER FAA COMMENTS.	04/09/2018	M.M.		

CSRA

SRA INTERNATIONAL, A CSRA COMPANY
200 DECADON DRIVE
EGG HARBOR TOWNSHIP, NJ 08234
PHONE: (609) 677-8406

FOR

NATIONAL AIRPORT PAVEMENT TEST FACILITY
ATLANTIC CITY AIRPORT, NJ

	NAME	DATE
DRAWN	M. MAZUREK	03/12/2018
CHECKED	H.Y. / J.G.	
FAA APPROVAL DATE:		

REFLECTIVE CRACKING OUTDOOR

PHASE I

SURVEY CONTROL PLAN

PROJECT NO: | SIZE: ANSI D | SCALE: AS NOTED | SHEET 3 OF 10

CAD FILE: REFL-CRACK-OUT1-GNRL.DWG

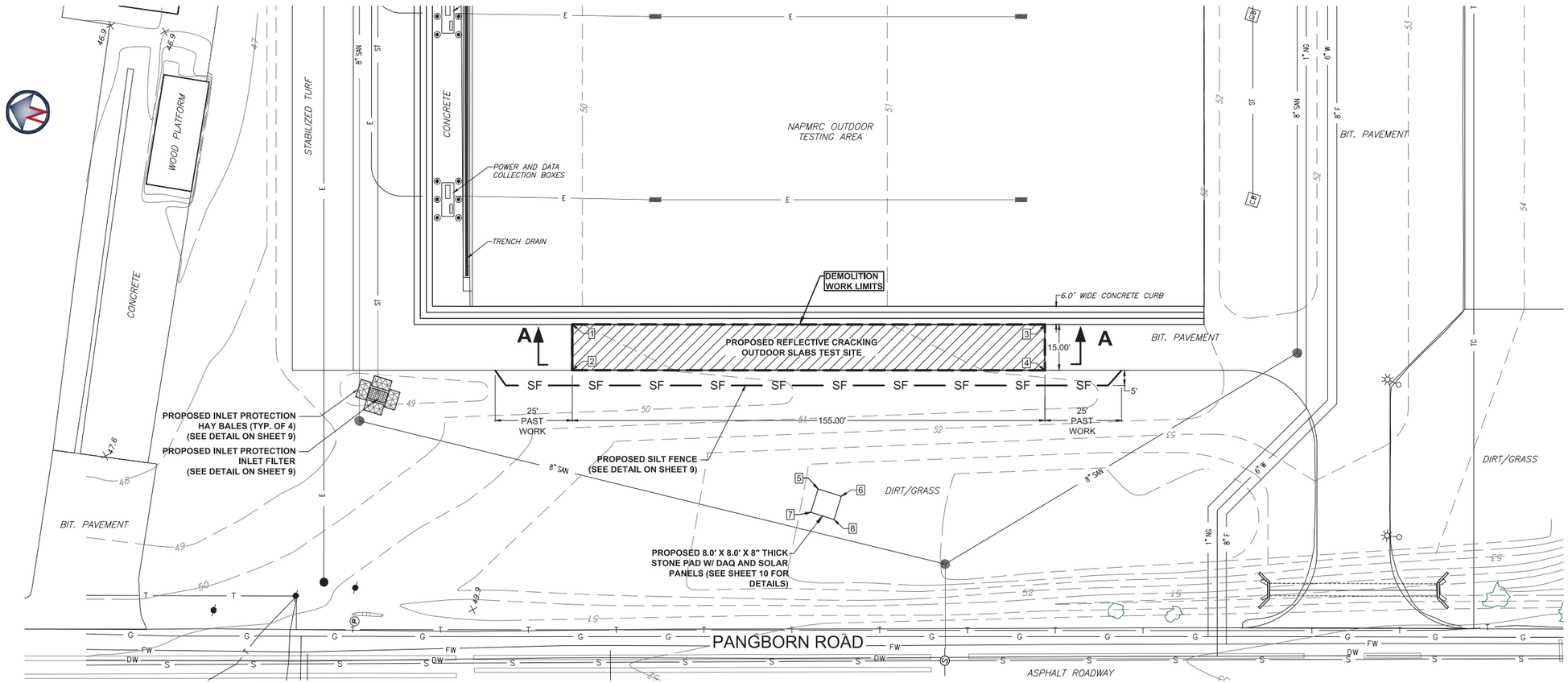

GRAPHIC SCALE
1" = 20'

PLAN VIEW

SCALE: 1"=20'

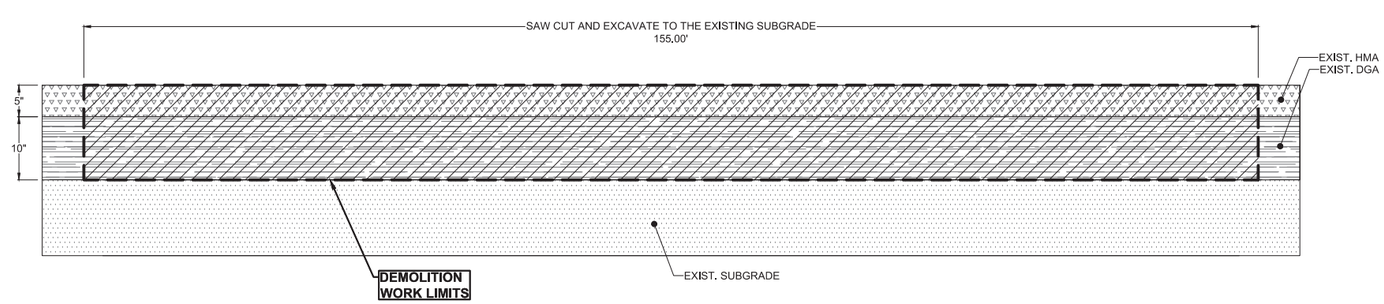

SECTION VIEW A-A

HORIZONTAL SCALE: 1"=10'
VERTICAL SCALE: 1"=1'

LEGEND - EXISTING:

- UTILITY POLE
- BOLLARD
- CATCH BASIN
- SEWER MANHOLE
- ELECTRICAL MANHOLE
- LIGHT POLE
- SIGN
- 52 — ELEVATION CONTOUR LINE
- E — ELECTRIC LINE
- T — TELECOMMUNICATION LINE
- G — GAS LINE
- DW — DOMESTIC WATER LINE
- FW — FIRE SYSTEM WATER LINE
- S — SEWER LINE
- ST — STORM LINE
- EXISTING SUBGRADE COURSE
- EXISTING AGGREGATE BASE (DGA)
- EXISTING HOT MIX ASPHALT (HMA)

LEGEND - PROPOSED:

- INLET FILTER
- HAY BALE
- SF — SILT FENCE
- DEMOLITION LIMITS

NOTES:

1. BASE INFORMATION TAKEN FROM PLANS BY OTHERS:
   - HIGH TEMPERATURE PAVEMENT TEST FACILITY, EXISTING CONDITIONS & DEMOLITION PLAN, DRAWING NUMBER 2275550-C100.
   - HIGH TEMPERATURE PAVEMENT TEST FACILITY, SITE LAYOUT PLAN, DRAWING NUMBER 2275550-C110, DATED 12/21/12, LAST REVISED 10/26/15.
   - HIGH TEMPERATURE PAVEMENT TEST FACILITY, SITE UTILITY PLAN, DRAWING NUMBER 2275550-C130, DATED 12/21/12, LAST REVISED 10/26/15.
   - CAD FILE WITH ACY BASE PLAN CAPTURED DURING 2015 BASEMAP PROJECT.
2. ALL DIMENSIONS ARE SHOWN IN UNITED STATES SURVEY FEET UNITS.
3. THE LOCATION OF THE EXISTING UNDERGROUND UTILITIES SHOWN ON THIS PLAN HAVE BEEN TAKEN FROM THE ABOVE REFERENCED PLANS. COMPLETENESS OF LOCATION OF UNDERGROUND UTILITIES AND STRUCTURES IS NOT GUARANTEED. ADDITIONAL UNDERGROUND UTILITIES MAY BE PRESENT AND NOT SHOWN ON THIS PLAN. USERS OF THIS PLAN MUST TAKE THE NECESSARY PRECAUTIONS TO ENSURE THE SAFETY OF PERSONNEL AND AVOID THE INTERRUPTION OF UTILITY SERVICES TO THE FACILITY.
4. EXISTING DGA MAY BE REUSED IN LIEU OF P-154 IF SAMPLES OBTAINED DURING EXCAVATION MEET THE GRADATIONS OF THE SPECIFICATION.

DEMOLITION LIMITS POINT TABLE

POINT #	NAD 83 NORTHING	NAD 83 EASTING	STATION	OFFSET
1	218624.24	476026.20	155.00	7.50
2	218619.81	476011.86	155.00	-7.50
3	218476.13	476071.91	0.00	7.50
4	218471.71	476057.58	0.00	-7.50

PAD CORNER POINTS TABLE

POINT #	NAD 83 NORTHING	NAD 83 EASTING	STATION	OFFSET
5	218531.32	475998.45	74.40	-46.42
6	218523.32	475998.45	66.76	-48.78
7	218531.32	475990.45	76.76	-54.06
8	218523.32	475990.45	69.12	-56.42

NO.	REVISIONS	DATE	BY	CHK	APR
2	REVISED PER FAA COMMENTS.	04/23/2018	M.M.		
1	REVISED PER FAA COMMENTS.	04/09/2018	M.M.		

CSRA
SRA INTERNATIONAL, A CSRA COMPANY
200 DECADON DRIVE
EGG HARBOR TOWNSHIP, NJ 08234
PHONE: (609) 677-8406

FOR

NATIONAL AIRPORT PAVEMENT TEST FACILITY
ATLANTIC CITY AIRPORT, NJ

	NAME	DATE
DRAWN	M. MAZUREK	03/12/2018
CHECKED	H.Y. / J.G.	
FAA APPROVAL DATE:		

REFLECTIVE CRACKING OUTDOOR

PHASE I EXISTING CONDITIONS, DEMOLITION, EROSION AND SEDIMENT CONTROL PLAN

PROJECT NO: | SIZE: ANSI D | SCALE: AS NOTED | SHEET 4 OF 10

CAD FILE: REFL-CRACK-OUT1-GNRL.DWG

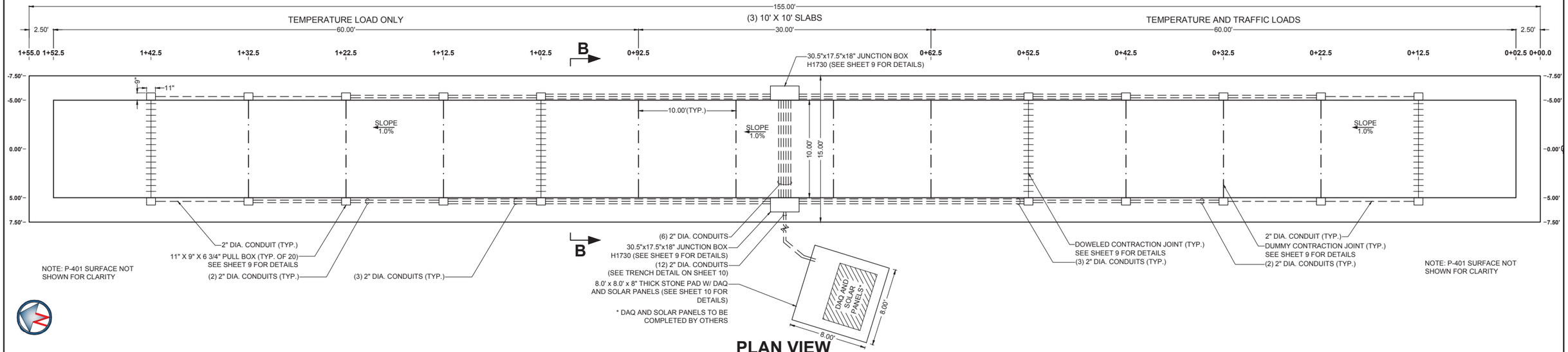

PLAN VIEW

SCALE: 1"=5'

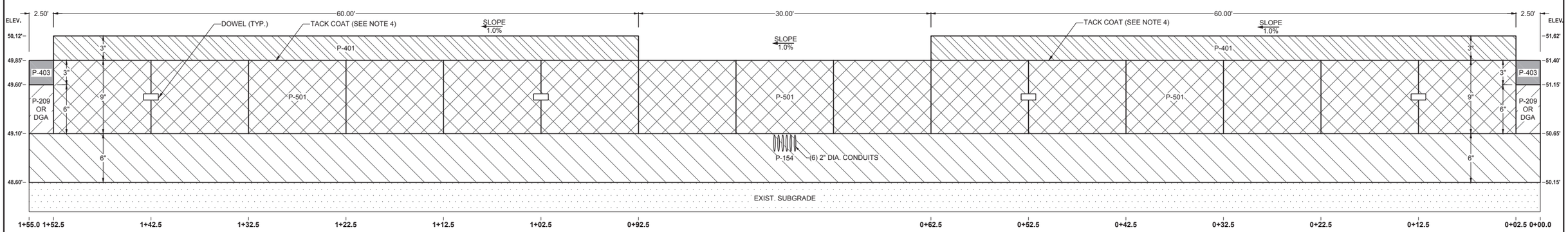

PROFILE VIEW

HORIZONTAL SCALE: 1"=5'

VERTICAL SCALE: 1"=0.5'

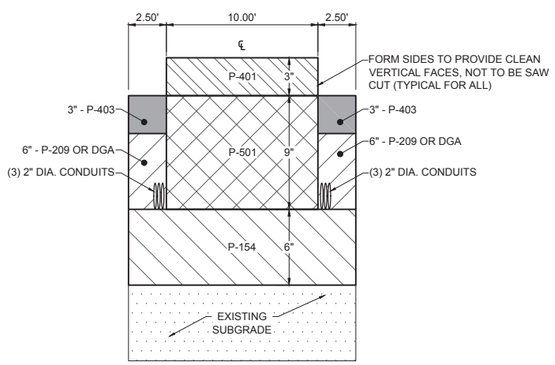

TYPICAL SECTION VIEW B-B

HORIZONTAL SCALE: 1"=5'

VERTICAL SCALE: 1"=0.5'

NOTES:

1. PLACE P-501 IN ONE (1) LIFT.
2. PLACE P-401 IN ONE (1) COMPACTED LIFT.
3. PLACE P-154 IN ONE (1) COMPACTED LIFT.
4. STRAIGHT ASPHALT BINDER (I.E., PG 64-22) SHALL BE APPLIED BETWEEN LIFTS AND ON TOP OF THE CONCRETE AS A TACK COAT, AT AN APPLICATION RATE OF 0.04 – 0.06 GAL/YD2.
5. EXISTING DGA MAY BE REUSED IN LIEU OF P-154 IF SAMPLES OBTAINED DURING EXCAVATION MEET THE GRADATIONS OF THE SPECIFICATION.
6. P-501 CONCRETE TO HAVE BURLAP DRAG FINISH.

5' 0 5' 10' 15'

GRAPHIC SCALE

1" = 5'

LEGEND:

- TYPE C DOWELED CONTRACTION JOINT
- DUMMY CONTRACTION JOINT
- CONDUIT
- JUNCTION BOX
- PULL BOX
- P-401 PLANT MIX BITUMINOUS PAVEMENT
- P-501 - CONCRETE PAVEMENT (PORTLAND CEMENT CONCRETE)
- P-154 - SUBBASE
- P-209 OR DGA
- P-403 SURFACE COURSE

NO.	REVISIONS	DATE	BY	CHK	APR
2	REVISED PER FAA COMMENTS.	04/23/2018	M.M.		
1	REVISED PER FAA COMMENTS.	04/09/2018	M.M.		

CSRA
SRA INTERNATIONAL, A CSRA COMPANY.
200 DECADON DRIVE
EGG HARBOR TOWNSHIP, NJ 08234 FOR
PHONE: (609) 677-8406

NATIONAL AIRPORT PAVEMENT TEST FACILITY
ATLANTIC CITY AIRPORT, NJ

	NAME	DATE
DRAWN	M. MAZUREK	03/12/2018
CHECKED	H.Y. / J.G.	
FAA APPROVAL DATE:		

REFLECTIVE CRACKING OUTDOOR

PHASE I

CONSTRUCTION PLAN

PROJECT NO: | SIZE: ANSI D | SCALE: AS NOTED | SHEET 5 OF 10

CAD FILE: REFL-CRACK-OUT1-CONS.DWG

TEMPERATURE LOAD ONLY PLAN VIEW

SCALE: 1"=3'

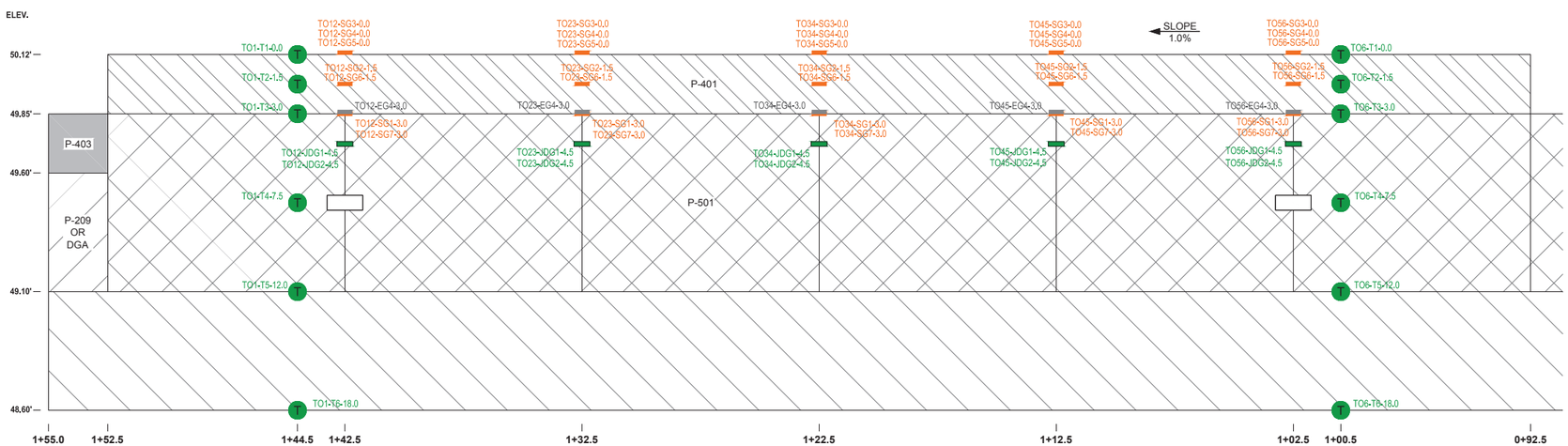

TEMPERATURE LOAD ONLY PROFILE VIEW

HORIZONTAL SCALE: 1"=3'

VERTICAL SCALE: 1"=0.3'

PROPOSED INSTRUMENTATION

ID	SENSOR	X STA. (FEET)	Y OFFSET (FEET)	DEPTH FROM TOP LAYER SURFACE (IN)
1	TO1-T1-0.0	144.50	-4.00	0.0
2	TO1-T2-1.5	144.50	-4.00	1.5
3	TO1-T3-3.0	144.50	-4.00	3.0
4	TO1-T4-7.5	144.50	-4.00	7.5
5	TO1-T5-12.0	144.50	-4.00	12.0
6	TO1-T6-18.0	144.50	-4.00	18.0
7	TO6-T1-0.0	100.50	4.00	0.0
8	TO6-T2-1.5	100.50	4.00	1.5
9	TO6-T3-3.0	100.50	4.00	3.0
10	TO6-T4-7.5	100.50	4.00	7.5
11	TO6-T5-12.0	100.50	4.00	12.0
12	TO6-T6-18.0	100.50	4.00	18.0
22	TO12-EG4-3.0	142.50	0.00	3.0
20	TO12-JDG1-4.5	142.50	5.00	4.5
21	TO12-JDG2-4.5	142.50	-5.00	4.5
13	TO12-SG1-3.0	142.50	5.00	3.0
14	TO12-SG2-1.5	142.50	5.00	1.5
15	TO12-SG3-0.0	142.50	5.00	0.0
16	TO12-SG4-0.0	142.50	0.00	0.0
17	TO12-SG5-0.0	142.50	-5.00	0.0
18	TO12-SG6-1.5	142.50	-5.00	1.5
19	TO12-SG7-3.0	142.50	-5.00	3.0
33	TO23-EG4-3.0	132.50	0.00	3.0
31	TO23-JDG1-4.5	132.50	5.00	4.5
32	TO23-JDG2-4.5	132.50	-5.00	4.5
24	TO23-SG1-3.0	132.50	5.00	3.0
25	TO23-SG2-1.5	132.50	5.00	1.5
26	TO23-SG3-0.0	132.50	5.00	0.0
27	TO23-SG4-0.0	132.50	0.00	0.0
28	TO23-SG5-0.0	132.50	-5.00	0.0
29	TO23-SG6-1.5	132.50	-5.00	1.5
30	TO23-SG7-3.0	132.50	-5.00	3.0
44	TO34-EG4-3.0	122.50	0.00	3.0
42	TO34-JDG1-4.5	122.50	5.00	4.5
43	TO34-JDG2-4.5	122.50	-5.00	4.5
35	TO34-SG1-3.0	122.50	5.00	3.0
36	TO34-SG2-1.5	122.50	5.00	1.5
37	TO34-SG3-0.0	122.50	5.00	0.0
38	TO34-SG4-0.0	122.50	0.00	0.0
39	TO34-SG5-0.0	122.50	-5.00	0.0
40	TO34-SG6-1.5	122.50	-5.00	1.5
41	TO34-SG7-3.0	122.50	-5.00	3.0
55	TO45-EG4-3.0	112.50	0.00	3.0
53	TO45-JDG1-4.5	112.50	5.00	4.5
54	TO45-JDG2-4.5	112.50	-5.00	4.5
46	TO45-SG1-3.0	112.50	5.00	3.0
47	TO45-SG2-1.5	112.50	5.00	1.5
48	TO45-SG3-0.0	112.50	5.00	0.0
49	TO45-SG4-0.0	112.50	0.00	0.0
50	TO45-SG5-0.0	112.50	-5.00	0.0
51	TO45-SG6-1.5	112.50	-5.00	1.5
52	TO45-SG7-3.0	112.50	-5.00	3.0
66	TO56-EG4-3.0	102.50	0.00	3.0
64	TO56-JDG1-4.5	102.50	5.00	4.5
65	TO56-JDG2-4.5	102.50	-5.00	4.5
57	TO56-SG1-3.0	102.50	5.00	3.0
58	TO56-SG2-1.5	102.50	5.00	1.5
59	TO56-SG3-0.0	102.50	5.00	0.0
60	TO56-SG4-0.0	102.50	0.00	0.0
61	TO56-SG5-0.0	102.50	-5.00	0.0
62	TO56-SG6-1.5	102.50	-5.00	1.5
63	TO56-SG7-3.0	102.50	-5.00	3.0

LEGEND:

- P-401 PLANT MIX BITUMINOUS PAVEMENT
- P-501 - CONCRETE PAVEMENT (PORTLAND CEMENT CONCRETE)
- P-154 - SUBBASE
- P-403 SURFACE COURSE

3' 0 3' 6' 9'

GRAPHIC SCALE

1" = 3'

INSTRUMENT KEY AND QUANTITY			
	EG	EMBEDDED DYNATEST STRAIN GAGE	5
	SG	SURFACE STRAIN GAGE	35
	JDG	JOINT DISPLACEMENT GAGE	10
T	T	THERMOCOUPLE	12

NO.	REVISIONS	DATE	BY	CHK	APR
2	REVISED PER FAA COMMENTS.	04/23/2018	M.M.		
1	REVISED PER FAA COMMENTS.	04/09/2018	M.M.		

CSRA
SRA INTERNATIONAL, A CSRA COMPANY
200 DECADON DRIVE
EGG HARBOR TOWNSHIP, NJ 08234
PHONE: (609) 677-8406

FOR

NATIONAL AIRPORT PAVEMENT TEST FACILITY
ATLANTIC CITY AIRPORT, NJ

	NAME	DATE
DRAWN	M. MAZUREK	03/12/2018
CHECKED	H.Y. / J.G.	
FAA APPROVAL DATE:		

REFLECTIVE CRACKING OUTDOOR

PHASE I

TEMPERATURE LOAD ONLY INSTRUMENTATION PLAN

PROJECT NO: | SIZE: ANSI D | SCALE: AS NOTED | SHEET 6 OF 10

CAD FILE: REFL-CRACK-OUT1-INST.DWG

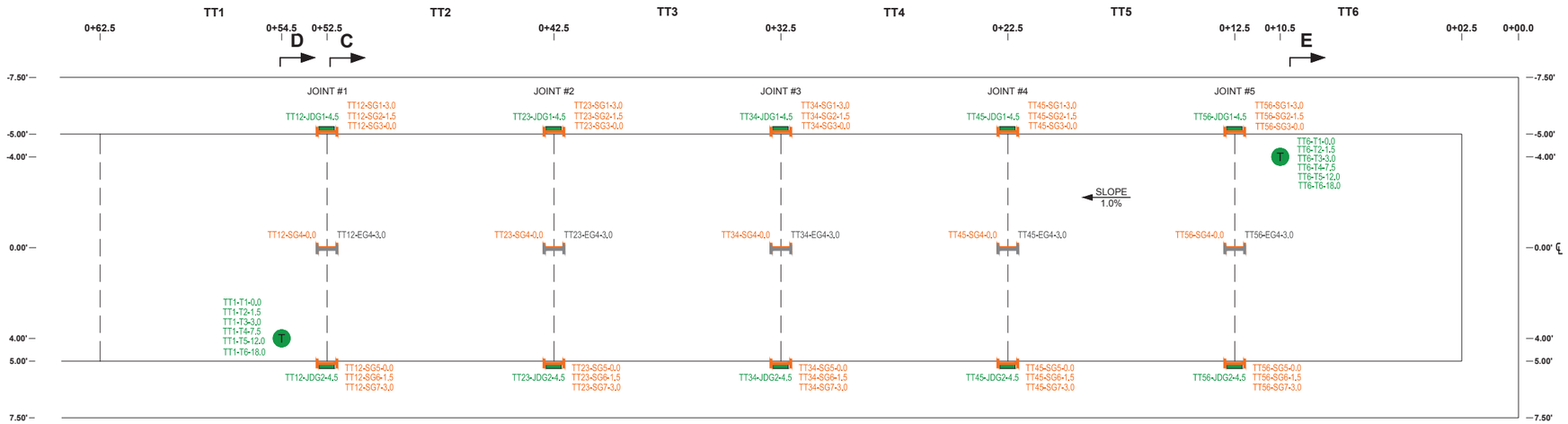

TEMPERATURE AND TRAFFIC LOADS PLAN VIEW

SCALE: 1"=3'

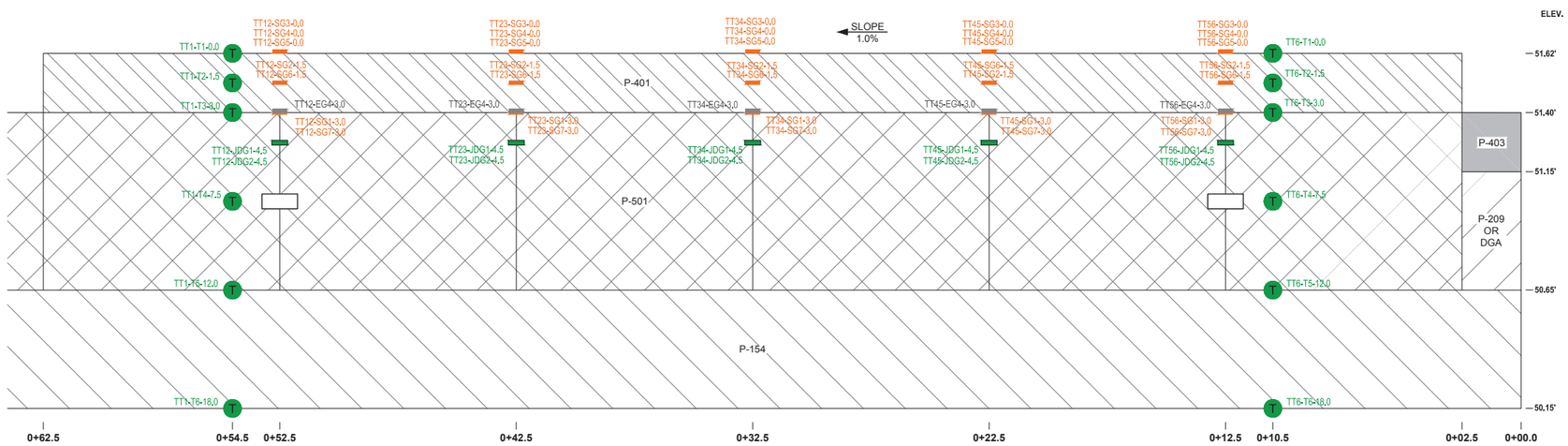

TEMPERATURE AND TRAFFIC LOADS PROFILE VIEW

HORIZONTAL SCALE: 1"=3'
VERTICAL SCALE: 1"=0.3'

PROPOSED INSTRUMENTATION

ID	SENSOR	X STA. (FEET)	Y OFFSET (FEET)	DEPTH FROM TOP LAYER SURFACE (IN)
133	TT1-T1-0.0	54.50	-4.00	0.0
134	TT1-T2-1.5	54.50	-4.00	1.5
69	TT1-T3-3.0	54.50	-4.00	3.0
71	TT1-T4-7.5	54.50	-4.00	7.5
68	TT1-T5-12.0	54.50	-4.00	12.0
70	TT1-T6-18.0	54.50	-4.00	18.0
75	TT6-T1-0.0	10.50	4.00	0.0
76	TT6-T2-1.5	10.50	4.00	1.5
77	TT6-T3-3.0	10.50	4.00	3.0
72	TT6-T4-7.5	10.50	4.00	7.5
73	TT6-T5-12.0	10.50	4.00	12.0
74	TT6-T6-18.0	10.50	4.00	18.0
129	TT12-EG4-3.0	52.50	0.00	3.0
127	TT12-JDG1-4.5	52.50	5.00	4.5
128	TT12-JDG2-4.5	52.50	-5.00	4.5
78	TT12-SG1-3.0	52.50	5.00	3.0
79	TT12-SG2-1.5	52.50	5.00	1.5
80	TT12-SG3-0.0	52.50	5.00	0.0
81	TT12-SG4-0.0	52.50	0.00	0.0
82	TT12-SG5-0.0	52.50	-5.00	0.0
83	TT12-SG6-1.5	52.50	-5.00	1.5
84	TT12-SG7-3.0	52.50	-5.00	3.0
92	TT23-EG4-3.0	42.50	0.00	3.0
90	TT23-JDG1-4.5	42.50	5.00	4.5
91	TT23-JDG2-4.5	42.50	-5.00	4.5
131	TT23-SG1-3.0	42.50	5.00	3.0
132	TT23-SG2-1.5	42.50	5.00	1.5
85	TT23-SG3-0.0	42.50	5.00	0.0
86	TT23-SG4-0.0	42.50	0.00	0.0
87	TT23-SG5-0.0	42.50	-5.00	0.0
88	TT23-SG6-1.5	42.50	-5.00	1.5
89	TT23-SG7-3.0	42.50	-5.00	3.0
103	TT34-EG4-3.0	32.50	0.00	3.0
101	TT34-JDG1-4.5	32.50	5.00	4.5
102	TT34-JDG2-4.5	32.50	-5.00	4.5
94	TT34-SG1-3.0	32.50	5.00	3.0
95	TT34-SG2-1.5	32.50	5.00	1.5
96	TT34-SG3-0.0	32.50	5.00	0.0
97	TT34-SG4-0.0	32.50	0.00	0.0
98	TT34-SG5-0.0	32.50	-5.00	0.0
99	TT34-SG6-1.5	32.50	-5.00	1.5
100	TT34-SG7-3.0	32.50	-5.00	3.0
114	TT45-EG4-3.0	22.50	0.00	3.0
112	TT45-JDG1-4.5	22.50	5.00	4.5
113	TT45-JDG2-4.5	22.50	-5.00	4.5
105	TT45-SG1-3.0	22.50	5.00	3.0
106	TT45-SG2-1.5	22.50	5.00	1.5
107	TT45-SG3-0.0	22.50	5.00	0.0
108	TT45-SG4-0.0	22.50	0.00	0.0
109	TT45-SG5-0.0	22.50	-5.00	0.0
110	TT45-SG6-1.5	22.50	-5.00	1.5
111	TT45-SG7-3.0	22.50	-5.00	3.0
125	TT56-EG4-3.0	12.50	0.00	3.0
123	TT56-JDG1-4.5	12.50	5.00	4.5
124	TT56-JDG2-4.5	12.50	-5.00	4.5
116	TT56-SG1-3.0	12.50	5.00	3.0
117	TT56-SG2-1.5	12.50	5.00	1.5
118	TT56-SG3-0.0	12.50	5.00	0.0
119	TT56-SG4-0.0	12.50	0.00	0.0
120	TT56-SG5-0.0	12.50	-5.00	0.0
121	TT56-SG6-1.5	12.50	-5.00	1.5
122	TT56-SG7-3.0	12.50	-5.00	3.0

LEGEND:

- P-401 PLANT MIX BITUMINOUS PAVEMENT
- P-501 - CONCRETE PAVEMENT (PORTLAND CEMENT CONCRETE)
- P-154 - SUBBASE
- P-403 SURFACE COURSE

GRAPHIC SCALE
3' 0 3' 6' 9'
1" = 3'

INSTRUMENT KEY AND QUANTITY			
	EG	EMBEDDED DYNATEST STRAIN GAGE	5
	SG	SURFACE STRAIN GAGE	35
	JDG	JOINT DISPLACEMENT GAGE	10
	T	THERMOCOUPLE	12

NO.	REVISIONS	DATE	BY	CHK	APR
2	REVISED PER FAA COMMENTS.	04/23/2018	M.M.		
1	REVISED PER FAA COMMENTS.	04/09/2018	M.M.		

CSRA
SRA INTERNATIONAL, A CSRA COMPANY
200 DECADON DRIVE
EGG HARBOR TOWNSHIP, NJ 08234
PHONE: (609) 677-8406

FOR

NATIONAL AIRPORT PAVEMENT TEST FACILITY
ATLANTIC CITY AIRPORT, NJ

	NAME	DATE
DRAWN	M. MAZUREK	03/12/2018
CHECKED	H.Y. / J.G.	
FAA APPROVAL DATE:		

REFLECTIVE CRACKING OUTDOOR

PHASE I TEMPERATURE AND TRAFFIC LOADS INSTRUMENTATION PLAN

PROJECT NO: | SIZE: ANSI D | SCALE: AS NOTED | SHEET 7 OF 10

CAD FILE: REFL-CRACK-OUT1-INST.DWG

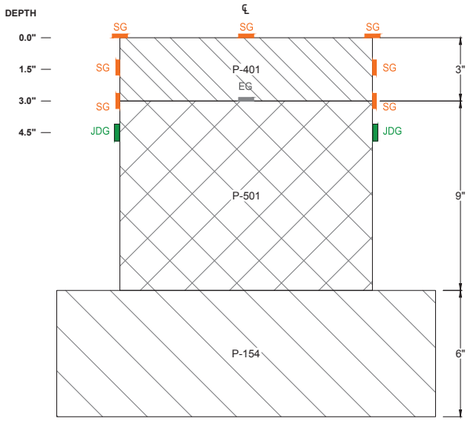

TYPICAL INSTRUMENTATION SECTION VIEW C-C

HORIZONTAL SCALE: 1"=3'
VERTICAL SCALE: 1"=0.3'

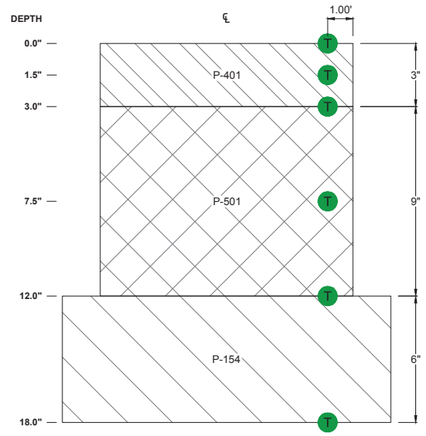

THERMOCOUPLE PLACEMENT SECTION VIEW D-D

HORIZONTAL SCALE: 1"=3'
VERTICAL SCALE: 1"=0.3'

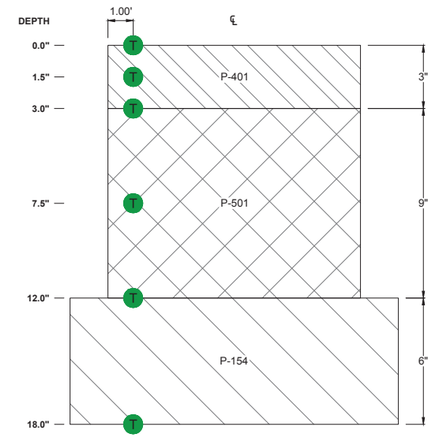

THERMOCOUPLE PLACEMENT SECTION VIEW E-E

HORIZONTAL SCALE: 1"=3'
VERTICAL SCALE: 1"=0.3'

INSTRUMENT KEY AND QUANTITY			
	EG	EMBEDDED DYNATEST STRAIN GAGE	10
	SG	SURFACE STRAIN GAGE	70
	JDG	JOINT DISPLACEMENT GAGE	20
T	T	THERMOCOUPLE	24

LEGEND:

- P-401 PLANT MIX BITUMINOUS PAVEMENT
- P-501 - CONCRETE PAVEMENT (PORTLAND CEMENT CONCRETE)
- P-154 - SUBBASE

THERMOCOUPLE

N.T.S.

SURFACE STRAIN GAGE

N.T.S.

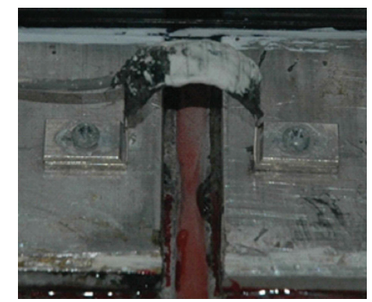

JOINT DISPLACEMENT GAGE

N.T.S.

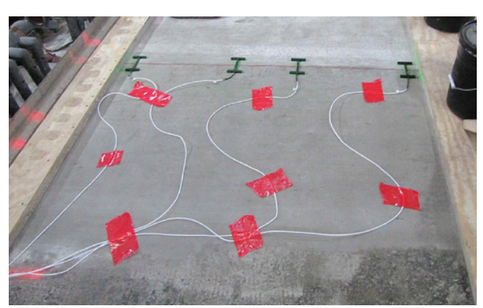

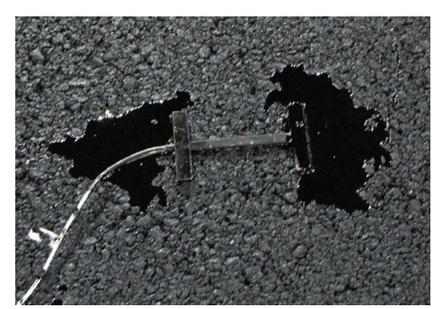

EMBEDDED H-BAR STRAIN GAGES

N.T.S.

NO.	REVISIONS	DATE	BY	CHK	APR
2	REVISED PER FAA COMMENTS.	04/23/2018	M.M.		
1	REVISED PER FAA COMMENTS.	04/09/2018	M.M.		

CSRA
SRA INTERNATIONAL, A CSRA COMPANY
200 DECADON DRIVE
EGG HARBOR TOWNSHIP, NJ 08234 FOR
PHONE: (609) 677-8406

NATIONAL AIRPORT PAVEMENT TEST FACILITY
ATLANTIC CITY AIRPORT, NJ

	NAME	DATE
DRAWN	M. MAZUREK	03/12/2018
CHECKED	H.Y. / J.G.	
FAA APPROVAL DATE:		
PROJECT NO:		

REFLECTIVE CRACKING OUTDOOR
PHASE I INSTRUMENTATION SECTION VIEWS AND PHOTOGRAPHS

SIZE: ANSI D | SCALE: AS NOTED | SHEET 8 OF 10

CAD FILE: REFL-CRACK-OUT1-INST.DWG

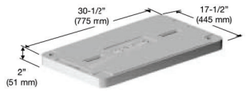

Cover[1]
Material: Polymer Concrete
Weight: 75.0 lbs. (34 kgs)
Model: H1730-P1
Skid Resistant Surface[2]
(Material and cover dimensions compliant with WUC, Guide 3.6[3])

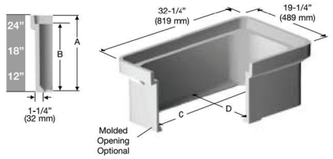

Bodies (12", 18", 24")
Material: Polymer Concrete

Model: H1730-12 (65 lbs./29.4 kgs)
A 12" (305 mm) B 10" (254 mm)
C 28 5/16" (720 mm) D 15 5/16" (390 mm)

Model: H1730-18 (92 lbs./41.7 kgs)
A 18" (457 mm) B 16" (406 mm)
C 28 3/16" (716 mm) D 15 3/16" (386 mm)

Model: H1730-24 (117 lbs./53.0 kgs)
A 24" (610 mm) B 22" (559 mm)
C 28 1/16" (712 mm) D 15 1/16" (382 mm)

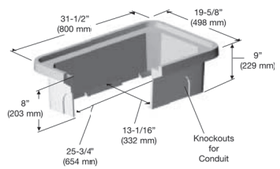

Bottom Extension
Material: Polymer Concrete
Model: H1730-9X (45 lbs./20 kgs)

Tolerances
Cover ±1/8" (3 mm); Body ±1/8" (3 mm)
Foot ±1/16" (2 mm); Height ±1/4" (6 mm)

Fasteners: 2 each (optional 4 ea) 3/8-16 UNC, Stainless Steel, Hex Head with Washer; Options: Captive bolt and floating nut, size, quantity, type head are available.
Cover Identification is blank unless specified.
Pull Slot 1/2" x 4" (13 mm x 102 mm)
Steel Covers Optional

Boxes are stackable. 24" deep shall be used as the lower box only. Vertical load ratings are statec for single boxes.
For units with MOLDED OPENINGS, subtract 2 lbs from Unit Weight.
Weights may vary slightly. Dimensions in inches with metric equivalents.

Revision Date 4/2003

Vertical and Lateral Load Rating

Heavy Duty Covers

- Compliant with AASHTO, Design Load of H-10; ASTM C 857-95, Design Load of A-8, 8,000 lbs. Capable of withstanding a Static Load of >22,880 lbf transferred through a 10" x 10" steel plate centered on the cover and body.
- Compliant with AASHTO, Design Load of H-20; ASTM C 857-95, Design Load of A-16, 16,000 lbs. Capable of withstanding a Static Load of >45,760 lbf transferred through a 10" x 20" steel plate centered on the cover and body.
- This product is designed to withstand H-10 and H-20 loading in incidental or non-deliberate traffic areas. Not intended to be installed in roadways.

Shipping Configuration

- **Single Bodies – 12":** Unit, 12 assemblies, = 69.5 cu. ft.; 1,680.0 lbs.
- **Single Bodies – 18":** Unit, 6 assemblies, = 53.8 cu. ft.; 1,002.0 lbs.
- **Single Bodies – 24":** Unit, 6 assemblies, = 69.5 cu. ft.; 1,152.0 lbs.

Standard Test Method	Properties of Raw Material	ASTM Designation	Test Results
Compressive Strength of Polymer Concretes	Compressive Strength	C 579-96	11,000 psi
Flexural Strength and Modulus of Elasticity of Polymer Concretes	Flexural Strength Modulus of Elasticity	C 580-93	1,800 psi 2,900,000 psi
Chemical Resistance of Polymer Concretes	Chemical Resistance	C 267-97	Pass[4]
Determination of Impact Resistance by means of a Tup (falling weight)	Impact Resistance	D 2444-93	Pass[5]

[1]AASHTO H-10, ASTM C 857, A-8, 8,000 lbs Design Load. Static Vertical Load Rating >22,880 lbf, AASHTO H-20, ASTM C 857 A-16, 16,000 lbs Design Load. Static Vertical Load Rating > 45,760 lbf
[2]Coefficient of Friction (ASTM C1028) >0.5
[3]Western Underground Committee, Guide 3.6
[4]Specimens exposed to ten reagents (alkalis, acids and petroleum distillates) experience <2% weight and dimensional change and retain >75% of average Compressive Strength. Listing of reagents and test reports available upon request.
[5]Capable of withstanding 70 ft lbs impact with a type "C" Tup.

JUNCTION BOX* SPECIFICATIONS

N.T.S.

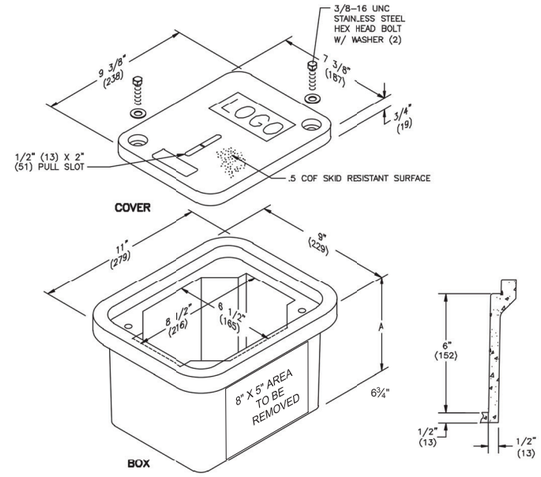

Covers (Blank unless logo is specified)

	DESCRIPTION	PART NO.	WEIGHT #	DESIGN/TEST LOAD #	ANSI TIER
(S)	W/2 Bolts	PC0608HA00	4 (1.8 kg)	15,000 / 22,500	15
(S)	Gasketed w/4 Bolts	PC0608HG00	4 (1.8 kg)	15,000 / 22,500	15

• Gasketed covers and bolt grommets must be usec with a gasketed box. Gaskets reduce the inflow of fluids but do not make the enclosure water tight

Boxes (Stackable with self-aligning, replaceable EZ-Nut)

	DESCRIPTION	PART NO.	WEIGHT #	DIMENSION A	DESIGN/TEST LOAD #	ANSI TIER
(S)	Open Bottom	PC0608BA06	14 (6.4 kg)	6 3/4" (171 mm)	15,000 / 22,500	15
(S)	Open Bottom w/Gasket	PC0608BG06	14 (6.4 kg)	6 3/4" (171 mm)	15,000 / 22,500	15
(S)	Solid Bottom	PC0608DA06	15 (6.8 kg)	7 1/4" (184 mm)	15,000 / 22,500	15
(S)	Solid Bottom w/Gasket	PC0608DA06	15 (6.8 kg)	7 1/4" (184 mm)	15,000 / 22,500	15

Dimensions & weights in parentheses are metric equivalent.

PULL BOX* SPECIFICATIONS

N.T.S.

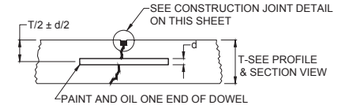

TYPE C DOWELED - CONTRACTION

TYPE D DUMMY - CONTRACTION

NOTES:

1. BLACK SHADED AREA IS JOINT SEALER.
2. GROOVE MAY BE FORMED OR SAWED.
3. EARLY ENTRY SAW CUTS TO BE CUT MINIMUM OF 7/64" X 1/8" WIDE.
4. FINAL SAW CUT TO BE 1/8" X 1/8" WIDE.

JOINTING FOR RIGID PAVEMENT

N.T.S.

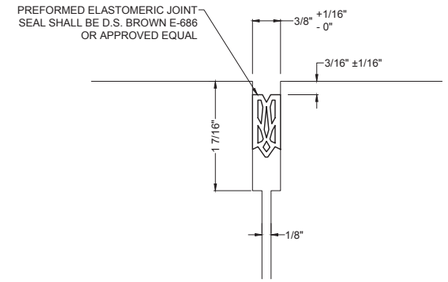

PREFORMED JOINT SEAL TO BE INSTALLED PER MANUFACTURERS RECOMMENDATIONS.

JOINT SEAL DETAIL

N.T.S.

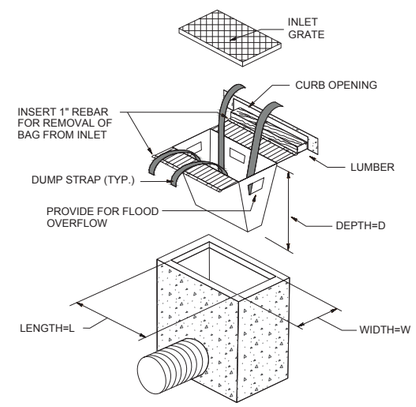

INLET FILTER DETAIL

N.T.S.

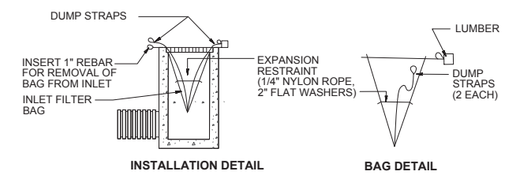

INSTALLATION DETAIL **BAG DETAIL**

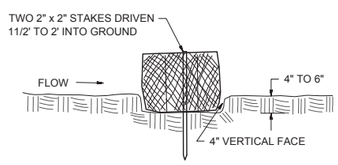

EMBEDDING DETAIL

N.T.S.

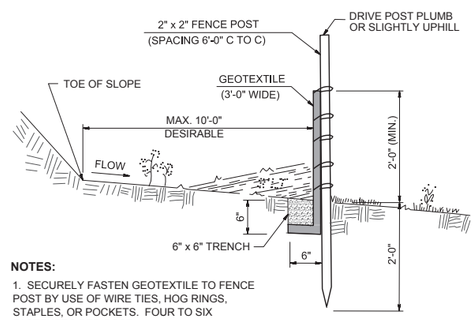

NOTES:

1. SECURELY FASTEN GEOTEXTILE TO FENCE POST BY USE OF WIRE TIES, HOG RINGS, STAPLES, OR POCKETS. FOUR TO SIX FASTENERS PER POST.
2. BURY BOTTOM 1'-0" OF GEOTEXTILE AND TAMP IN PLACE.
3. SECURELY FASTEN ENDS OF INDIVIDUAL ROLLS OF GEOTEXTILE TO A POST BY WRAPPING EACH END OF THE GEOTEXTILE AROUND THE POST TWICE AND ATTACHING AS SPECIFIED IN NOTE 1 ABOVE. DO NOT SPLICE INDIVIDUAL ROLLS AT LOW POINTS.
4. SET SILT FENCE WITHIN PROJECT LIMITS. 10'-0" IS DESIRABLE.

SILT FENCE

N.T.S.

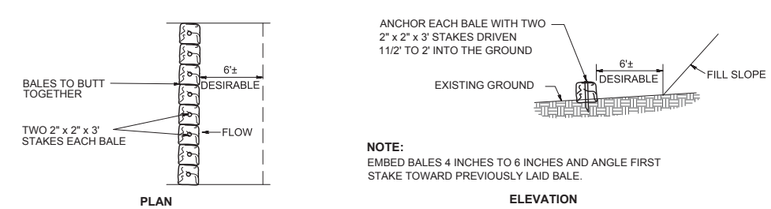

PLAN **ELEVATION**

NOTE:
EMBED BALES 4 INCHES TO 6 INCHES AND ANGLE FIRST STAKE TOWARD PREVIOUSLY LAID BALE.

HAY BALES

N.T.S.

*OR APPROVED EQUAL

NO.	REVISIONS	DATE	BY	CHK	APR
2	REVISED PER FAA COMMENTS.	04/23/2018	M.M.		
1	REVISED PER FAA COMMENTS.	04/09/2018	M.M.		

CSRA
SRA INTERNATIONAL, A CSRA COMPANY
200 DECADON DRIVE
EGG HARBOR TOWNSHIP, NJ 08234
PHONE: (609) 677-8406

FOR

NATIONAL AIRPORT PAVEMENT TEST FACILITY
ATLANTIC CITY AIRPORT, NJ

	NAME	DATE
DRAWN	M. MAZUREK	03/12/2018
CHECKED	H.Y. / J.G.	
FAA APPROVAL DATE:		

REFLECTIVE CRACKING OUTDOOR
PHASE I
CONSTRUCTION DETAILS

PROJECT NO: | SIZE: ANSI D | SCALE: AS NOTED | SHEET 9 OF 10

CAD FILE: REFL-CRACK-OUT1-DTLS.DWG

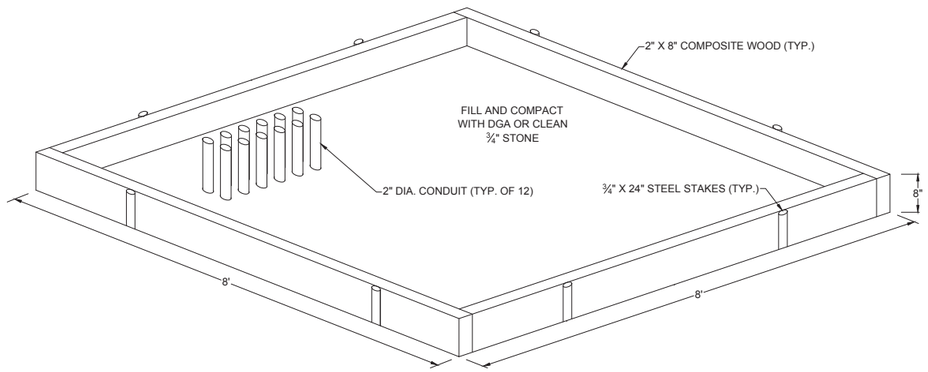

ISOMETRIC VIEW

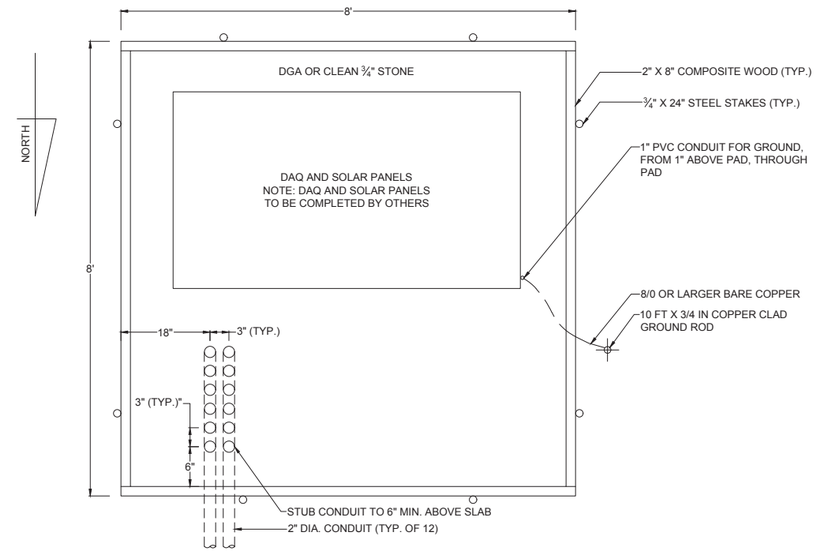

PLAN VIEW

STONE PAD DETAIL

N.T.S.

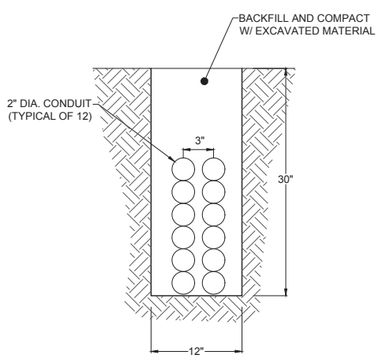

TRENCH DETAIL

N.T.S.

*OR APPROVED EQUAL

NO.	REVISIONS	DATE	BY	CHK	APR
2	REVISED PER FAA COMMENTS.	04/23/2018	M.M.		
1	REVISED PER FAA COMMENTS.	04/09/2018	M.M.		

CSRA
SRA INTERNATIONAL, A CSRA COMPANY
200 DECADON DRIVE
EGG HARBOR TOWNSHIP, NJ 08234
PHONE: (609) 677-8406
FOR
NATIONAL AIRPORT PAVEMENT TEST FACILITY
ATLANTIC CITY AIRPORT, NJ

	NAME	DATE
DRAWN	M. MAZUREK	03/12/2018
CHECKED	H.Y. / J.G.	
FAA APPROVAL DATE:		

REFLECTIVE CRACKING OUTDOOR
PHASE I
DAQ DETAILS

PROJECT NO: | SIZE: ANSI D | SCALE: AS NOTED | SHEET 10 OF 10

CAD FILE: REFL-CRACK-OUT1-DTLS.DWG

APPENDIX B

As-Built Construction Plans

REFLECTIVE CRACKING OUTDOOR PHASE I

AS-BUILT DRAWINGS

NATIONAL AIRPORT PAVEMENT AND MATERIALS RESEARCH CENTER (NAPMRC)
WILLIAM J. HUGHES TECHNICAL CENTER
ATLANTIC CITY AIRPORT, NEW JERSEY

05/31/2019

NEW JERSEY STATE MAP N.T.S.

VICINITY MAP N.T.S.

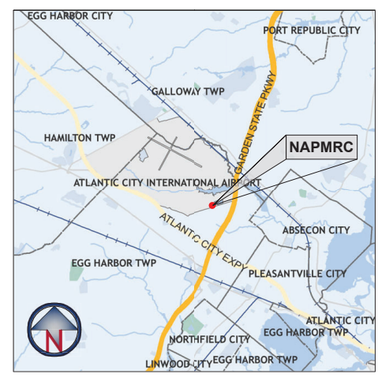

PROJECT LOCATION MAP N.T.S.

AERIAL VIEW OF THE TEST SITE N.T.S.

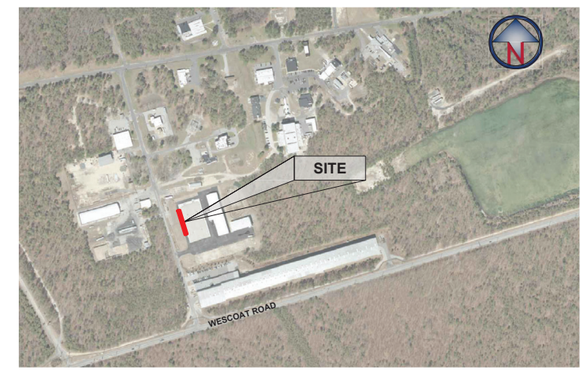

INDEX OF DRAWINGS

SHEET #	SHEET TITLE	DATE	SHEET #	SHEET TITLE	DATE
1 OF 17	COVER SHEET	05/31/2019	10 OF 17	CONSTRUCTION DETAILS	05/31/2019
2 OF 17	SITE ACCESS, HAULING AND STAGING AREA PLAN	05/31/2019	11 OF 17	SUBGRADE ELEVATION MAP	08/10/2018
3 OF 17	SURVEY CONTROL PLAN	05/31/2019	12 OF 17	P-154 ELEVATION MAP	12/11/2018
4 OF 17	EXISTING CONDITIONS, DEMOLITION, EROSION AND SEDIMENT CONTROL PLAN	05/31/2019	13 OF 17	P-154 THICKNESS MAP	12/11/2018
5 OF 17	CONSTRUCTION PLAN	05/31/2019	14 OF 17	P-501 ELEVATION MAP	04/02/2019
6 OF 17	TEMPERATURE LOAD ONLY INSTRUMENTATION PLAN	05/31/2019	15 OF 17	P-501 THICKNESS MAP	04/02/2019
7 OF 17	TEMPERATURE AND TRAFFIC LOADS INSTRUMENTATION PLAN	05/31/2019	16 OF 17	P-401 ELEVATION MAP	05/01/2019
8 OF 17	INSTRUMENTATION SECTION VIEWS AND PHOTOGRAPHS	05/31/2019	17 OF 17	P-401 THICKNESS MAP	05/01/2019
9 OF 17	CONSTRUCTION DETAILS	05/31/2019			

FEDERAL AVIATION ADMINISTRATION

PREPARED BY:

GENERAL DYNAMICS
Information Technology
SRA INTERNATIONAL, A CSRA COMPANY
200 DECADON DRIVE
EGG HARBOR TOWNSHIP, NJ 08234
PHONE: (609) 677-8406

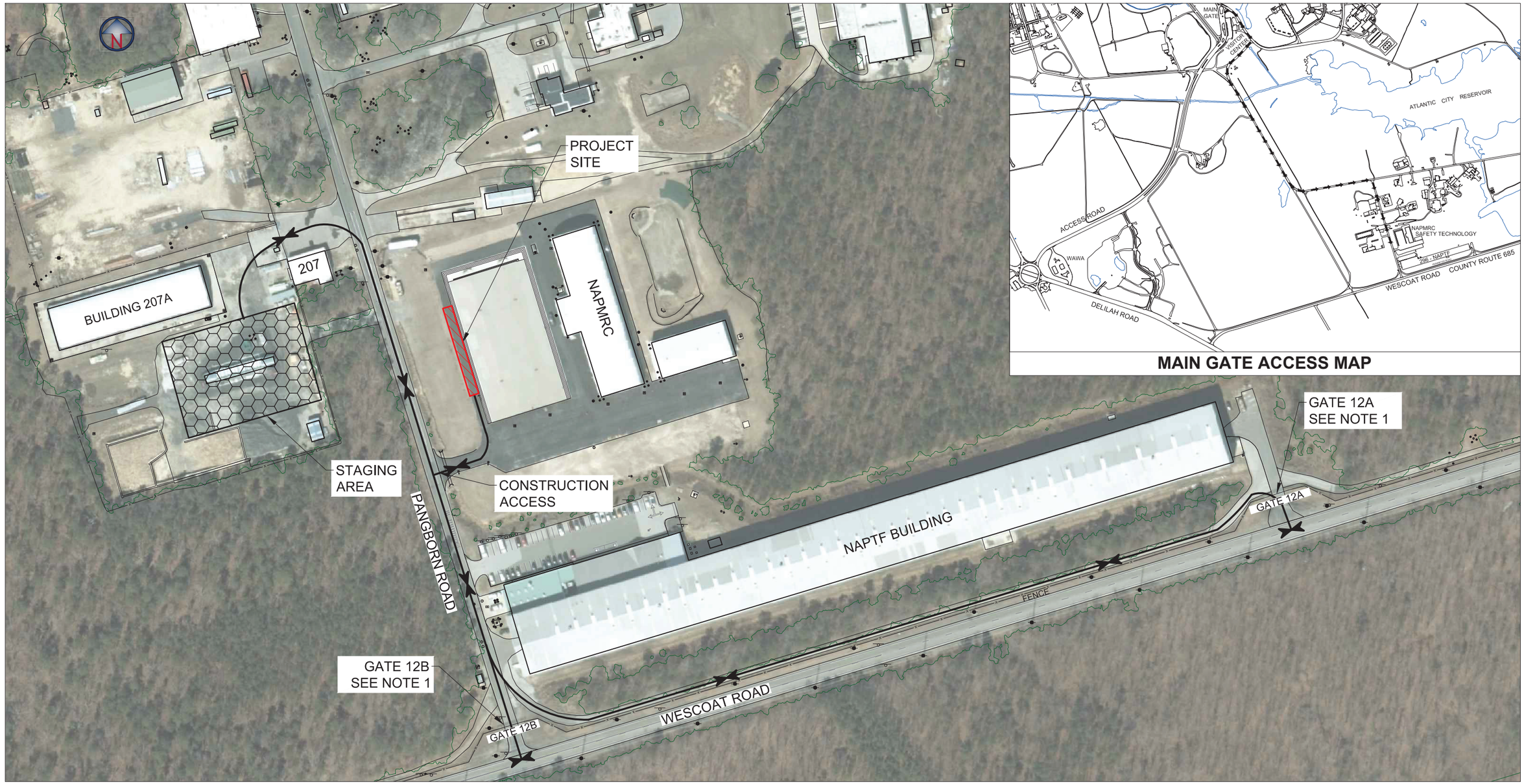

NOTES:

1. THE CONTRACTORS PRIMARY ACCESS WILL BE THROUGH THE MAIN GATE. HOWEVER. ACCESS THROUGH GATE 12A OR 12B CAN BE REQUESTED FOR PAVING AND DEMOLITION ACTIVITIES BY CONTACTING MURPHY FLYNN AT 609·485-5318 OR BEN MAHAFFAY AT 609-485·8555 AT LEAST 72 HOURS IN ADVANCE.
2. LOCATION OF THE CONTRACTORS STAGING AREA SHOWN IS APPROXIMATE. THE EXACT LOCATION WILL BE DETERMINED IN THE FIELD BY THE ENGINEER.
3. THE CONTRACTOR STAGING AREA CAN BE UTILIZED FOR THE CONTRACTORS FIELD OFFICE, PARKING OF COMPANY AND EMPLOYEE VEHICLES AND FOR STORAGE OF MATERIALS.
4. TRACKED CONSTRUCTION EQUIPMENT MAY BE PARKED OVERNIGHT IN THE CONSTRUCTION AREA. ALL OTHER PARKING AND ALL EQUIPMENT STORAGE SHALL BE IN THE STAGING AREA.
5. CONTRACTOR SHALL BE RESPONSIBLE FOR TEMPORARY DRAINAGE. GRADING, EROSION CONTROL STABILIZATION AND UTILITY CONNECTIONS IN STAGING AREAS AND SHALL RESTORE SITE TO ORIGINAL CONDITIONS UPON COMPLETION OF THE WORK.
6. ALL CONSTRUCTION AREAS SHALL BE CONSIDERED LAND DISTURBANCE AREAS.
7. OVERHEAD UTILITIES AND POLES BELONG TO FAA.
8. CONTRACTOR MUST VERIFY UTILITY CAPACITY IS ADEQUATE FOR PROJECT NEEDS. IF CAPACITY IS INSUFFICIENT. CONTRACTOR IS RESPONSIBLE FOR UPGRADES OR NEW LINES.
9. CONTRACTOR IS RESPONSIBLE FOR ALL UTILITY CONNECTIONS, CONNECTION REQUIREMENTS, AND COORDINATION WITH UTILITY OWNERS.
10. PANGBORN ROAD MUST BE KEPT CLEAN OF CONSTRUCTION DEBRIS AND AVAILABLE FOR USE BY FACILITY VEHICLES.

LEGEND:

- X — FENCE
- HAUL ROUTE
- CONSTRUCTION SITE
- STAGING AREA

80' 0 80' 160' 240'

GRAPHIC SCALE

1" = 80'

NO.	REVISIONS	DATE	BY	CHK	APR

GENERAL DYNAMICS
Information Technology
200 DECADON DRIVE
EGG HARBOR TOWNSHIP
NEW JERSEY 08234
PHONE: (609) 677-8543

FOR

NATIONAL AIRPORT PAVEMENT TEST FACILITY
ATLANTIC CITY AIRPORT
NEW JERSEY 08234

	NAME	DATE
DRAWN	M. MAZUREK	05/31/2019
CHECKED	H.Y. / J.G.	
FAA APPROVAL DATE:		

REFLECTIVE CRACKING OUTDOOR

PHASE I - AS-BUILT

SITE ACCESS, HAULING AND STAGING AREA PLAN

PROJECT NO: | SIZE: ANSI D | SCALE: AS NOTED | SHEET 2 OF 17

CAD FILE: REFL-CRACK-OUT1-GNRL-ABLT.DWG

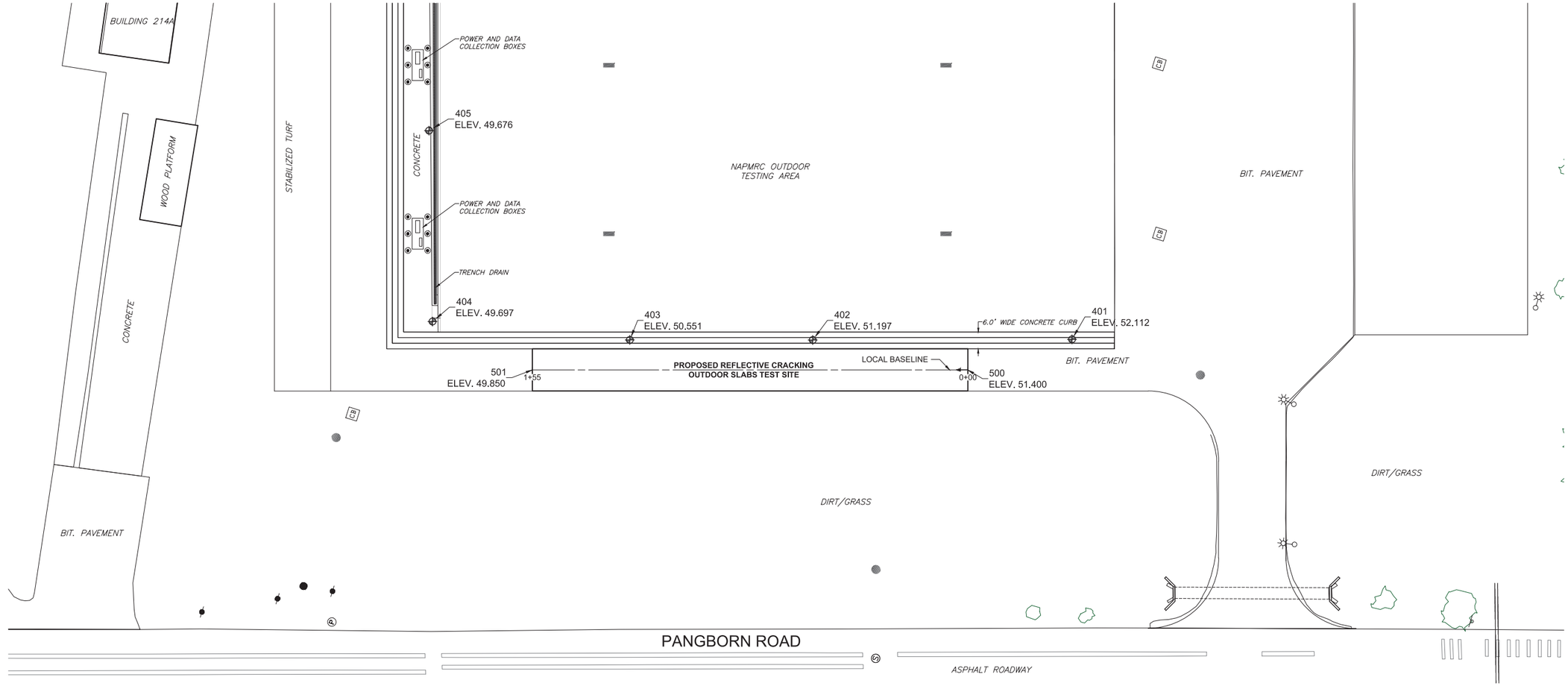

PLAN VIEW

SCALE: 1"=20'

SURVEY CONTROL POINTS

POINT #	NAD 83 NORTHING	NAD 83 EASTING	STATION	OFFSET	ELEVATION
401	218441.74	476086.06	-37.04	10.87	52.112
402	218529.81	476058.61	55.21	10.63	51.197
403	218592.05	476039.42	120.34	10.65	50.551
404	218661.06	476024.95	190.55	17.18	49.697
405	218682.30	476089.50	191.81	85.12	49.676
500	218473.92	476064.74	0.00	0.00	51.400
501	218622.02	476019.03	155.00	0.00	49.850

NOTES:

1. THE PROJECT AREA IS LOCATED NEAR THE NATIONAL AIRPORT PAVEMENT AND MATERIALS RESEARCH CENTER (NAPMRC) WITHIN THE WILLIAM J. HUGHES TECHNICAL CENTER, LOCATED AT THE ATLANTIC CITY INTERNATIONAL AIRPORT, EGG HARBOR TOWNSHIP, NEW JERSEY 08405.

2. THE HORIZONTAL CONTROL NETWORK IS REFERENCED TO THE NEW JERSEY STATE PLANE COORDINATE SYSTEM, NORTH AMERICAN DATUM OF 1983 (NAD83).

STATION AND OFFSET COORDINATES ARE REFERENCED TO A LOCAL BASE LINE ALIGNED WITH THE TESTING AREA CENTER LINE.

3. THE VERTICAL CONTROL NETWORK IS REFERENCED TO THE NORTH AMERICAN VERTICAL DATUM OF 1988 (NAVD88).

4. BASE INFORMATION TAKEN FROM PLANS BY OTHERS:

- HIGH TEMPERATURE PAVEMENT TEST FACILITY, EXISTING CONDITIONS & DEMOLITION PLAN, DRAWING NUMBER 2275550-C100.
- HIGH TEMPERATURE PAVEMENT TEST FACILITY, SITE LAYOUT PLAN, DRAWING NUMBER 2275550-C110, DATED 12/21/12, LAST REVISED 10/26/15.
- HIGH TEMPERATURE PAVEMENT TEST FACILITY, SITE UTILITY PLAN, DRAWING NUMBER 2275550-C130, DATED 12/21/12, LAST REVISED 10/26/15.
- CAD FILE WITH ACY BASE PLAN CAPTURED DURING 2015 BASEMAP PROJECT.

4. ALL DIMENSIONS ARE SHOWN IN UNITED STATES SURVEY FEET UNITS.

LEGEND:

- CONTROL POINT
- UTILITY POLE
- BOLLARD
- CATCH BASIN
- SEWER MANHOLE
- ELECTRICAL MANHOLE
- LIGHT POLE
- SIGN

CONTROL POINT MARKER DETAIL

EACH CONTROL POINT LOCATION IS MARKED WITH A MAGNETIC NAIL WITH WASHER. THE CONTROL POINT NUMBER IS ENGRAVED ON EACH WASHER.

20' 0 20' 40' 60'

GRAPHIC SCALE

1" = 20'

NO.	REVISIONS	DATE	BY	CHK	APR

GENERAL DYNAMICS
Information Technology
200 DECADON DRIVE
EGG HARBOR TOWNSHIP
NEW JERSEY 08234
PHONE: (609) 677-8543

FOR

NATIONAL AIRPORT PAVEMENT TEST FACILITY
ATLANTIC CITY AIRPORT
NEW JERSEY 08234

	NAME	DATE
DRAWN	M. MAZUREK	05/31/2019
CHECKED	H.Y. / J.G.	
FAA APPROVAL DATE:		

REFLECTIVE CRACKING OUTDOOR

PHASE I - AS-BUILT SURVEY CONTROL PLAN

PROJECT NO: | SIZE: ANSI D | SCALE: AS NOTED | SHEET 3 OF 17

CAD FILE: REFL-CRACK-OUT1-GNRL-ABLT.DWG

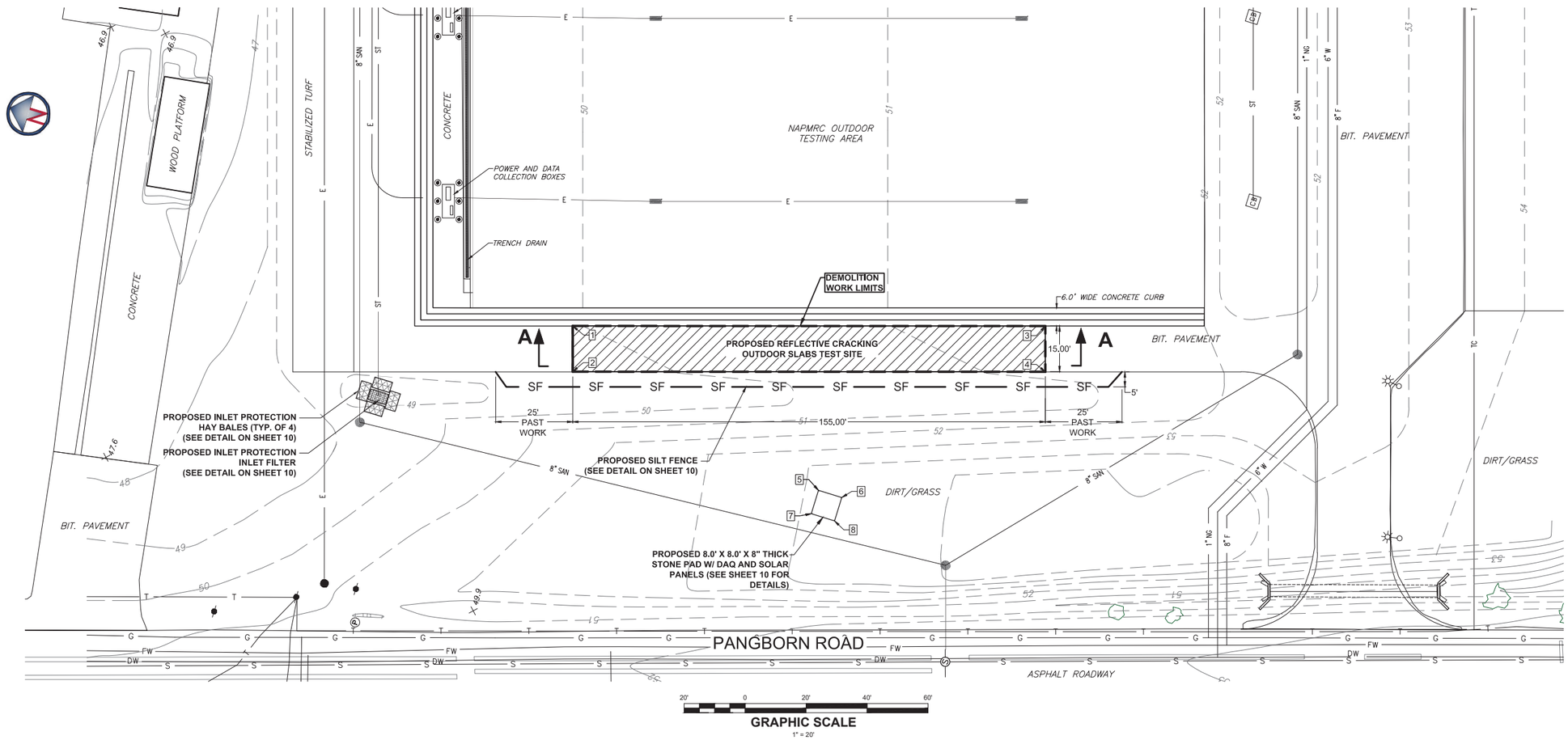

PLAN VIEW

SCALE: 1"=20'

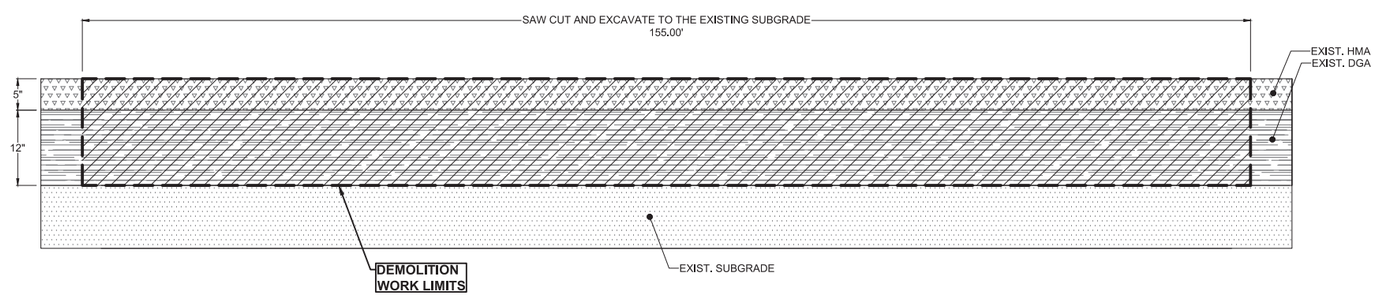

SECTION VIEW A-A

HORIZONTAL SCALE: 1"=10'

VERTICAL SCALE: 1"=1'

LEGEND - EXISTING:

- UTILITY POLE
- BOLLARD
- CATCH BASIN
- SEWER MANHOLE
- ELECTRICAL MANHOLE
- LIGHT POLE
- SIGN
- 52 — ELEVATION CONTOUR LINE
- E — ELECTRIC LINE
- T — TELECOMMUNICATION LINE
- G — GAS LINE
- DW — DOMESTIC WATER LINE
- FW — FIRE SYSTEM WATER LINE
- S — SEWER LINE
- ST — STORM LINE
- EXISTING SUBGRADE COURSE
- EXISTING AGGREGATE BASE (DGA)
- EXISTING HOT MIX ASPHALT (HMA)

LEGEND - PROPOSED:

- INLET FILTER
- HAY BALE
- SF — SILT FENCE
- DEMOLITION LIMITS

NOTES:

1. BASE INFORMATION TAKEN FROM PLANS BY OTHERS:
   - HIGH TEMPERATURE PAVEMENT TEST FACILITY, EXISTING CONDITIONS & DEMOLITION PLAN, DRAWING NUMBER 2275550-C100.
   - HIGH TEMPERATURE PAVEMENT TEST FACILITY, SITE LAYOUT PLAN, DRAWING NUMBER 2275550-C110, DATED 12/21/12, LAST REVISED 10/26/15.
   - HIGH TEMPERATURE PAVEMENT TEST FACILITY, SITE UTILITY PLAN, DRAWING NUMBER 2275550-C130, DATED 12/21/12, LAST REVISED 10/26/15.
   - CAD FILE WITH ACY BASE PLAN CAPTURED DURING 2015 BASEMAP PROJECT.
2. ALL DIMENSIONS ARE SHOWN IN UNITED STATES SURVEY FEET UNITS.
3. THE LOCATION OF THE EXISTING UNDERGROUND UTILITIES SHOWN ON THIS PLAN HAVE BEEN TAKEN FROM THE ABOVE REFERENCED PLANS. COMPLETENESS OF LOCATION OF UNDERGROUND UTILITIES AND STRUCTURES IS NOT GUARANTEED. ADDITIONAL UNDERGROUND UTILITIES MAY BE PRESENT AND NOT SHOWN ON THIS PLAN. USERS OF THIS PLAN MUST TAKE THE NECESSARY PRECAUTIONS TO ENSURE THE SAFETY OF PERSONNEL AND AVOID THE INTERRUPTION OF UTILITY SERVICES TO THE FACILITY.
4. EXISTING DGA MAY BE REUSED IN LIEU OF P-154 IF SAMPLES OBTAINED DURING EXCAVATION MEET THE GRADATIONS OF THE SPECIFICATION.

DEMOLITION LIMITS POINT TABLE

POINT #	NAD 83 NORTHING	NAD 83 EASTING	STATION	OFFSET
1	218624.24	476026.20	155.00	7.50
2	218619.81	476011.86	155.00	-7.50
3	218476.13	476071.91	0.00	7.50
4	218471.71	476057.58	0.00	-7.50

PAD CORNER POINTS TABLE

POINT #	NAD 83 NORTHING	NAD 83 EASTING	STATION	OFFSET
5	218531.32	475998.45	74.40	-46.42
6	218523.32	475998.45	66.76	-48.78
7	218531.32	475990.45	76.76	-54.06
8	218523.32	475990.45	69.12	-56.42

NO.	REVISIONS	DATE	BY	CHK	APR

GENERAL DYNAMICS
Information Technology
200 DECADON DRIVE
EGG HARBOR TOWNSHIP
NEW JERSEY 08234
PHONE: (609) 677-8543

FOR

NATIONAL AIRPORT PAVEMENT TEST FACILITY
ATLANTIC CITY AIRPORT
NEW JERSEY 08234

	NAME	DATE
DRAWN	M. MAZUREK	05/31/2019
CHECKED	H.Y. / J.G.	
FAA APPROVAL DATE:		

REFLECTIVE CRACKING OUTDOOR

PHASE I - AS-BUILT EXISTING CONDITIONS, DEMOLITION, EROSION & SEDIMENT CONTROL

PROJECT NO: | SIZE: ANSI D | SCALE: AS NOTED | SHEET 4 OF 17

CAD FILE: REFL-CRACK-OUT1-GNRL-ABLT.DWG

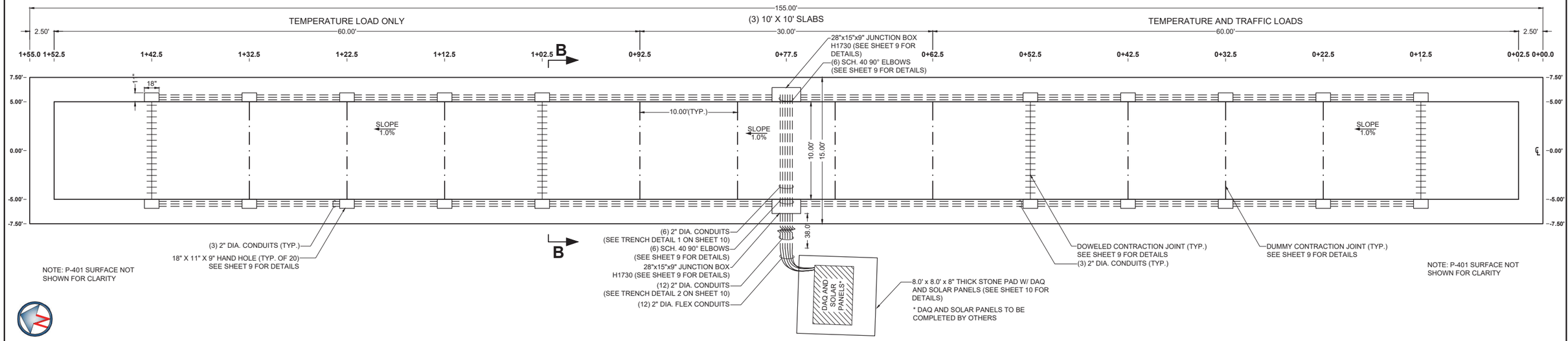

PLAN VIEW

SCALE: 1"=5'

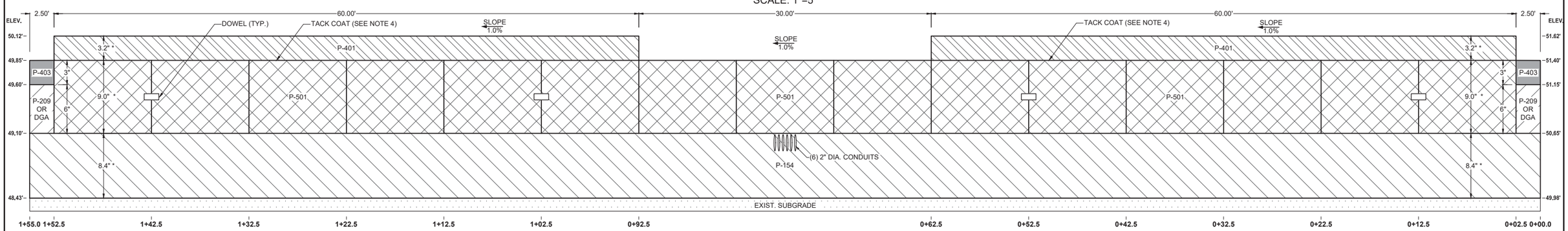

PROFILE VIEW

HORIZONTAL SCALE: 1"=5'
VERTICAL SCALE: 1"=0.5'

*AVERAGE LAYER THICKNESS BASED ON LiDAR DATA.

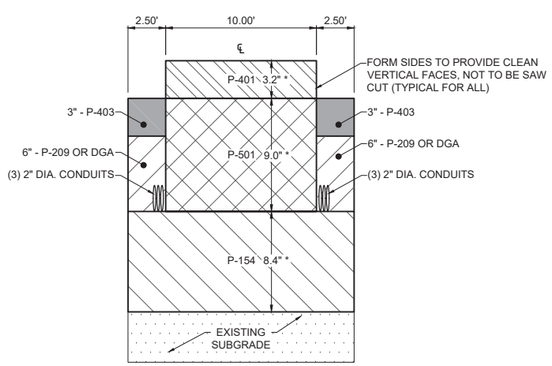

TYPICAL SECTION VIEW B-B

HORIZONTAL SCALE: 1"=5'
VERTICAL SCALE: 1"=0.5'

NOTES:

1. PLACE P-501 IN ONE (1) LIFT.
2. PLACE P-401 IN ONE (1) COMPACTED LIFT.
3. PLACE P-154 IN ONE (1) COMPACTED LIFT.
4. STRAIGHT ASPHALT BINDER (I.E., PG 64-22) SHALL BE APPLIED BETWEEN LIFTS AND ON TOP OF THE CONCRETE AS A TACK COAT, AT AN APPLICATION RATE OF 0.04 – 0.06 GAL/YD2.
5. EXISTING DGA MAY BE REUSED IN LIEU OF P-154 IF SAMPLES OBTAINED DURING EXCAVATION MEET THE GRADATIONS OF THE SPECIFICATION.
6. P-501 CONCRETE TO HAVE BURLAP DRAG FINISH.

5' 0 5' 10' 15'

GRAPHIC SCALE
1" = 5'

LEGEND:

- TYPE C DOWELED CONTRACTION JOINT
- DUMMY CONTRACTION JOINT
- CONDUIT
- JUNCTION BOX
- PULL BOX
- P-401 PLANT MIX BITUMINOUS PAVEMENT
- P-501 - CONCRETE PAVEMENT (PORTLAND CEMENT CONCRETE)
- P-154 - SUBBASE
- P-209 OR DGA
- P-403 SURFACE COURSE

NO.	REVISIONS	DATE	BY	CHK	APR

GENERAL DYNAMICS
Information Technology
200 DECADON DRIVE
EGG HARBOR TOWNSHIP
NEW JERSEY 08234
PHONE: (609) 677-8543

FOR

NATIONAL AIRPORT PAVEMENT TEST FACILITY
ATLANTIC CITY AIRPORT
NEW JERSEY 08234

	NAME	DATE
DRAWN	M. MAZUREK	05/31/2019
CHECKED	J.Z. / J.G.	
FAA APPROVAL DATE:		

REFLECTIVE CRACKING OUTDOOR

PHASE I - AS-BUILT CONSTRUCTION PLAN

PROJECT NO: | SIZE: ANSI D | SCALE: AS NOTED | SHEET 5 OF 15

CAD FILE: REFL-CRACK-OUT1-CONS-ABLT.DWG

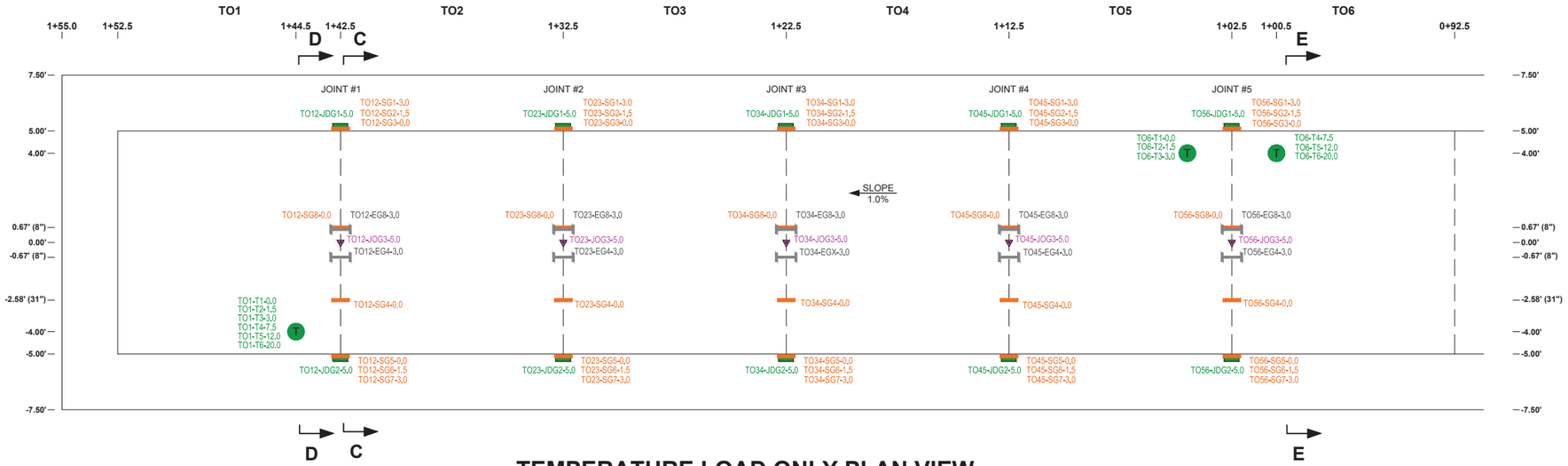

TEMPERATURE LOAD ONLY PLAN VIEW

SCALE: 1"=3'

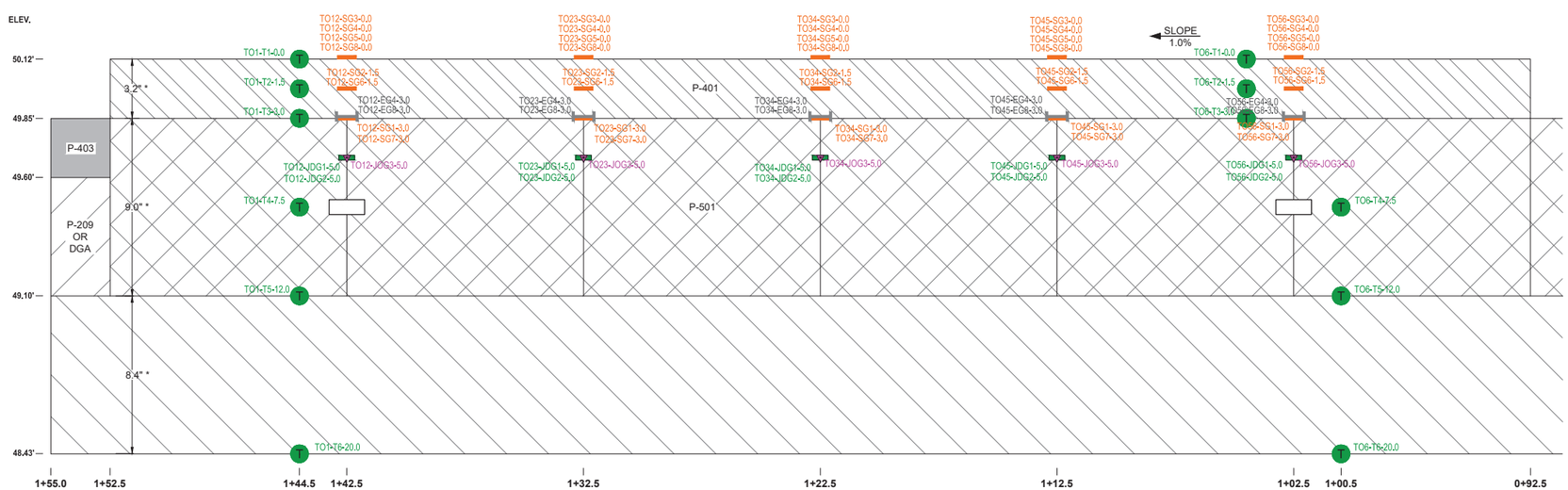

TEMPERATURE LOAD ONLY PROFILE VIEW

HORIZONTAL SCALE: 1"=3'

VERTICAL SCALE: 1"=0.3'

3' 0 3' 6' 9'

GRAPHIC SCALE

1" = 3'

PROPOSED INSTRUMENTATION

ID	SENSOR	X STA. (FEET)	Y OFFSET (FEET)	DEPTH FROM TOP LAYER SURFACE (IN)
1	TO1-T1-0.0	144.50	-4.00	0.0
2	TO1-T2-1.5	144.50	-4.00	1.5
3	TO1-T3-3.0	144.50	-4.00	3.0
4	TO1-T4-7.5	144.50	-4.00	7.5
5	TO1-T5-12.0	144.50	-4.00	12.0
6	TO1-T6-20.0	144.50	-4.00	20.0
7	TO6-T1-0.0	104.50	4.00	0.0
8	TO6-T2-1.5	104.50	4.00	1.5
9	TO6-T3-3.0	104.50	4.00	3.0
10	TO6-T4-7.5	100.50	4.00	7.5
11	TO6-T5-12.0	100.50	4.00	12.0
12	TO6-T6-20.0	100.50	4.00	20.0
135	TO12-EG4-3.0	142.50	-0.66	3.0
22	TO12-EG8-3.0	142.50	0.67	3.0
20	TO12-JDG1-5.0	142.50	5.00	5.0
21	TO12-JDG2-5.0	142.50	-5.00	5.0
155	TO12-JOG3-5.0	142.50	0.00	5.0
13	TO12-SG1-3.0	142.50	5.00	3.0
14	TO12-SG2-1.5	142.50	5.00	1.5
15	TO12-SG3-0.0	142.50	5.00	0.0
145	TO12-SG4-0.0	142.50	-2.58	0.0
17	TO12-SG5-0.0	142.50	-5.00	0.0
18	TO12-SG6-1.5	142.50	-5.00	1.5
19	TO12-SG7-3.0	142.50	-5.00	3.0
16	TO12-SG8-0.0	142.50	0.67	0.0
136	TO23-EG4-3.0	132.50	-0.66	3.0
33	TO23-EG8-3.0	132.50	0.67	3.0
31	TO23-JDG1-5.0	132.50	5.00	5.0
32	TO23-JDG2-5.0	132.50	-5.00	5.0
156	TO23-JOG3-5.0	132.50	0.00	5.0
24	TO23-SG1-3.0	132.50	5.00	3.0
25	TO23-SG2-1.5	132.50	5.00	1.5
26	TO23-SG3-0.0	132.50	5.00	0.0
146	TO23-SG4-0.0	132.50	-2.58	0.0
28	TO23-SG5-0.0	132.50	-5.00	0.0
29	TO23-SG6-1.5	132.50	-5.00	1.5
30	TO23-SG7-3.0	132.50	-5.00	3.0
27	TO23-SG8-0.0	132.50	0.67	0.0
44	TO34-EG8-3.0	122.50	0.67	3.0
137	TO34-EGX-3.0	122.50	-0.66	3.0

ID	SENSOR	X STA. (FEET)	Y OFFSET (FEET)	DEPTH FROM TOP LAYER SURFACE (IN)
42	TO34-JDG1-5.0	122.50	5.00	5.0
43	TO34-JDG2-5.0	122.50	-5.00	5.0
157	TO34-JOG3-5.0	122.50	0.00	5.0
35	TO34-SG1-3.0	122.50	5.00	3.0
36	TO34-SG2-1.5	122.50	5.00	1.5
37	TO34-SG3-0.0	122.50	5.00	0.0
147	TO34-SG4-0.0	122.50	-2.58	0.0
39	TO34-SG5-0.0	122.50	-5.00	0.0
40	TO34-SG6-1.5	122.50	-5.00	1.5
41	TO34-SG7-3.0	122.50	-5.00	3.0
38	TO34-SG8-0.0	122.50	0.67	0.0
138	TO45-EG4-3.0	112.50	-0.66	3.0
55	TO45-EG8-3.0	112.50	0.67	3.0
53	TO45-JDG1-5.0	112.50	5.00	5.0
54	TO45-JDG2-5.0	112.50	-5.00	5.0
158	TO45-JOG3-5.0	112.50	0.00	5.0
46	TO45-SG1-3.0	112.50	5.00	3.0
47	TO45-SG2-1.5	112.50	5.00	1.5
48	TO45-SG3-0.0	112.50	5.00	0.0
148	TO45-SG4-0.0	112.50	-2.58	0.0
50	TO45-SG5-0.0	112.50	-5.00	0.0
51	TO45-SG6-1.5	112.50	-5.00	1.5
52	TO45-SG7-3.0	112.50	-5.00	3.0
49	TO45-SG8-0.0	112.50	0.67	0.0
139	TO56-EG4-3.0	102.50	-0.66	3.0
66	TO56-EG8-3.0	102.50	0.67	3.0
64	TO56-JDG1-5.0	102.50	5.00	5.0
65	TO56-JDG2-5.0	102.50	-5.00	5.0
159	TO56-JOG3-5.0	102.50	0.00	5.0
57	TO56-SG1-3.0	102.50	5.00	3.0
58	TO56-SG2-1.5	102.50	5.00	1.5
59	TO56-SG3-0.0	102.50	5.00	0.0
149	TO56-SG4-0.0	102.50	-2.58	0.0
61	TO56-SG5-0.0	102.50	-5.00	0.0
62	TO56-SG6-1.5	102.50	-5.00	1.5
63	TO56-SG7-3.0	102.50	-5.00	3.0
60	TO56-SG8-0.0	102.50	0.67	0.0

*AVERAGE LAYER THICKNESS BASED ON LiDAR DATA.

INSTRUMENT KEY AND QUANTITY

	EG	EMBEDDED DYNATEST STRAIN GAGE	10
	SG	SURFACE STRAIN GAGE	40
	JDG	JOINT DISPLACEMENT GAGE	10
	T	THERMOCOUPLE	12
	JOG	(WILL'S) JOINT OPENING GAGE	5

LEGEND:

- P-401 PLANT MIX BITUMINOUS PAVEMENT
- P-501 - CONCRETE PAVEMENT (PORTLAND CEMENT CONCRETE)
- P-154 - SUBBASE
- P-403 SURFACE COURSE

NO.	REVISIONS	DATE	BY	CHK	APR

GENERAL DYNAMICS
Information Technology
200 DECADON DRIVE
EGG HARBOR TOWNSHIP
NEW JERSEY 08234
PHONE: (609) 677-8543

FOR

NATIONAL AIRPORT PAVEMENT TEST FACILITY
ATLANTIC CITY AIRPORT
NEW JERSEY 08234

	NAME	DATE
DRAWN	M. MAZUREK	05/31/2019
CHECKED	H.Y. / J.G.	
FAA APPROVAL DATE:		

REFLECTIVE CRACKING OUTDOOR

PHASE I AS-BUILT

TEMPERATURE LOAD ONLY INSTRUMENTATION PLAN

PROJECT NO: | SIZE: ANSI D | SCALE: AS NOTED | SHEET 6 OF 17

CAD FILE: REFL-CRACK-OUT1-INST-ABLT.DWG

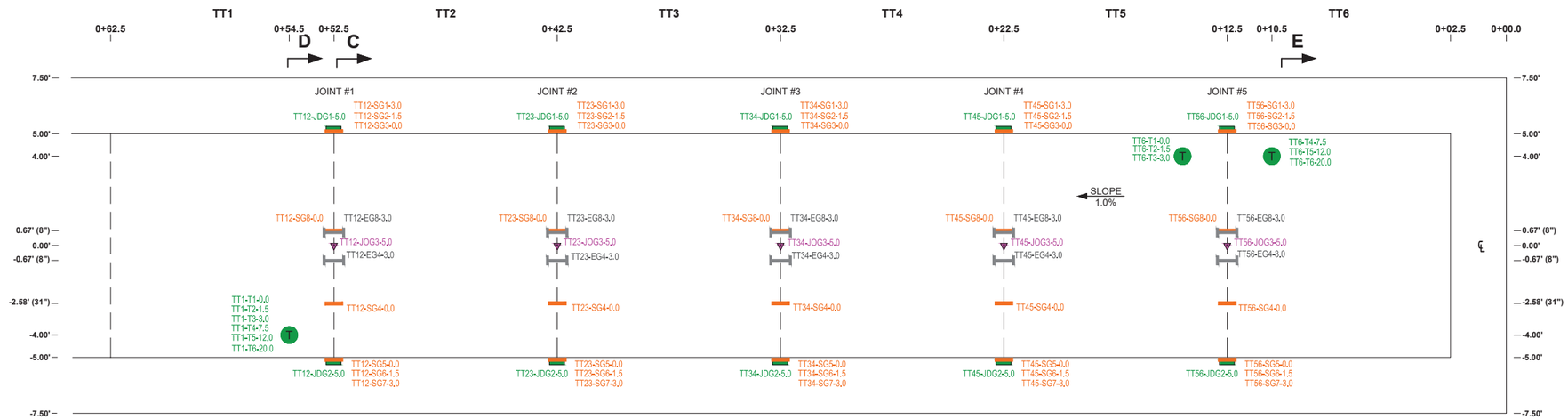

TEMPERATURE AND TRAFFIC LOADS PLAN VIEW

SCALE: 1"=3'

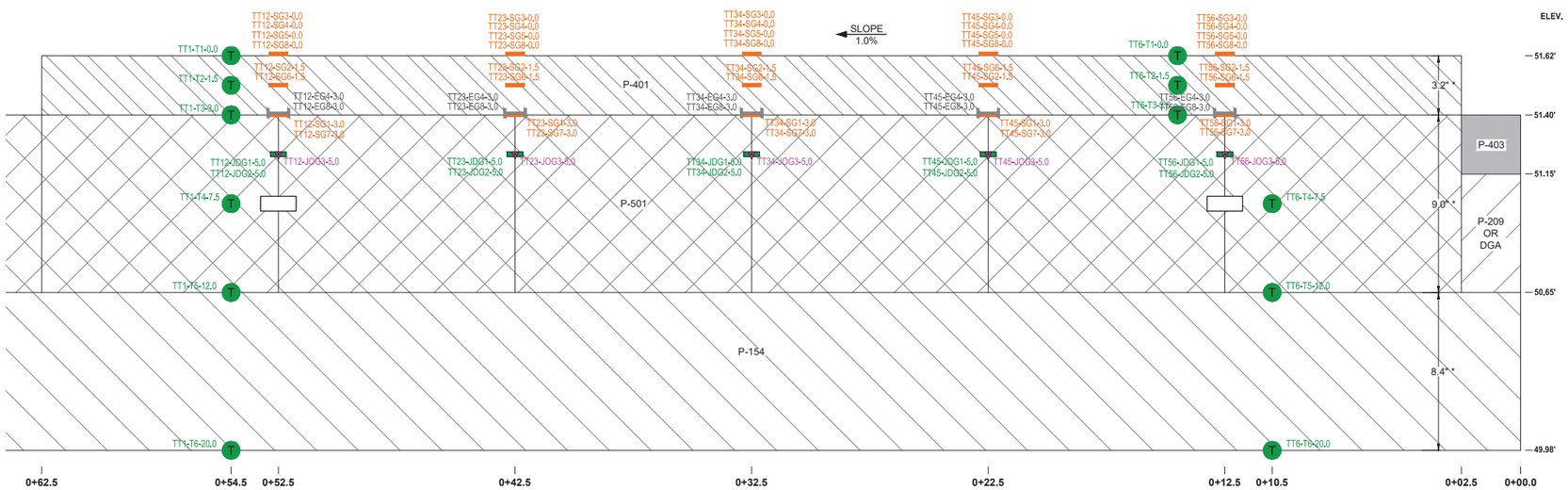

TEMPERATURE AND TRAFFIC LOADS PROFILE VIEW

HORIZONTAL SCALE: 1"=3'

VERTICAL SCALE: 1"=0.3'

3' 0 3' 6' 9'

GRAPHIC SCALE

1" = 3'

PROPOSED INSTRUMENTATION

ID	SENSOR	X STA. (FEET)	Y OFFSET (FEET)	DEPTH FROM TOP LAYER SURFACE (IN)
133	TT1-T1-0.0	54.50	-4.00	0.0
134	TT1-T2-1.5	54.50	-4.00	1.5
69	TT1-T3-3.0	54.50	-4.00	3.0
71	TT1-T4-7.5	54.50	-4.00	7.5
68	TT1-T5-12.0	54.50	-4.00	12.0
70	TT1-T6-20.0	54.50	-4.00	20.0
75	TT6-T1-0.0	14.50	4.00	0.0
76	TT6-T2-1.5	14.50	4.00	1.5
77	TT6-T3-3.0	14.50	4.00	3.0
72	TT6-T4-7.5	10.50	4.00	7.5
73	TT6-T5-12.0	10.50	4.00	12.0
74	TT6-T6-20.0	10.50	4.00	20.0
140	TT12-EG4-3.0	52.50	-0.66	3.0
129	TT12-EG8-3.0	52.50	0.67	3.0
127	TT12-JDG1-5.0	52.50	5.00	5.0
128	TT12-JDG2-5.0	52.50	-5.00	5.0
160	TT12-JOG3-5.0	52.50	0.00	5.0
78	TT12-SG1-3.0	52.50	5.00	3.0
79	TT12-SG2-1.5	52.50	5.00	1.5
80	TT12-SG3-0.0	52.50	5.00	0.0
150	TT12-SG4-0.0	52.50	-2.58	0.0
82	TT12-SG5-0.0	52.50	-5.00	0.0
83	TT12-SG6-1.5	52.50	-5.00	1.5
84	TT12-SG7-3.0	52.50	-5.00	3.0
81	TT12-SG8-0.0	52.50	0.67	0.0
141	TT23-EG4-3.0	42.50	-0.66	3.0
92	TT23-EG8-3.0	42.50	0.67	3.0
90	TT23-JDG1-5.0	42.50	5.00	5.0
91	TT23-JDG2-5.0	42.50	-5.00	5.0
161	TT23-JOG3-5.0	42.50	0.00	5.0
131	TT23-SG1-3.0	42.50	5.00	3.0
132	TT23-SG2-1.5	42.50	5.00	1.5
85	TT23-SG3-0.0	42.50	5.00	0.0
151	TT23-SG4-0.0	42.50	-2.58	0.0
87	TT23-SG5-0.0	42.50	-5.00	0.0
88	TT23-SG6-1.5	42.50	-5.00	1.5
89	TT23-SG7-3.0	42.50	-5.00	3.0
86	TT23-SG8-0.0	42.50	0.67	0.0
142	TT34-EG4-3.0	32.50	-0.66	3.0
103	TT34-EG8-3.0	32.50	0.67	3.0

ID	SENSOR	X STA. (FEET)	Y OFFSET (FEET)	DEPTH FROM TOP LAYER SURFACE (IN)
101	TT34-JDG1-5.0	32.50	5.00	5.0
102	TT34-JDG2-5.0	32.50	-5.00	5.0
162	TT34-JOG3-5.0	32.50	0.00	5.0
94	TT34-SG1-3.0	32.50	5.00	3.0
95	TT34-SG2-1.5	32.50	5.00	1.5
96	TT34-SG3-0.0	32.50	5.00	0.0
152	TT34-SG4-0.0	32.50	-2.58	0.0
98	TT34-SG5-0.0	32.50	-5.00	0.0
99	TT34-SG6-1.5	32.50	-5.00	1.5
100	TT34-SG7-3.0	32.50	-5.00	3.0
97	TT34-SG8-0.0	32.50	0.67	0.0
143	TT45-EG4-3.0	22.50	-0.66	3.0
114	TT45-EG8-3.0	22.50	0.67	3.0
112	TT45-JDG1-5.0	22.50	5.00	5.0
113	TT45-JDG2-5.0	22.50	-5.00	5.0
163	TT45-JOG3-5.0	22.50	0.00	5.0
105	TT45-SG1-3.0	22.50	5.00	3.0
106	TT45-SG2-1.5	22.50	5.00	1.5
107	TT45-SG3-0.0	22.50	5.00	0.0
153	TT45-SG4-0.0	22.50	-2.58	0.0
109	TT45-SG5-0.0	22.50	-5.00	0.0
110	TT45-SG6-1.5	22.50	-5.00	1.5
111	TT45-SG7-3.0	22.50	-5.00	3.0
108	TT45-SG8-0.0	22.50	0.67	0.0
144	TT56-EG4-3.0	12.50	-0.66	3.0
125	TT56-EG8-3.0	12.50	0.67	3.0
123	TT56-JDG1-5.0	12.50	5.00	5.0
124	TT56-JDG2-5.0	12.50	-5.00	5.0
164	TT56-JOG3-5.0	12.50	0.00	5.0
116	TT56-SG1-3.0	12.50	5.00	3.0
117	TT56-SG2-1.5	12.50	5.00	1.5
118	TT56-SG3-0.0	12.50	5.00	0.0
154	TT56-SG4-0.0	12.50	-2.58	0.0
120	TT56-SG5-0.0	12.50	-5.00	0.0
121	TT56-SG6-1.5	12.50	-5.00	1.5
122	TT56-SG7-3.0	12.50	-5.00	3.0
119	TT56-SG8-0.0	12.50	0.67	0.0

*AVERAGE LAYER THICKNESS BASED ON LiDAR DATA.

INSTRUMENT KEY AND QUANTITY

	EG	EMBEDDED DYNATEST STRAIN GAGE	10
	SG	SURFACE STRAIN GAGE	40
	JDG	JOINT DISPLACEMENT GAGE	10
T	T	THERMOCOUPLE	12
	JOG	(WILL'S) JOINT OPENING GAGE	5

LEGEND:

- P-401 PLANT MIX BITUMINOUS PAVEMENT
- P-501 - CONCRETE PAVEMENT (PORTLAND CEMENT CONCRETE)
- P-154 - SUBBASE
- P-403 SURFACE COURSE

NO.	REVISIONS	DATE	BY	CHK	APR

GENERAL DYNAMICS
Information Technology
200 DECADON DRIVE
EGG HARBOR TOWNSHIP
NEW JERSEY 08234
PHONE: (609) 677-8543

FOR

NATIONAL AIRPORT PAVEMENT TEST FACILITY
ATLANTIC CITY AIRPORT
NEW JERSEY 08234

	NAME	DATE
DRAWN	M. MAZUREK	05/31/2019
CHECKED	H.Y. / J.G.	
FAA APPROVAL DATE:		

REFLECTIVE CRACKING OUTDOOR

PHASE I - AS-BUILT TEMPERATURE AND TRAFFIC LOADS INSTRUMENTATION PLAN

PROJECT NO: | SIZE: ANSI D | SCALE: AS NOTED | SHEET 7 OF 17

CAD FILE: REFL-CRACK-OUT1-INST-ABLT.DWG

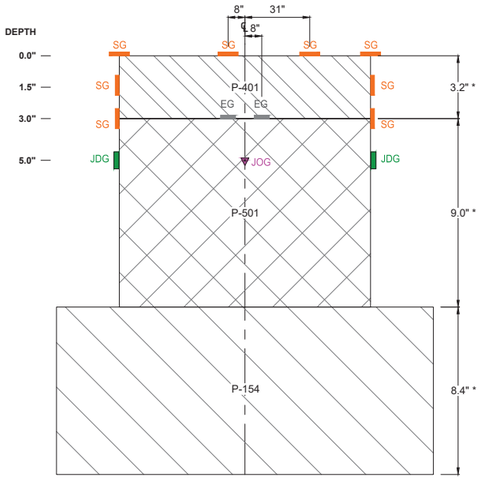

TYPICAL INSTRUMENTATION SECTION VIEW C-C

HORIZONTAL SCALE: 1"=3'
VERTICAL SCALE: 1"=0.3'

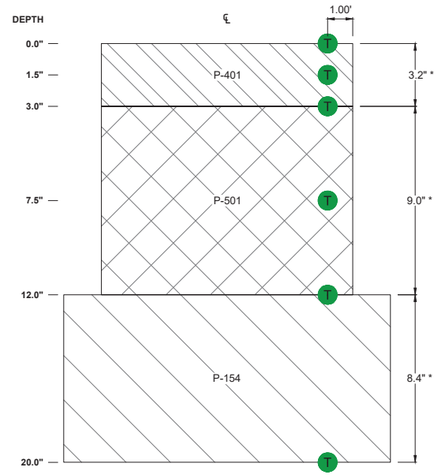

THERMOCOUPLE PLACEMENT SECTION VIEW D-D

HORIZONTAL SCALE: 1"=3'
VERTICAL SCALE: 1"=0.3'

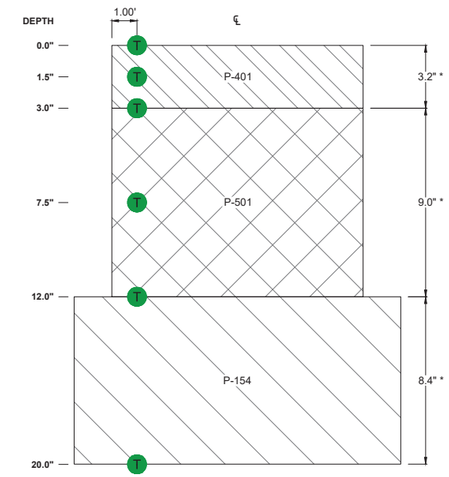

THERMOCOUPLE PLACEMENT SECTION VIEW E-E

HORIZONTAL SCALE: 1"=3'
VERTICAL SCALE: 1"=0.3'

INSTRUMENT KEY AND QUANTITY			
	EG	EMBEDDED DYNATEST STRAIN GAGE	20
	SG	SURFACE STRAIN GAGE	80
	JDG	JOINT DISPLACEMENT GAGE	20
T	T	THERMOCOUPLE	24
	JOG	(WILL'S) JOINT OPENING GAGE	10

LEGEND:

- P-401 PLANT MIX BITUMINOUS PAVEMENT
- P-501 - CONCRETE PAVEMENT (PORTLAND CEMENT CONCRETE)
- P-154 - SUBBASE

*AVERAGE LAYER THICKNESS BASED ON LiDAR DATA.

THERMOCOUPLE

N.T.S.

SURFACE STRAIN GAGE

N.T.S.

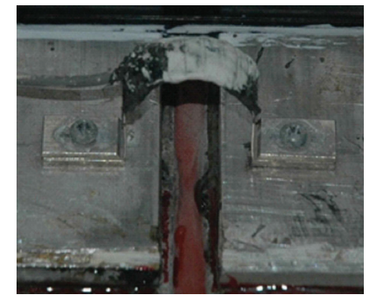

JOINT DISPLACEMENT GAGE

N.T.S.

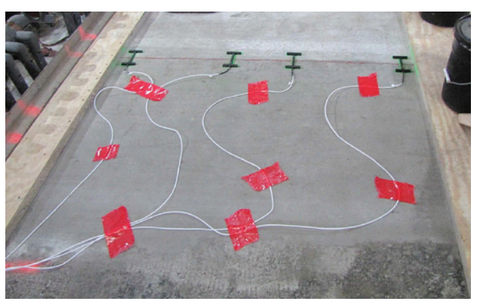

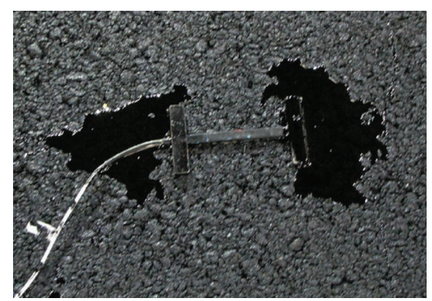

EMBEDDED H-BAR STRAIN GAGES

N.T.S.

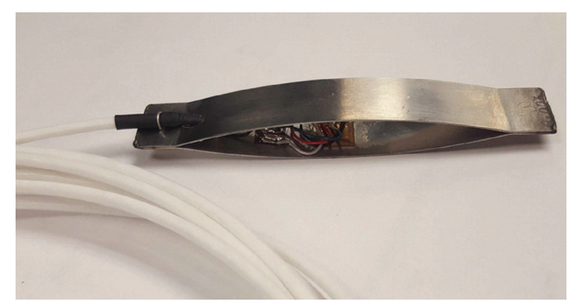

JOINT OPENING GAGE

N.T.S.

NO.	REVISIONS	DATE	BY	CHK	APR

GENERAL DYNAMICS
Information Technology
200 DECADON DRIVE
EGG HARBOR TOWNSHIP
NEW JERSEY 08234
PHONE: (609) 677-8543

FOR

NATIONAL AIRPORT PAVEMENT TEST FACILITY
ATLANTIC CITY AIRPORT
NEW JERSEY 08234

	NAME	DATE
DRAWN	M. MAZUREK	05/31/2019
CHECKED	H.Y. / J.G.	
FAA APPROVAL DATE:		

REFLECTIVE CRACKING OUTDOOR
PHASE I - AS-BUILT
INSTRUMENTATION SECTION VIEWS & PHOTOGRAPHS

PROJECT NO: | SIZE: ANSI D | SCALE: AS NOTED | SHEET 8 OF 17

CAD FILE: REFL-CRACK-OUT1-INST-ABLT.DWG

CARSON INDUSTRIES LLC
SPECIFIC AND PREFERRED WORLDWIDE

Glendora, California
Toll-Free: 800.735.5566
Phone: 909.592.6272
Fax: 909.592.7971

Roscommon, Ireland
Phone: 35.39.03.25922
Fax: 35.39.03.25921

H Series H1730

Heavy Duty

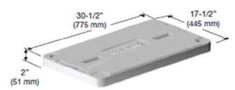

Cover[1]
Material: Polymer Concrete
Weight: 75.0 lbs. (34 kgs)
Model: H1730-P1
Skid Resistant Surface[2]
(Material and cover dimensions compliant with WUC, Guide 3.6[3])

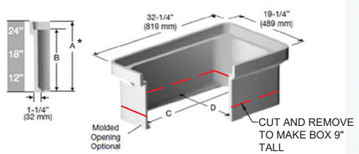

Bodies (12", 18", 24")
Material: Polymer Concrete

Model: H1730-12 (65 lbs./29.4 kgs)
A 12" (305 mm) B 10" (254 mm)
C 28 5/16" (720 mm) D 15 5/16" (390 mm)

Model: H1730-18 (92 lbs./41.7 kgs)
A 18" (457 mm) B 16" (406 mm)
C 28 3/16" (716 mm) D 15 3/16" (386 mm)

Model: H1730-24 (117 lbs./53.0 kgs)
A 24" (610 mm) B 22" (559 mm)
C 28 1/16" (712 mm) D 15 1/16" (382 mm)

Vertical and Lateral Load Rating

Heavy Duty Covers

- Compliant with AASHTO, Design Load of H-10; ASTM C 857-95, Design Load of A-8, 8,000 lbs. Capable of withstanding a Static Load of >22,880 lbf transferred through a 10" x 10" steel plate centered on the cover and body.
- Compliant with AASHTO, Design Load of H-20; ASTM C 857-95, Design Load of A-16, 16,000 lbs. Capable of withstanding a Static Load of >45,760 lbf transferred through a 10" x 20" steel plate centered on the cover and body.
- This product is designed to withstand H-10 and H-20 loading in incidental or non-deliberate traffic areas. Not intended to be installed in roadways.

Shipping Configuration

- **Single Bodies – 12":** Unit, 12 assemblies, = 69.5 cu. ft.; 1,680.0 lbs.
- **Single Bodies – 18":** Unit, 6 assemblies, = 53.8 cu. ft.; 1,002.0 lbs.
- **Single Bodies – 24":** Unit, 6 assemblies, = 69.5 cu. ft.; 1,152.0 lbs.

Standard Test Method	Properties of Raw Material	ASTM Designation	Test Results
Compressive Strength of Polymer Concretes	Compressive Strength	C 579-96	11,000 psi
Flexural Strength and Modulus of Elasticity of Polymer Concretes	Flexural Strength Modulus of Elasticity	C 580-93	1,800 psi 2,900,000 psi
Chemical Resistance of Polymer Concretes	Chemical Resistance	C 267-97	Pass[4]
Determination of Impact Resistance by means of a Tup (falling weight)	Impact Resistance	D 2444-93	Pass[5]

[1]AASHTO H-10, ASTM C 857, A-8, 8,000 lbs Design Load. Static Vertical Load Rating >22,880 lbf.
AASHTO H-20, ASTM C 857 A-16, 16,000 lbs Design Load. Static Vertical Load Rating > 45,760 lbf
[2]Coefficient of Friction (ASTM C1028) >0.5
[3]Western Underground Committee, Guide 3.6
[4]Specimens exposed to ten reagents (alkalis, acids and petroleum distillates) experience <2% weight and dimensional change and retain >75% of average Compressive Strength. Listing of reagents and test reports available upon request.
[5]Capable of withstanding 70 ft lbs impact with a type "C" Tup.

JUNCTION BOX SPECIFICATIONS

N.T.S.

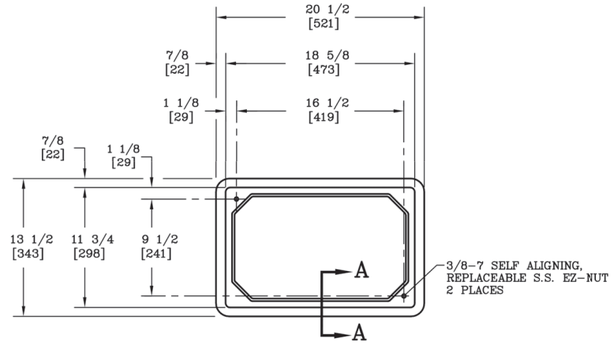

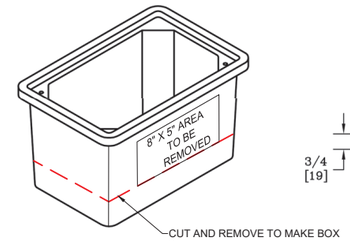

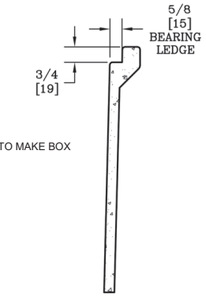

SECTION A–A
SCALE: 3"=1'

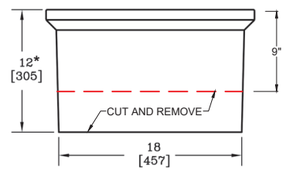

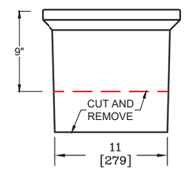

* 3" OF THE BOTTOM WILL BE CUT AND REMOVED TO MAKE A BOX 9" TALL.

NOTES:

1. DIMENSIONS IN BRACKETS ARE IN MILLIMETERS UNLESS OTHERWISE NOTED.
2. GASKETED HEAVY DUTY COVER W/2 BOLTS, HUBBELL PART NUMBER PG1118HG00.
3. OPEN BOTTOM BOX, HUBBELL PART NUMBER PG1118BA12.

HAND HOLE SPECIFICATIONS

N.T.S.

Schedule 40 90° Elbow - Bell End

Part Number	Trade Size	Carton Qty.	"R"	"O"	"H"	"S" MIN	"B" MIN	"L"
5233823	1/2	50	4.000	4.000	4.000	1.500	1.000	6.250
5233824	3/4	35	4.500	4.500	4.500	1.500	1.500	7.125
5233825	1	20	5.750	5.75	5.75	1.875	1.500	9.000
5233826	1-1/4	30	7.250	7.250	7.250	2.000	1.500	11.375
5233827	1-1/2	30	8.250	8.250	8.250	2.000	2.000	13.000
5233828	2	15	9.500	9.500	9.500	2.000	2.000	15.000
5233829	2-1/2	18	10.500	10.500	10.500	3.000	2.250	16.500
5233830	3	14	13.000	13.000	13.000	3.125	2.500	20.375
5233831	3-1/2	12	15.000	15.000	15.000	3.250	3.250	23.500
5233832	4	10	16.000	16.000	16.000	3.375	3.250	25.125
5233835	5	30*	24.000	24.000	24.000	3.625	4.250	37.625
5233834	6	25*	30.000	30.000	30.000	3.750	5.000	47.125

* Pallet Quantity
Dimensions are nominal

Conforms to UL651 and NEMA TC3
Material is Rigid PVC
Bend Tolerance is ±2°

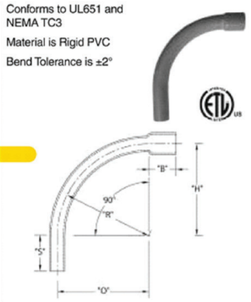

RIGID NONMETALIC SCH. 40 ELBOWS - STANDARD RADIUS

N.T.S.

Meets specifications of UL 651 and NEMA TC2
Rated for 90°C Cable
Sunlight Resistant
10' Lengths

Nonmetallic PVC Schedule 40 Conduit
Belled End - 10' Lengths

Part No.	Size	Feet per Pack	T Min	CD	ID Min	E	B	D Nom	L Min
A52AE12	1/2	6,000	.109	.640	.578	.852	.836	1.500	120
A52AE12H	1/2	3,000	.109	.640	.578	.852	.836	1.500	120
A52AG12	3/4	4,400	.113	1.050	.780	1.064	1.046	1.750	120
A52AG12H	3/4	2,200	.113	1.050	.780	1.064	1.046	1.750	120
A52BA12	1	3,600	.133	1.315	1.004	1.330	1.310	2.000	120
A52BA12H	1	1,800	.133	1.315	1.004	1.330	1.310	2.000	120
A52BC12	1-1/4	3,300	.140	1.660	1.335	1.677	1.655	2.250	120
A52BC12H	1-1/4	1,650	.140	1.660	1.335	1.677	1.655	2.250	120
A52BE12	1-1/2	2,250	.145	1.900	1.564	1.918	1.894	2.500	120
A52BE12H	1-1/2	900	.145	1.900	1.564	1.918	1.894	2.500	120
A52CA12	2	1,400	.154	2.375	2.021	2.393	2.369	3.000	120
A52CE12	2-1/2	930	.203	2.875	2.414	2.890	2.868	3.250	120
A52DA12	3	880	.216	3.500	3.008	3.515	3.492	3.750	120
A52DE12	3-1/2	630	.226	4.000	3.486	4.015	3.992	4.000	120
A52EA12	4	570	.237	4.500	3.961	4.515	4.491	4.500	120
A52FA12	5	380	.258	5.563	4.975	5.593	5.553	5.500	120
A52GA12	6	260	.280	6.625	5.986	6.658	6.614	6.125	120
A52JA12*	8	180	.322	8.625	7.853	8.670	8.610	6.375	120

* Not ETL Listed
Dimensions are nominal

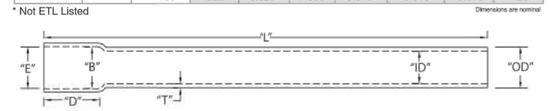

Note: 20' length available on request
Schedule 40 conduit complies with federal and military specifications by conforming to UL 651

CANTEX INC. 301 COMMERCE STE. 2700 FORT WORTH, TEXAS 76102 817-215-7060 FAX: 817-215-7061 www.cantexinc.com CANTEX 97

RIGID NONMETALIC SCHEDULE 40 CONDUIT

N.T.S.

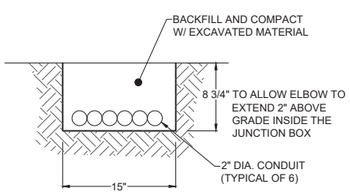

TRENCH DETAIL 1

N.T.S.

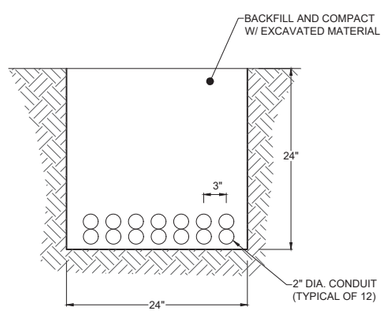

TRENCH DETAIL 2

N.T.S.

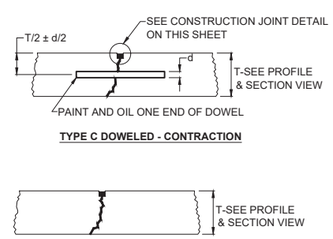

NOTES:

1. BLACK SHADED AREA IS JOINT SEALER.
2. GROOVE MAY BE FORMED OR SAWED.
3. EARLY ENTRY SAW CUTS TO BE CUT MINIMUM OF 1/6" X 1/8" WIDE.
4. FINAL SAW CUT TO BE 1/3" X 1/8" WIDE.

JOINTING FOR RIGID PAVEMENT

N.T.S.

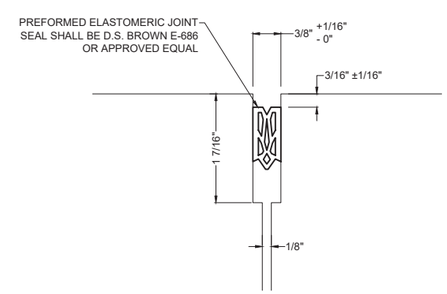

PREFORMED JOINT SEAL TO BE INSTALLED PER MANUFACTURERS RECOMMENDATIONS.

JOINT SEAL DETAIL

N.T.S.

NO.	REVISIONS	DATE	BY	CHK	APR

GENERAL DYNAMICS
Information Technology
200 DECADON DRIVE
EGG HARBOR TOWNSHIP
NEW JERSEY 08234
PHONE: (609) 677-8543

FOR

NATIONAL AIRPORT PAVEMENT TEST FACILITY
ATLANTIC CITY AIRPORT
NEW JERSEY 08234

	NAME	DATE
DRAWN	M. MAZUREK	05/31/2019
CHECKED	J.Z. / J.G.	
FAA APPROVAL DATE:		

REFLECTIVE CRACKING OUTDOOR
PHASE I - AS-BUILT
CONSTRUCTION DETAILS

PROJECT NO: | SIZE: ANSI D | SCALE: AS NOTED | SHEET 9 OF 17

CAD FILE: REFL-CRACK-OUT1-DTLS-ABLT.DWG

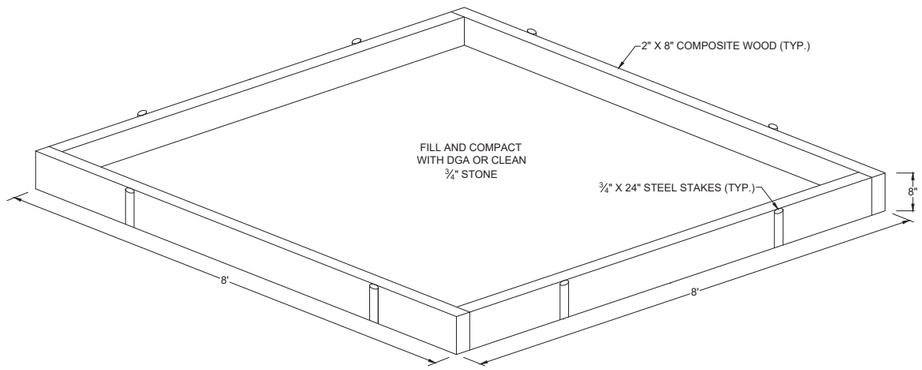

ISOMETRIC VIEW

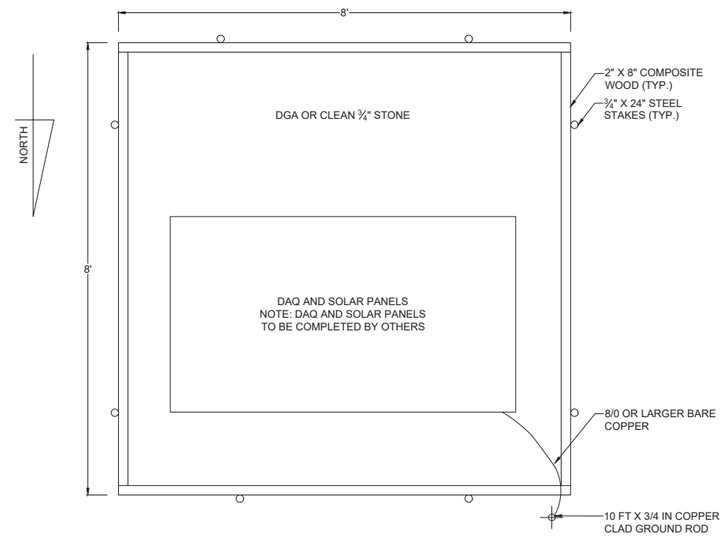

PLAN VIEW

PHOTOGRAPH

STONE PAD DETAIL

N.T.S.

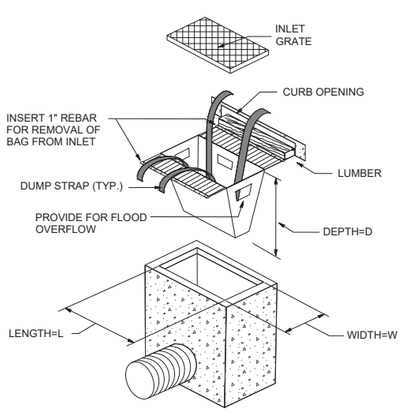

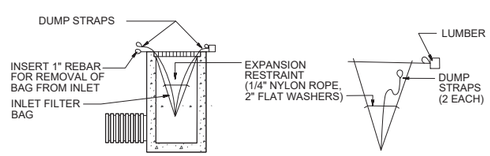

INSTALLATION DETAIL **BAG DETAIL**

INLET FILTER DETAIL

N.T.S.

*OR APPROVED EQUAL

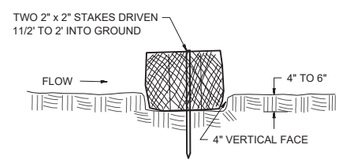

EMBEDDING DETAIL

N.T.S.

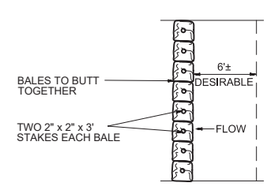

PLAN

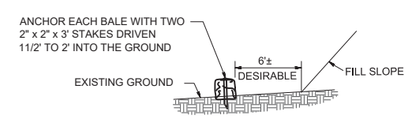

NOTE:
EMBED BALES 4 INCHES TO 6 INCHES AND ANGLE FIRST STAKE TOWARD PREVIOUSLY LAID BALE.

ELEVATION

HAY BALES

N.T.S.

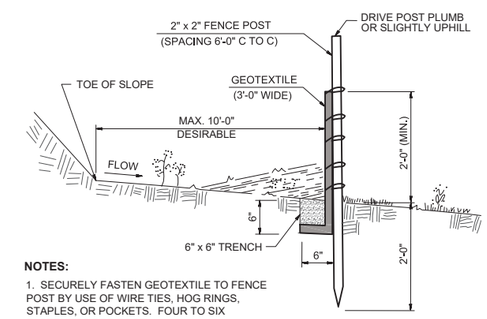

NOTES:

1. SECURELY FASTEN GEOTEXTILE TO FENCE POST BY USE OF WIRE TIES, HOG RINGS, STAPLES, OR POCKETS. FOUR TO SIX FASTENERS PER POST.
2. BURY BOTTOM 1'-0" OF GEOTEXTILE AND TAMP IN PLACE.
3. SECURELY FASTEN ENDS OF INDIVIDUAL ROLLS OF GEOTEXTILE TO A POST BY WRAPPING EACH END OF THE GEOTEXTILE AROUND THE POST TWICE AND ATTACHING AS SPECIFIED IN NOTE 1 ABOVE. DO NOT SPLICE INDIVIDUAL ROLLS AT LOW POINTS.
4. SET SILT FENCE WITHIN PROJECT LIMITS. 10'-0" IS DESIRABLE.

SILT FENCE

N.T.S.

NO.	REVISIONS	DATE	BY	CHK	APR

GENERAL DYNAMICS
Information Technology
200 DECADON DRIVE
EGG HARBOR TOWNSHIP
NEW JERSEY 08234
PHONE: (609) 677-8543

FOR

NATIONAL AIRPORT PAVEMENT TEST FACILITY
ATLANTIC CITY AIRPORT
NEW JERSEY 08234

	NAME	DATE
DRAWN	M. MAZUREK	05/31/2019
CHECKED	J.Z. / J.G.	
FAA APPROVAL DATE:		

REFLECTIVE CRACKING OUTDOOR
PHASE I - AS-BUILT
CONSTRUCTION DETAILS

PROJECT NO: | SIZE: ANSI D | SCALE: AS NOTED | SHEET 10 OF 17

CAD FILE: REFL-CRACK-OUT1-DTLS-ABLT.DWG

PLAN VIEW

SCALE: 1"=3'

TEST RESULTS					
ID	STA.	OFF.	DRY DENSITY	PERCENT COMPACTION	PERCENT MOISTURE
T-01	0+11.0	0.0	120.2	95.6	11.7
T-02	0+18.5	-4.0	116.9	93.0	12.7
T-03	0+32.0	1.0	117.7	83.6	11.4
T-04	0+36.5	-2.0	121.6	96.7	13.0
T-05	0+51.5	2.0	114.7	91.2	5.2
T-06	0+53.5	0.0	112.6	89.6	6.3
T-07	0+67.5	-2.0	119.8	95.3	11.8
T-08	0+73.5	2.0	121.7	96.8	11.5
T-09	0+86.5	-1.0	121.6	96.7	13.1
T-10	0+98.5	0.0	121.5	96.7	10.8
T-11	1+11.0	-2.0	121.3	96.5	9.6
T-12	1+13.5	3.0	122.1	97.1	9.7
T-13	1+30.0	-3.0	121.9	97.0	8.1
T-14	1+39.5	2.0	124.0	98.6	7.3
T-15	1+44.0	-3.0	120.8	96.1	6.5

* TEST PERFORMED ON 6/28/2018
* PROCTOR VALUE OF 125.7 pcf AND 8.9% MOISTURE.

3' 2' 1' 0 3' 6' 9'

GRAPHIC SCALE

1" = 3'

CUT (+) AND FILL (-) SUMMARY TABLE				
ID	COLOR	MIN. [FT]	MAX. [FT]	AREA [SQ. FT]
1		-0.113	-0.042	265.09
2		-0.042	0.042	1925.01
3		0.042	0.956	134.87

LEGEND:

- ⊕ - TEST LOCATION
- x - SPOT ELEVATION
- PR - PROPOSED ELEVATION
- EX - EXISTING ELEVATION
- DIF - DIFFERENCE IN ELEVATION
- GRADE TOLERANCE: ± 0.042'(½")

- CONFORMING ELEVATION
- ELEVATION BELOW THE CONFORMANCE RANGE
- ELEVATION ABOVE THE CONFORMANCE RANGE

NO.	REVISIONS	DATE	BY	CHK	APR

GENERAL DYNAMICS
Information Technology
200 DECADON DRIVE
EGG HARBOR TOWNSHIP
NEW JERSEY 08234
PHONE: (609) 677-8543

FOR

NATIONAL AIRPORT PAVEMENT TEST FACILITY
ATLANTIC CITY AIRPORT
NEW JERSEY 08234

	NAME	DATE
DRAWN	M. MAZUREK	08/10/2018
CHECKED	H.Y. / K.H.	
FAA APPROVAL DATE:		

REFLECTIVE CRACKING OUTDOOR

PHASE I - AS-BUILT SUBGRADE ELEVATION MAP

PROJECT NO: | SIZE: ANSI D | SCALE: 1"=3' | SHEET 11 OF 17

CAD FILE: REFL-CRACK-OUT1-CONF-ABLT.DWG

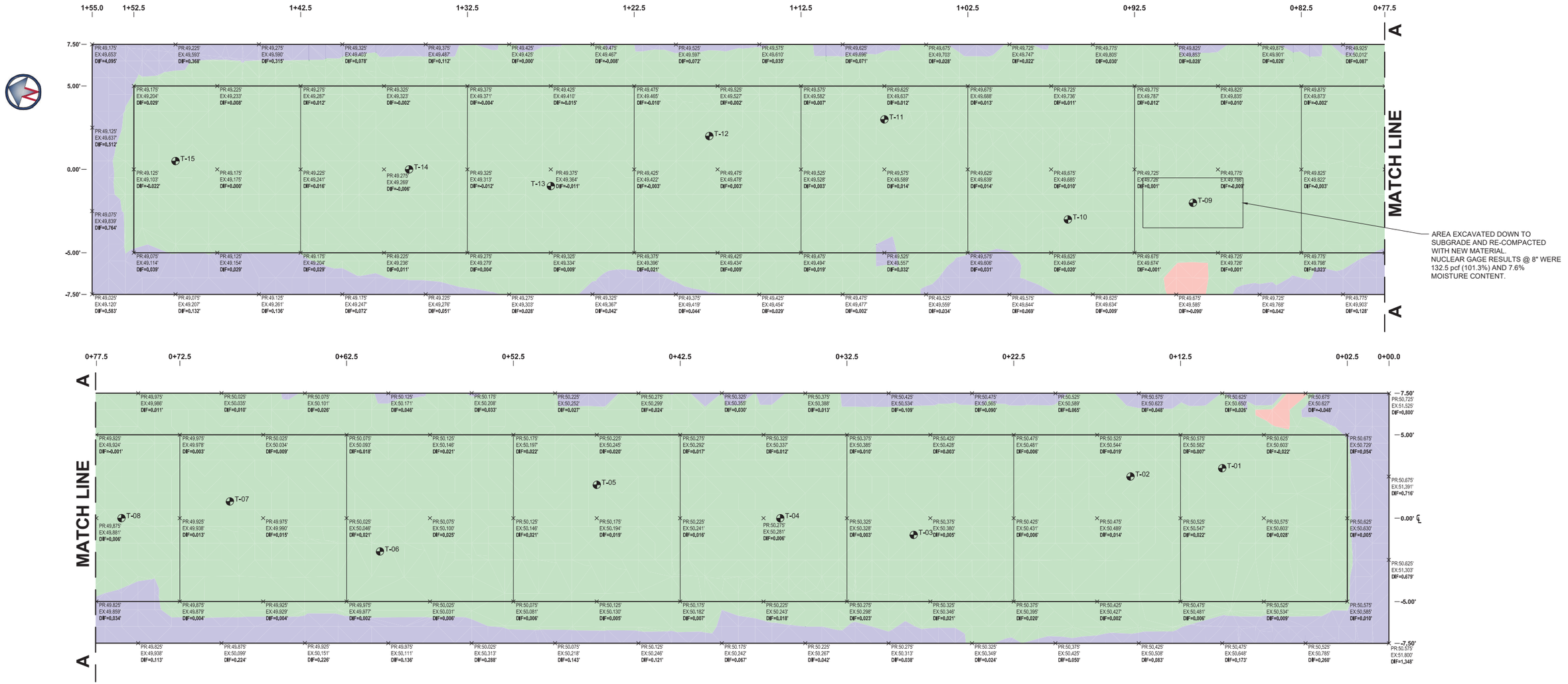

PLAN VIEW

SCALE: 1"=3'

TEST RESULTS					
ID	STA.	OFF.	DRY DENSITY	PERCENT COMPACTION	PERCENT MOISTURE
T-01	0+10.0	+3.0	135.4	103.5	7.3
T-02	0+15.5	+2.5	131.2	100.3	7.8
T-03	0+28.5	-1.0	131.7	100.7	7.8
T-04	0+36.5	0.0	133.0	101.7	8.3
T-05	0+47.5	+2.0	134.9	103.1	7.2
T-06	0+60.5	-2.0	134.3	102.7	6.7
T-07	0+69.5	+1.0	132.9	101.6	6.8
T-08	0+76.0	0.0	135.5	103.6	6.7
T-09	0+89.0	-2.0	133.3	101.9	8.5
T-10	0+96.5	-3.0	135.0	103.2	7.1
T-11	1+07.5	+3.0	132.3	101.1	7.6
T-12	1+18.0	+2.0	134.2	102.6	7.5
T-13	1+27.5	-1.0	131.6	100.6	7.7
T-14	1+36.0	0.0	133.3	101.9	7.2
T-15	1+50.0	+0.5	131.9	100.8	7.3

* TEST PERFORMED ON 7/17/2018
* PROCTOR VALUE OF 130.8 pcf AND 7.2% MOISTURE.

3' 2' 1' 0 3' 6' 9'

GRAPHIC SCALE

1" = 3'

CUT (+) AND FILL (-) SUMMARY TABLE				
ID	COLOR	MIN. [FT]	MAX. [FT]	AREA [SQ. FT]
1		-0.244	-0.031	7.54
2		-0.031	0.031	2029.48
3		0.031	1.495	287.95

LEGEND:

- TEST LOCATION
- x - SPOT ELEVATION
- PR - PROPOSED ELEVATION
- EX - EXISTING ELEVATION
- DIF - DIFFERENCE IN ELEVATION
- GRADE TOLERANCE: ± 0.031' ($\frac{3}{8}$")
- CONFORMING ELEVATION
- ELEVATION BELOW THE CONFORMANCE RANGE
- ELEVATION ABOVE THE CONFORMANCE RANGE

NO.	REVISIONS	DATE	BY	CHK	APR

GENERAL DYNAMICS
Information Technology
200 DECADON DRIVE
EGG HARBOR TOWNSHIP
NEW JERSEY 08234
PHONE: (609) 677-8543

FOR

NATIONAL AIRPORT PAVEMENT TEST FACILITY
ATLANTIC CITY AIRPORT
NEW JERSEY 08234

	NAME	DATE
DRAWN	M. MAZUREK	12/11/2018
CHECKED	H.Y. / K.H.	
FAA APPROVAL DATE:		

REFLECTIVE CRACKING OUTDOOR

PHASE I - AS-BUILT
P-154 ELEVATION MAP

PROJECT NO: | SIZE: ANSI D | SCALE: 1"=3' | SHEET 12 OF 17

CAD FILE: REFL-CRACK-OUT1-CONF-ABLT.DWG

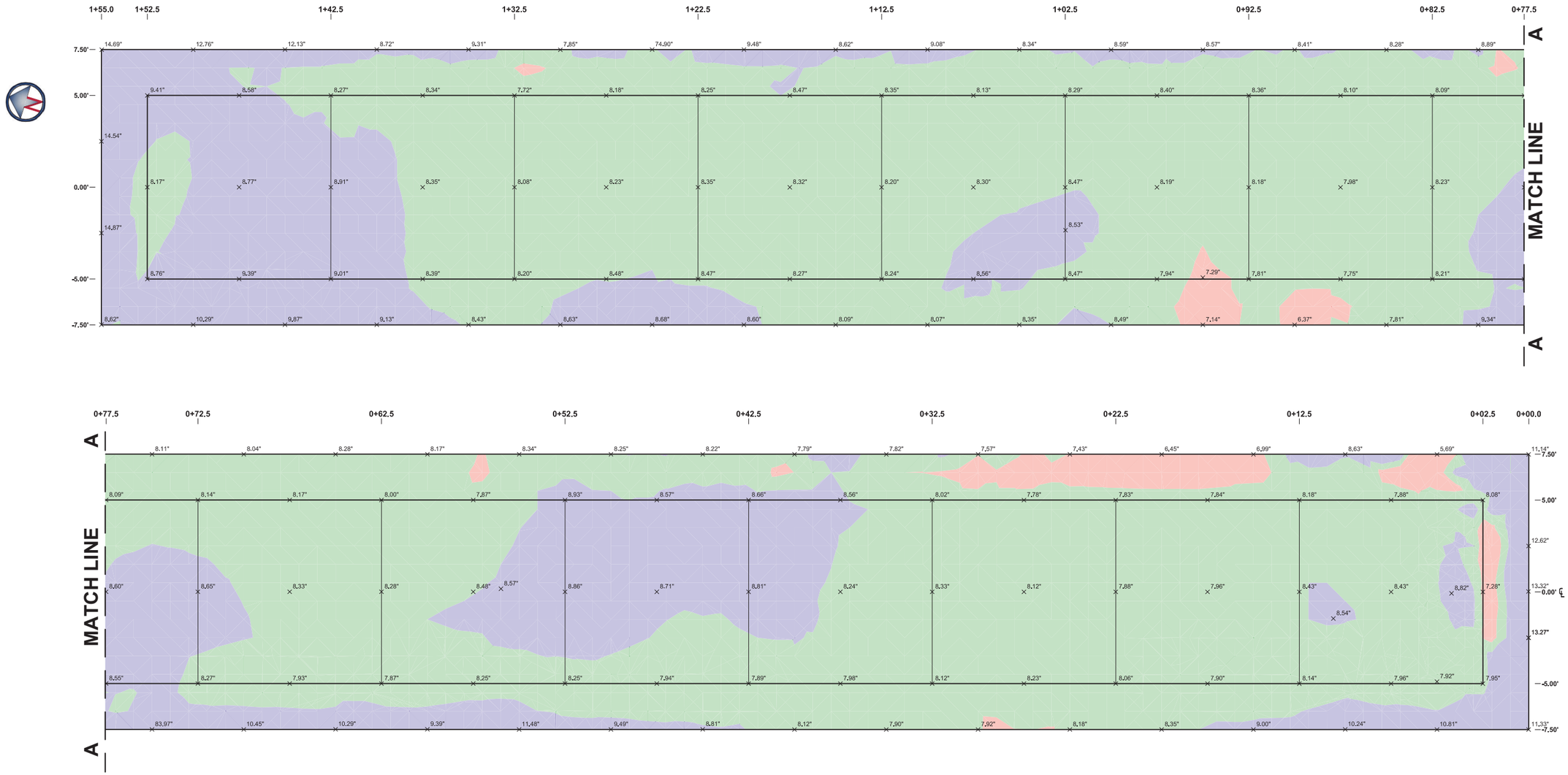

PLAN VIEW

SCALE: 1"=3'

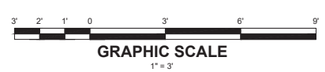

GRAPHIC SCALE

1" = 3'

THICKNESS MAP LEGEND				
ID	MIN. THICKNESS [FT]	MAX. ELEVATION [FT]	AREA [SQ. FT]	COLOR
1	0.388'	0.625'	61.81	
2	0.625'	0.708'	1658.14	
3	0.708'	1.828'	604.99	

LEGEND:

x - THICKNESS LABEL

TARGET THICKNESS: 8"±$\frac{1}{2}$" (0.667±0.042')

THICKNESS TOLERANCE: ± 0.042' ($\frac{1}{2}$")

CONFORMING THICKNESS

THICKNESS BELOW THE CONFORMANCE RANGE

THICKNESS ABOVE THE CONFORMANCE RANGE

NO.	REVISIONS	DATE	BY	CHK	APR

GENERAL DYNAMICS
Information Technology
200 DECADON DRIVE
EGG HARBOR TOWNSHIP
NEW JERSEY 08234
PHONE: (609) 677-8543

FOR

NATIONAL AIRPORT PAVEMENT TEST FACILITY
ATLANTIC CITY AIRPORT
NEW JERSEY 08234

	NAME	DATE
DRAWN	M. MAZUREK	12/11/2018
CHECKED	H.Y. / K.H.	
FAA APPROVAL DATE:		

REFLECTIVE CRACKING OUTDOOR

PHASE I - AS-BUILT
P-154 THICKNESS MAP

PROJECT NO: | SIZE: ANSI D | SCALE: 1"=3' | SHEET 13 OF 17

CAD FILE: REFL-CRACK-OUT1-CONF-ABLT.DWG

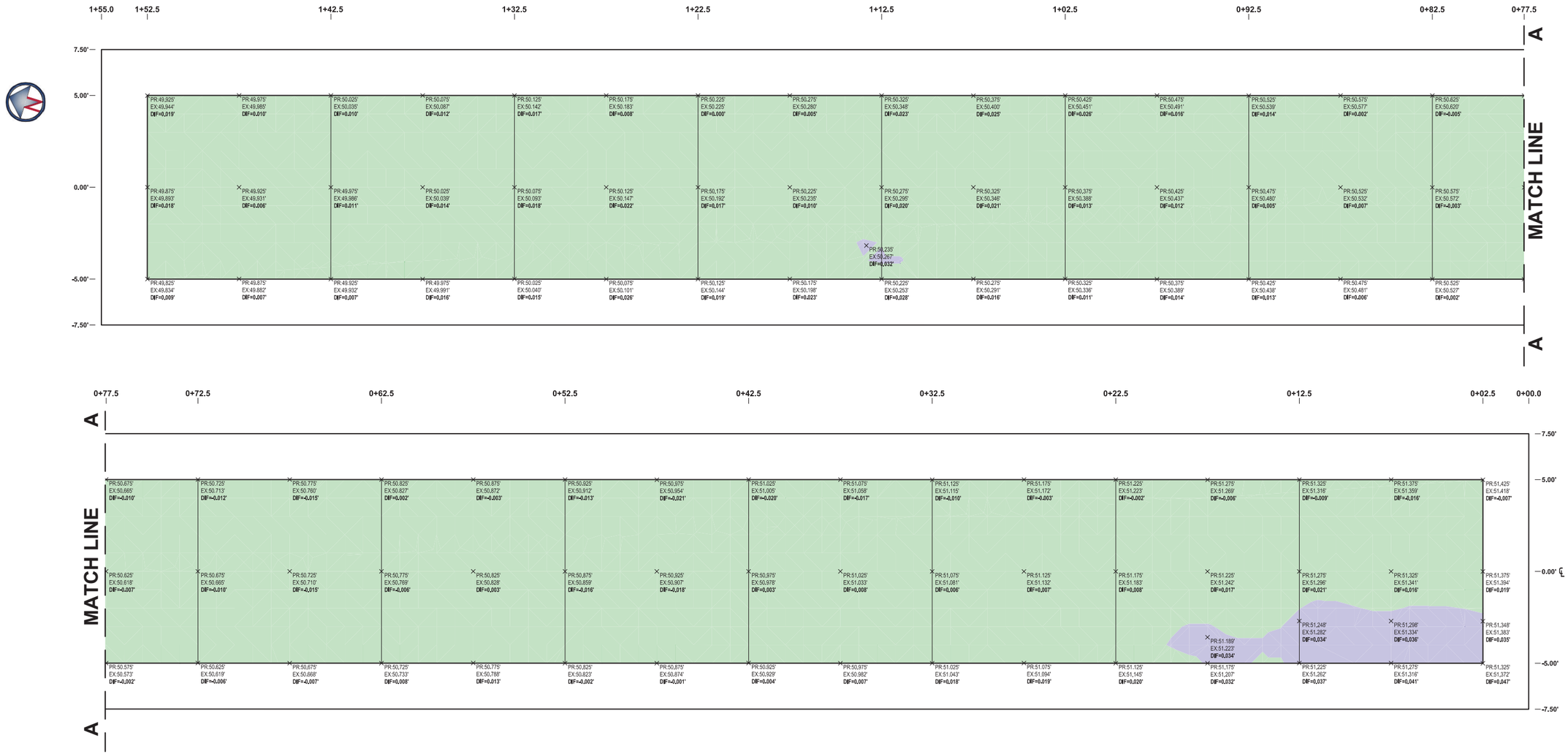

PLAN VIEW

SCALE: 1"=3'

3' 2' 1' 0 3' 6' 9'

GRAPHIC SCALE

1" = 3'

CUT (+) AND FILL (-) SUMMARY TABLE

ID	COLOR	MIN. [FT]	MAX. [FT]	AREA [SQ. FT]
1		-0.027	0.031	1456.41
2		0.031	0.048	43.60

LEGEND:

x - SPOT ELEVATION

PR - PROPOSED ELEVATION

EX - EXISTING ELEVATION

DIF - DIFFERENCE IN ELEVATION

GRADE TOLERANCE: ± 0.031' ($\frac{3}{8}$")

CONFORMING ELEVATION

ELEVATION BELOW THE CONFORMANCE RANGE

ELEVATION ABOVE THE CONFORMANCE RANGE

NO.	REVISIONS	DATE	BY	CHK	APR

GENERAL DYNAMICS
Information Technology
200 DECADON DRIVE
EGG HARBOR TOWNSHIP
NEW JERSEY 08234
PHONE: (609) 677-8543

FOR

NATIONAL AIRPORT PAVEMENT TEST FACILITY
ATLANTIC CITY AIRPORT
NEW JERSEY 08234

	NAME	DATE
DRAWN	M. MAZUREK	04/02/2019
CHECKED	H.Y. / K.H.	
FAA APPROVAL DATE:		

REFLECTIVE CRACKING OUTDOOR

PHASE I - AS-BUILT

P-501 ELEVATION MAP

PROJECT NO: | SIZE: ANSI D | SCALE: 1"=3' | SHEET 14 OF 17

CAD FILE: REFL-CRACK-OUT1-CONF-ABLT.DWG

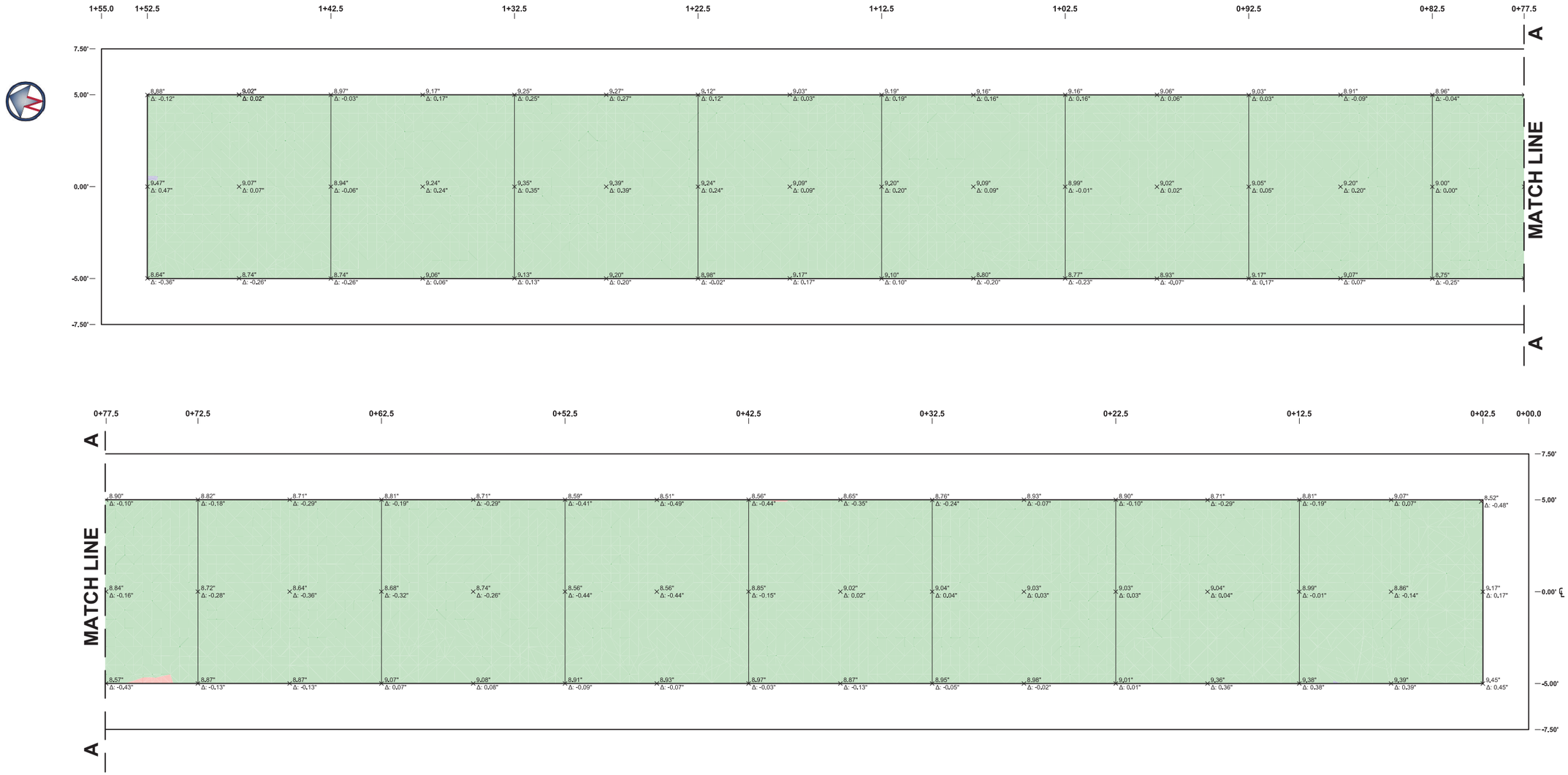

PLAN VIEW

SCALE: 1"=3'

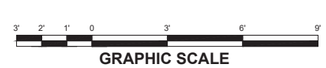

THICKNESS MAP LEGEND

ID	MIN. THICKNESS [FT]	MAX. ELEVATION [FT]	AREA [SQ. FT]	COLOR
1	0.689'	0.708'	0.86	
2	0.708'	0.792'	1498.98	
3	0.792'	0.793'	0.16	

LEGEND:

x - THICKNESS LABEL

TARGET THICKNESS: 9"±$\frac{1}{2}$" (0.750'±0.042')

THICKNESS TOLERANCE: ±$\frac{1}{2}$" (0.042')

CONFORMING THICKNESS 8.50" - 9.50" (0.708'-0.792')

THICKNESS BELOW THE CONFORMANCE RANGE <8.50" (0.708')

THICKNESS ABOVE THE CONFORMANCE RANGE >9.50" (0.792')

NO.	REVISIONS	DATE	BY	CHK	APR

GENERAL DYNAMICS
Information Technology
200 DECADON DRIVE
EGG HARBOR TOWNSHIP
NEW JERSEY 08234
PHONE: (609) 677-8543

FOR

NATIONAL AIRPORT PAVEMENT TEST FACILITY
ATLANTIC CITY AIRPORT
NEW JERSEY 08234

	NAME	DATE
DRAWN	M. MAZUREK	04/02/2019
CHECKED	H.Y. / K.H.	
FAA APPROVAL DATE:		
PROJECT NO:		

REFLECTIVE CRACKING OUTDOOR

PHASE I - AS-BUILT
P-501 THICKNESS MAP

SIZE: ANSI D | SCALE: 1"=3' | SHEET 15 OF 17

CAD FILE: REFL-CRACK-OUT1-CONF-ABLT.DWG

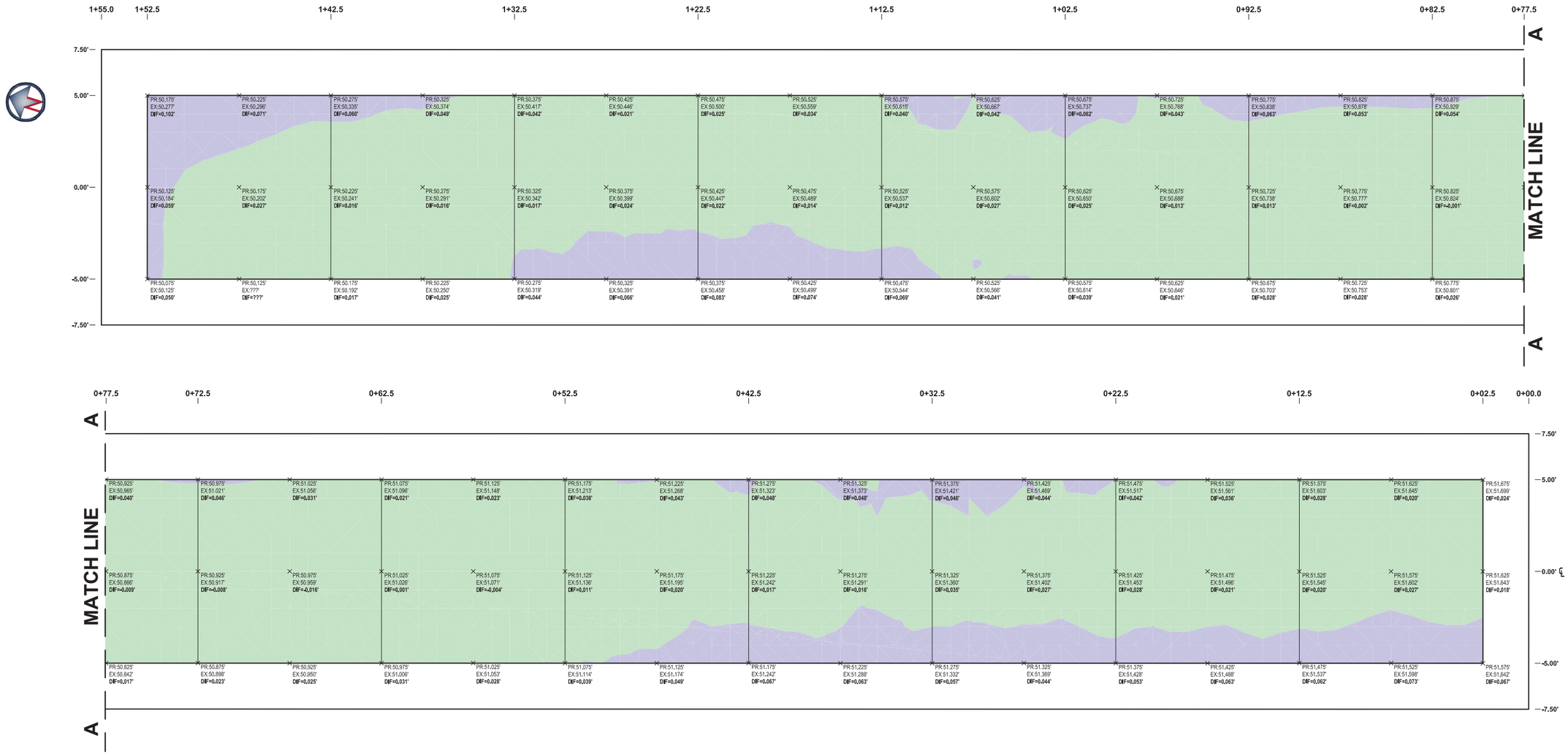

PLAN VIEW

SCALE: 1"=3'

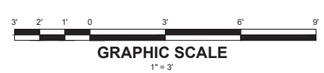

CUT (+) AND FILL (-) SUMMARY TABLE				
ID	COLOR	MIN. [FT]	MAX. [FT]	AREA [SQ. FT]
1		-0.016	0.042	1269.23
2		0.042	0.102	230.78

LEGEND:

x - SPOT ELEVATION

PR - PROPOSED ELEVATION

EX - EXISTING ELEVATION

DIF - DIFFERENCE IN ELEVATION

GRADE TOLERANCE: ± 0.042' (½")

CONFORMING ELEVATION

ELEVATION BELOW THE CONFORMANCE RANGE

ELEVATION ABOVE THE CONFORMANCE RANGE

NO.	REVISIONS	DATE	BY	CHK	APR

GENERAL DYNAMICS
Information Technology
200 DECADON DRIVE
EGG HARBOR TOWNSHIP
NEW JERSEY 08234
PHONE: (609) 677-8543

FOR

NATIONAL AIRPORT PAVEMENT TEST FACILITY
ATLANTIC CITY AIRPORT
NEW JERSEY 08234

	NAME	DATE
DRAWN	M. MAZUREK	05/01/2019
CHECKED	H.Y. / K.H.	
FAA APPROVAL DATE:		

REFLECTIVE CRACKING OUTDOOR

PHASE I - AS-BUILT

P-401 ELEVATION MAP

PROJECT NO: | SIZE: ANSI D | SCALE: 1"=3' | SHEET 16 OF 17

CAD FILE: REFL-CRACK-OUT1-CONF-ABLT.DWG

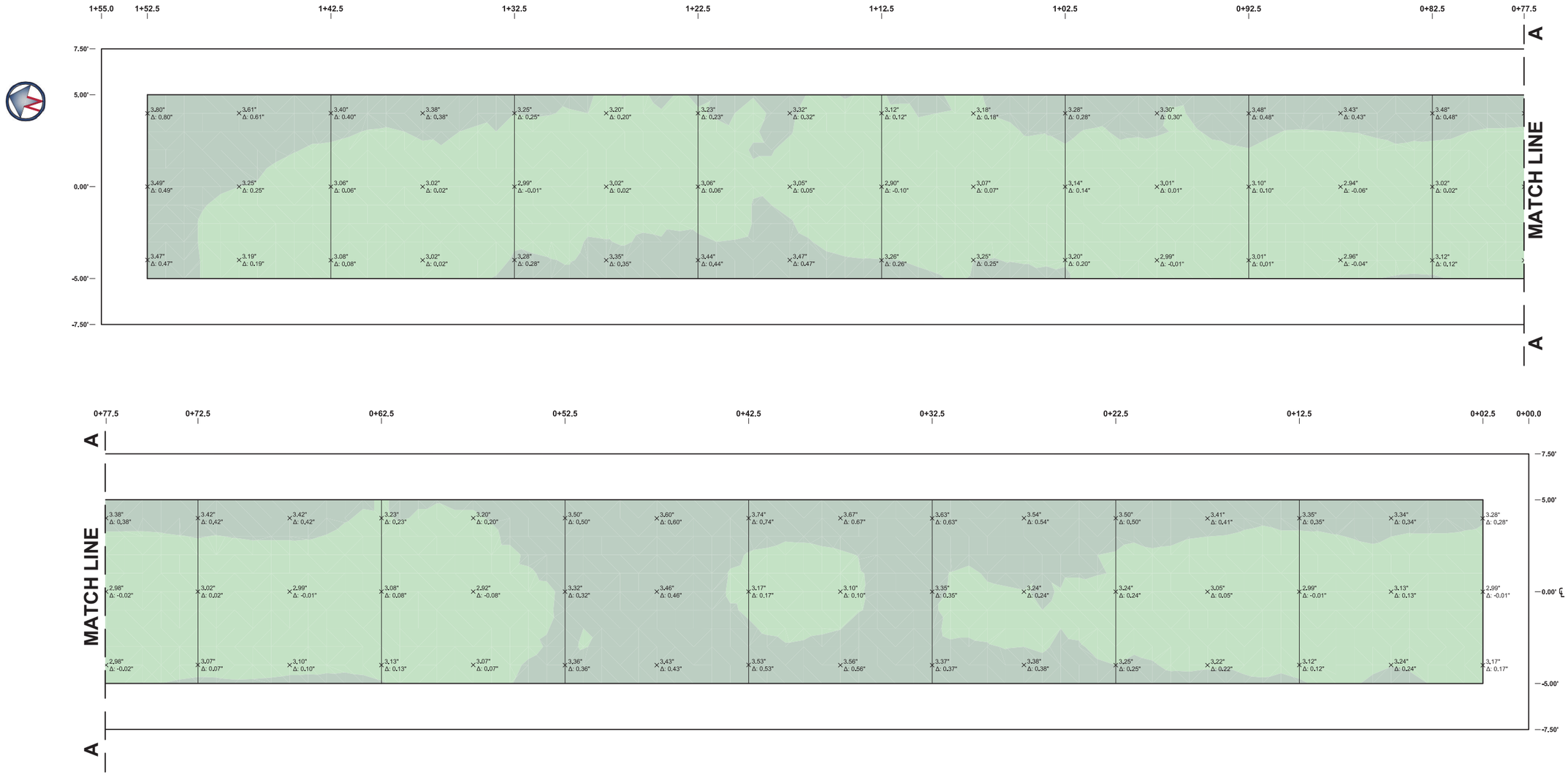

PLAN VIEW

SCALE: 1"=3'

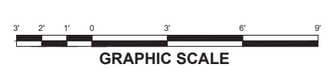

THICKNESS MAP LEGEND				
ID	MIN. THICKNESS [FT]	MAX. ELEVATION [FT]	AREA [SQ. FT]	COLOR
1	0.235'	0.271'	954.47	
2	0.271'	0.336'	545.53	

LEGEND:

x - THICKNESS LABEL

TARGET THICKNESS: 3" (0.250')

THICKNESS TOLERANCE: DEFICIENCY SHALL NOT BE MORE THAN $\frac{1}{4}$" (0.021')

CONFORMING THICKNESS 2.75" - 3.25" (0.229'-0.271')

CONFORMING THICKNESS >3.25" (0.271')

THICKNESS BELOW THE CONFORMANCE RANGE <2.75" (0.229')

NO.	REVISIONS	DATE	BY	CHK	APR

GENERAL DYNAMICS
Information Technology
200 DECADON DRIVE
EGG HARBOR TOWNSHIP
NEW JERSEY 08234
PHONE: (609) 677-8543

FOR

NATIONAL AIRPORT PAVEMENT TEST FACILITY
ATLANTIC CITY AIRPORT
NEW JERSEY 08234

	NAME	DATE
DRAWN	M. MAZUREK	05/01/2019
CHECKED	H.Y. / K.H.	
FAA APPROVAL DATE:		

REFLECTIVE CRACKING OUTDOOR

PHASE I - AS-BUILT
P-401 THICKNESS MAP

PROJECT NO: | SIZE: ANSI D | SCALE: 1"=3' | SHEET 17 OF 17

CAD FILE: REFL-CRACK-OUT1-CONF-ABLT.DWG

APPENDIX C

Material Characterization Plan

Contract No. DTFACT-15-D-00007
Task Order Number 015

National Airport Pavement Testing Facility (NAPTF) Reflective Cracking Support

Reflective Cracking Outdoor Phase I – Material Characterization Plan

August 2018

Composed by:
Gemini Technologies, Inc., for General Dynamics Information Technology

GENERAL DYNAMICS
Information Technology

TABLE OF CONTENTS

	Page
OBJECTIVES	1
INTRODUCTION	1
EXISTING SUBGRADE	1
Material Sampling	1
Acceptance Testing	1
Field Characterization Testing	2
Laboratory Characterization Testing	2
SUBBASE MATERIAL	5
Material Sampling	5
Acceptance Testing	5
Field Characterization Testing	5
Laboratory Characterization Testing	5
PORTLAND CEMENT CONCRETE	5
Acceptance Testing	5
Field Characterization Testing	6
Laboratory Characterization Testing	7
HOT MIX ASPHALT	7
Material Sampling	7
Acceptance Testing	7
Field Characterization Testing	7
Laboratory Characterization Testing	7
TESTING DURATION FOR SAMPLING AND FIELD TESTING	10
REFERENCES	11

APPENDIXES

APPENDIX A.1: Example Submission Forms for Material Characterization Plan

OBJECTIVES

- ✓ Develop the failure models for both aircraft and temperature loads
- ✓ Develop a more realistic finite element model (FEM) to address both aircraft and temperature loads
- ✓ Isolate and compare load and temperature effects, including dummy and dowel joint comparison, on reflective cracking with: 1) Temperature load only and 2) Aircraft and Temperature loads
- ✓ Validate and calibrate the crack propagation model derived from the indoor reflective cracking rig test
- ✓ Implement findings in the overlay design procedures for all future versions of FAARFIELD

INTRODUCTION

- ✓ **Existing Subgrade:** After demolition/excavation, samples should be collected from the existing subgrade (throughout the excavated area) per ASTM D75. Modified Proctor (per ASTM D1557) and Gradation Analysis (per ASTM C136/C117) shall be done on the above collected samples to give the material moisture-density relationships, which will be used in determining the required compaction for the existing subgrade.
- ✓ **Subbase Material:** During construction of the subbase layer, samples should be collected from the subbase layer (throughout the layer) per ASTM D75. Modified Proctor (per ASTM D1557) and Gradation Analysis (per ASTM C136/C117) shall be conducted. Gradation tests are required to conform P-154MR specifications. Modified proctor tests provide the moisture-density relationships which will be used to determine the required compaction.
- ✓ **Portland Cement Concrete (PCC) Material:** Flexural strength tests (per ASTM C78) shall be conducted to determine the flexural strength of the P-501MR.
- ✓ **Hot Mix Asphalt (HMA) Material:** Job mix formula (JMF) shall be verified to conform P-401MR specifications.

EXISTING SUBGRADE

MATERIAL SAMPLING

- ✓ At least seven 5-gallon buckets shall be collected from the existing subgrade (throughout the excavated area) per ASTM D75 for the material characterization tests in the laboratory. Sampling will be limited to the top 12 inches.

ACCEPTANCE TESTING

- ✓ Based on the expected subgrade material type (USCS classification: SM) from the past testing at the National Airport Pavement and Materials Research Center (NAPMRC), the

density should be measured using the **Nuclear Density Gage** Method (per ASTM D6938) at a frequency of one test per 10x10-ft area. The dry density shall not be less than 100% of the maximum dry density at target moisture content for the subgrade layer.

FIELD CHARACTERIZATION TESTING

- ✓ Light Weight Deflectometer (**LWD**) per ASTM E2583 and Portable Seismic Pavement Analyzer (**D-PSPA)** tests shall be performed at the top of the subgrade. Dynamic Cone Penetration (**DCP**) shall be performed at the top of the subbase per ASTM D6951 to characterize the subgrade but allow the subbase to provide confinement. Figures 1 and 2 show the testing locations (marked in red).

LABORATORY CHARACTERIZATION TESTING

- ✓ Specimens for resilient modulus tests (followed by a quick shear test) shall be compacted to match the in-situ field conditions. Table 1 shows the testing plan for the subgrade material.

Table 1. Laboratory Test Plan for Subgrade Material

Test	Standard	Replicates	Comments
Modified Proctor#	ASTM D1557	1	To get optimum moisture content for construction
Gradation	ASTM C136	1	Characterize native soil
Specific Gravity	ASTM D854	1	Characterize native soil
Atterberg Limits	ASTM D4318	1	Characterize native soil
Hydrometer	ASTM D422	1	Characterize native soil
Uncompacted Void Content	ASTM C1252	1	Characterize native soil
Resilient Modulus and Quick Shear	AASHTO T307	3*	Determine resilient modulus and strength parameters

*# Five different moisture contents; *Three replicate Quick shear tests to be performed at three different confining pressures*

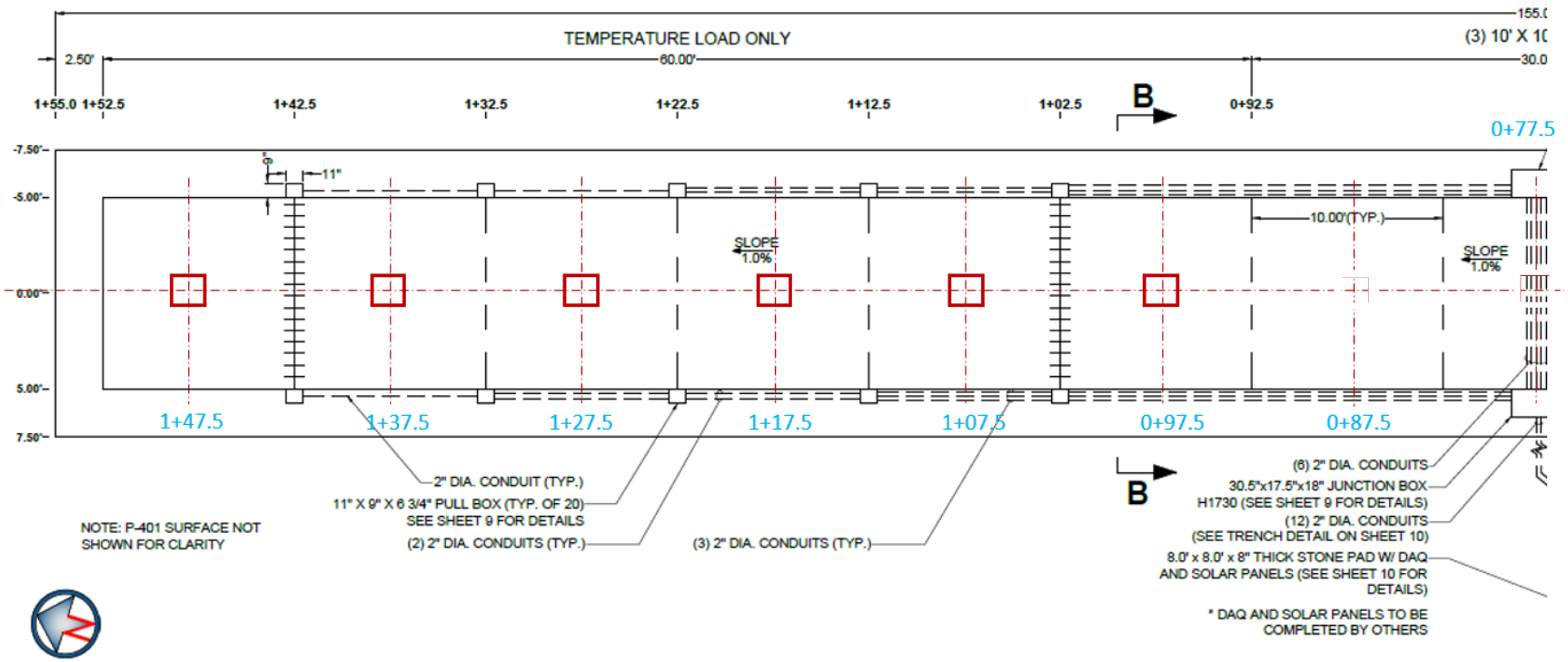

Figure 1. Sampling and Testing Locations for Temperature Load Only (TO) Section

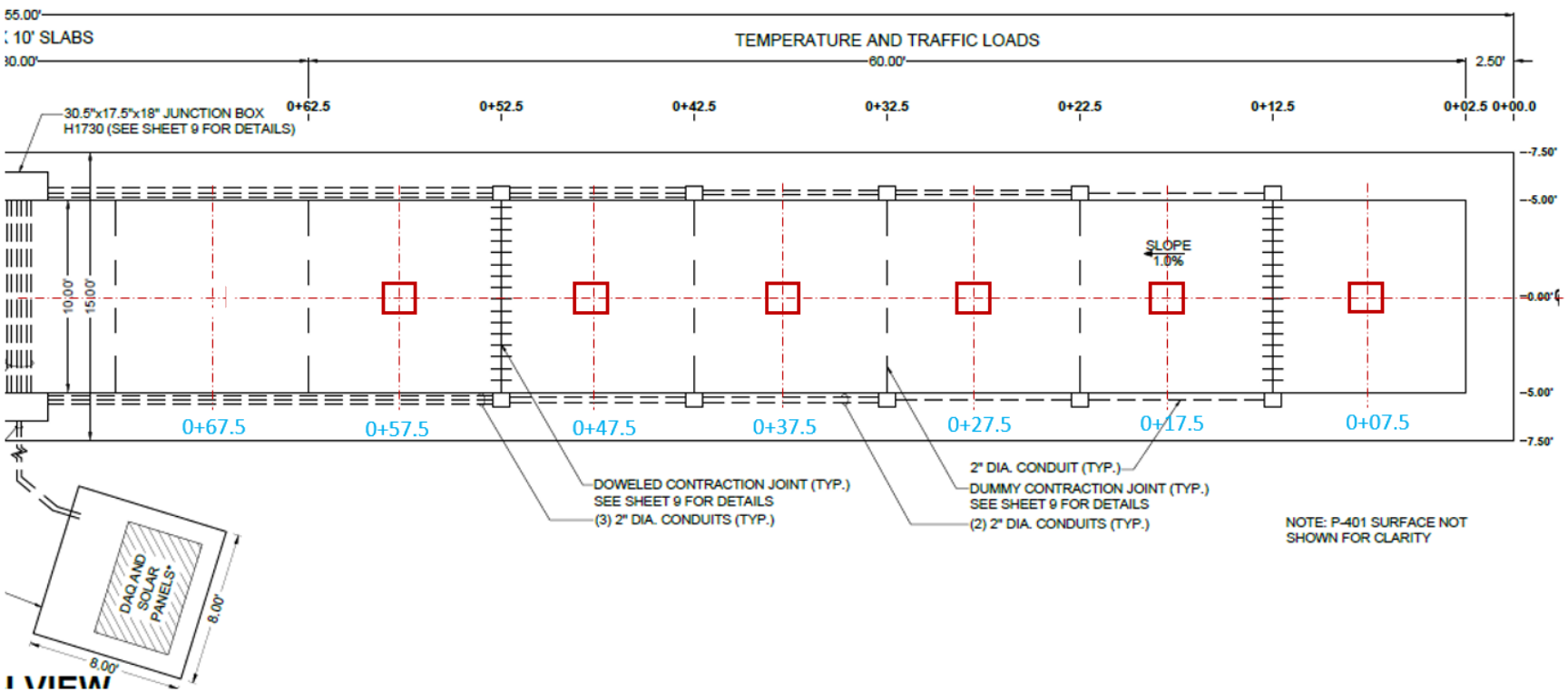

Figure 2. Sampling and Testing Locations for Temperature and Traffic Loads (TT) Sections

SUBBASE MATERIAL

MATERIAL SAMPLING

- ✓ At least six 5-gallon buckets shall be collected from the subbase layer (throughout the subbase area) per ASTM D75 for further investigation in the laboratory. Note that the materials should be sampled and collected prior to any compaction.

ACCEPTANCE TESTING

- ✓ **Nuclear Density Gage** method (per ASTM D6938) shall be done at randomly generated locations within each test section. The dry density shall be at least 100% of the maximum dry density at target moisture content for the subbase layer.

FIELD CHARACTERIZATION TESTING

- ✓ **LWD** and **D-PSPA** tests shall be performed at the top of the subbase per ASTM E2583 for LWD. Figures 1 and 2 show the testing locations (marked in red color).

LABORATORY CHARACTERIZATION TESTING

- ✓ Specimens for resilient modulus tests (followed by a quick shear test) shall be compacted to match the in-situ field conditions. Table 2 shows the testing plan for the subbase material.

Table 2. Laboratory Test Plan for Subbase Material

Test	Standard	Replicates	Comments
Modified Proctor#	ASTM D1557	1	To get optimum moisture content for construction
Gradation	ASTM C136	1	Characterize subbase soil
Atterberg Limits	ASTM D4318	1	Characterize subbase soil
Resilient Modulus and Quick Shear	AASHTO T307	3*	Determine resilient modulus and strength parameters

*# Five different moisture contents; *Three replicate Quick shear tests to be performed at three different confining pressures*

PORTLAND CEMENT CONCRETE

ACCEPTANCE TESTING

- ✓ **Slump** (per ASTM C143), **Air Content** (per ASTM C173), **Unit Weight** (per ASTM C138), and **Concrete Temperature** (per ASTM C1064) tests shall be conducted per sublot to conform P-501MR specifications. A total of 8 flexural strength (per ASTM C78) tests shall be conducted.

FIELD CHARACTERIZATION TESTING

- ✓ **PSPA** shall be conducted at the locations as shown in Figures 1 and 2 (marked in red color) on 28 days and Heavy Weight Deflectometer (**HWD)** (per ASTM D4694) should be conducted at the same time. Testing locations for HWD is shown in Figure 3. Slab center HWD testing (Figure 3) is required to backcalculate concrete modulus, whereas, joint HWD testing (sensor position shown in Figure 4) will be performed to obtain Load Transfer Efficiency (LTE) at the joints.

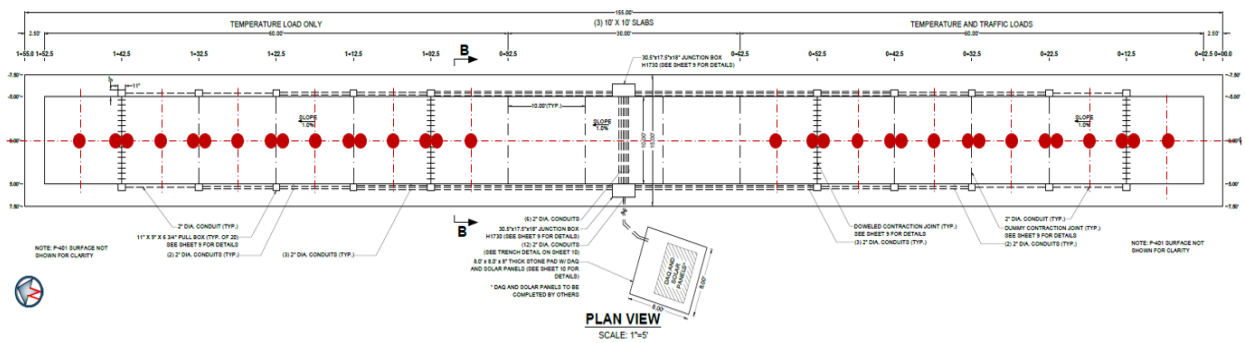

Figure 3. HWD Testing Locations

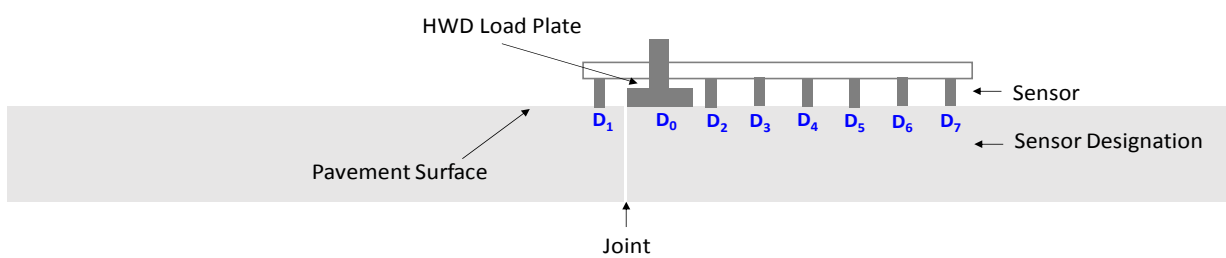

(a)

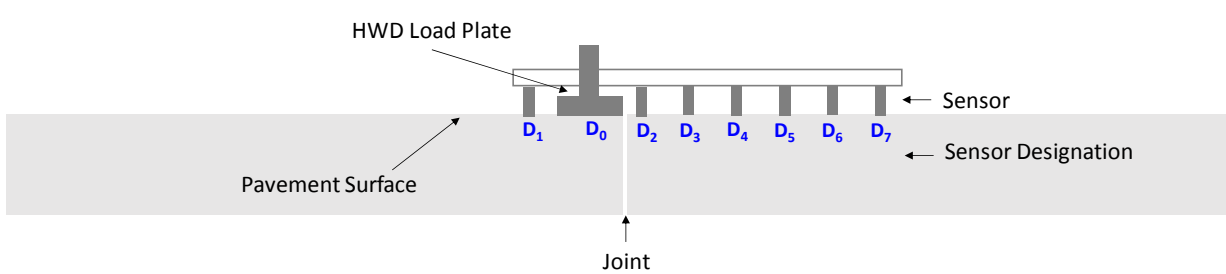

(b)

Figure 4. HWD Sensor Location

LABORATORY CHARACTERIZATION TESTING

- ✓ The test plan for PCC material is shown in Table 3. All the specimens should be cured in the laboratory.

Table 3. Laboratory Test Plan for PCC Material

Test	Standard	Curing Time	Replicates /Truck	Type of Sample	Comments
Free-Free Resonant Frequencies and Compressive Strength*	ASTM C215 and ASTM C39	28 days	1	Cylinder	Determine compressive strength for research purpose
Flexural Strength	ASTM C78	28 days	2**	Beam	Determine flexural strength
Elastic Modulus	ASTM C469	28 days	1	Cylinder	For research purpose
Coefficient of Thermal Expansion	AASHTO T336	28 days	1#	Cylinder	For research purpose

**Free-Free Resonant Frequency should be conducted on the same specimen before conducting compressive strength;*
*** Total of 8 replicates required per P-501MR; # Total of 6 cylindrical specimens*

HOT MIX ASPHALT

MATERIAL SAMPLING

- ✓ Loose mix (at least seven 5-gallon buckets) shall be collected to verify JMF in NextGen Pavement Materials Laboratory. Collected loose mix will also be used for HMA characterization tests.

ACCEPTANCE TESTING

- ✓ **Theoretical Maximum Specific Gravity** (per ASTM D2041), **Bulk Specific Gravity** (per ASTM D2726), **Asphalt Content** (per ASTM D6307), and **Gradation** (per ASTM D5444) should be verified in NextGen Pavement Materials Laboratory.

FIELD CHARACTERIZATION TESTING

- ✓ **PSPA** shall be conducted at same location as for PCC material, as shown in Figures 1 and 2 (marked in red color, except the middle 3 slabs [marked in red in Figure 5]).

LABORATORY CHARACTERIZATION TESTING

- ✓ HMA specimens will be compacted using collected loose mix in NextGen Pavement Materials Laboratory to evaluate the effect of compaction effort and advanced performance tests. Table 4 shows the proposed testing plan. The Customized Overlay Tester performed at different compaction efforts was specifically requested to expand on the analysis from previous reflective cracking efforts. From Reflective Cracking Phase I study, it was found that the temperatures in the surface layer (HMA) vary significantly as

compared to the underlying layers (PCC and subgrade). Hence, the temperature at the top of the PCC layer was assumed to approximate the uniform temperature within the concrete slab. A complete summary of mean daily lowest temperatures and maximum daily temperature drops from selected airports was provided in Phase I Comprehensive Test Report. The lowest pavement temperatures reached during the overlay life were selected for simulations in an effort to focus on a critical condition analysis. In certain cases, additional critical conditions were identified where the highest cooling rates occurred (in combination with very low temperatures, but perhaps not the coldest absolute temperature reached). It was therefore decided that the lowest temperature (32 °F) and the most severe temperature drop (17 °F) at the HMA-PCC interface would be used to study reflective cracking at NAPTF. The joint opening of 12 mils corresponded to this large temperature drop at the overlay bottom in the field. It is highly recommended to monitor the temperature profile for the outdoor reflective cracking pavement prior to starting the customized overlay test in the laboratory. By measuring the temperature profile, the testing temperature for the customized overlay tester should be verified/changed as needed.

Table 4. Laboratory Test Plan for HMA Material (Loose Mix)

Test	Standards	Compaction Effort (N_{design})	Replicates	Comments
Theoretical Maximum Specific Gravity	ASTM D2041		1	Acceptance Testing
Bulk Specific Gravity	ASTM D2726		1	Acceptance Testing
Asphalt Content	ASTM D6307		1	Acceptance Testing
Gradation	ASTM D5444		1	Acceptance Testing
Dynamic Modulus	AASHTO TP79		3	Determine Modulus for the HMA
Customized Overlay Tester	Yin and Mandal (2017)	50	4	Evaluate the effect of compaction effort
		75	4	
		100	4	
		125	4	

- ✓ 6” Cores (Inner diameter of core bit = 6”) will be extracted from the transition area, as shown in Figure 5 (marked in red). A total of 35 cores will be extracted. Table 5 shows the proposed laboratory tests on HMA cores.

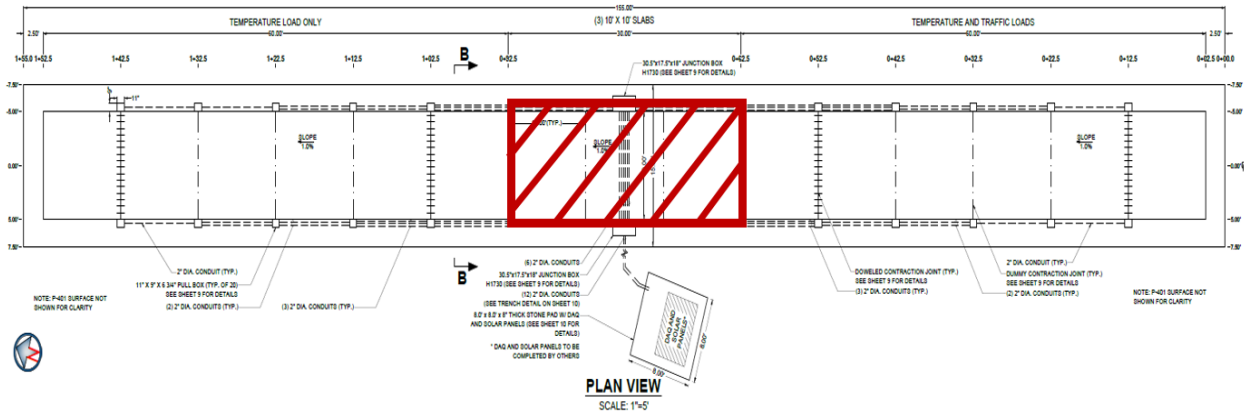

Figure 5. Core Locations for HMA Testing

Table 5. Laboratory Test Plan for HMA Cores

Test	Standards	Replicates	Comments
DCT Test	ASTM D7313	3	Determine Tensile Strength
Tensile Strength Ratio	ASTM D4867	3	Evaluate Effect of Moisture
Texas Overlay	Tex-248-F	3	Cracking resistance
Customized Overlay Tester*	Yin and Mandal (2017)	5	Compare to TO26 Sections

**Control Specimens (12mils, 0□ test temperature, 150s rest period)*

- ✓ In the Tex-248-F test method, the specimen is subjected to tensile stresses using a triangular waveform up to a constant maximum displacement of 25 mils, whereas, in the Hao and Mandal 2017 test method, a haversine waveform is used up to a constant maximum displacement of 12 mils. Further, in the Tex-248-F test method, a continuous loading (no rest period) is given to the specimen with a 10-s loading/unloading time for each cycle. In the Hao and Mandal 2017 method, the loading/unloading time of 150 s is given followed by a rest period of 150 s for each cycle. Moreover, per the Tex-248-F standard, the tests are run until a 93% reduction of the maximum load (from the first loading cycle). If the 93% reduction is not reached within 1000 cycles, the testing is stopped. In the case of Hao and Mandal 2017 test method, the test is run for 5000 cycles and a 98% load reduction. However, the test can be stopped if the crack is clearly visible on top of the specimen. In order to monitor the crack growth, three strain gages are glued to the surface (bottom, middle and top), including a thin coat of white paint on the sides and top of the specimen. Lastly, as the test for Tex-248-F test method is conducted at a constant temperature of 77 ± 1 °F, the standard requires a minimum of only 10 min for conditioning. In the case of Hao and Mandal 2017 test method, this conditioning time was increased to a minimum of 2 h as the testing temperature was lower (32 °F). The 2-h time was based on the measurements using a temperature probe inside a dummy specimen.

TESTING DURATION FOR SAMPLING AND FIELD TESTING

In summary, sampling, field testing, and data analysis will take about 24 days. Total number of hours (approximate) required for this effort:

- Technician: 97 hours
- Engineer: 56 hours

The detailed breakdown is provided in Tables 6 – 9 below.

Table 6. Duration for Sampling, Field Testing, and Data Analysis (Existing Subgrade)

Test	Number of tests	Time required to initiate and complete the test by the trained technicians	Total time required (days)
Sampling for Material Characterization	7 buckets	4 h	5
DCP[×]	15	3 h	
LWD[×]	15	3 h	
D-PSPA	15	5 h	
Data Analysis and Verification by an Engineer		2 d	

 # Assuming 1 location per 10x15-ft area; [×] Two technicians required

Table 7. Duration for Sampling, Field Testing, and Data Analysis (Subbase)

Test	Number of tests	Time required to initiate and complete the test by the trained technicians	Total time required (days)
Sampling for Material Characterization	6 buckets	4 h	**4**
LWD[×]	15	3 h	
D-PSPA	15	5 h	
Data Analysis and Verification by an Engineer		2 d	

 # Assuming 1 location per 10x15-ft area and measuring in 1 lift; [×] Two technicians required

Table 8. Duration for Sampling, Field Testing, and Data Analysis (PCC)

Test	Number of tests	Time required to initiate and complete the test by the trained technicians	Total time required (days)
Sampling for Material Characterization*	See Table 3	1 d	**4**
PSPA	15	5 h	
HWD	32	4 h	
Data Analysis and Verification by an Engineer		2 d	

**Assuming two technicians required*

Table 9. Duration for Sampling, Field Testing, and Data Analysis (HMA)

Test	Number of tests	Time required to initiate and complete the test by the trained technicians	Total time required (days)
Sampling for Material Characterization	7 buckets	1 d	**7**
Theoretical Maximum Specific Gravity, Bulk Specific Gravity, Asphalt Content, and Gradation	1	3 d	
PSPA	12	4 h	
Coring	35 cores	8 h	
Data Analysis and Verification by an Engineer		1 d	

REFERENCES

Yin, H. and Mandal, T. (2017). “Reflective Cracking Phase IV Comprehensive Report b – Material Characterization,” Deliverable 4.10.5.4, Delivery Order 015: Reflective Cracking Support, August.

APPENDIX A.1: EXAMPLE SUBMISSION FORMS FOR MATERIAL CHARACTERIZATION PLAN

AASHTO T307 Resilient Modulus of Soils and Aggregate Material

NextGen Pavement Materials Laboratory
William J. Hughes Technical Center
Atlantic City Int. Airport, NJ 08405

Resilient Modulus Test for Granular Materials
AASHTO T 307
Soil Type 1

Project: Section: Date:
Technician: Sample ID: Source:
Aggregate Type: Vol. of Mold (ft^3) 0.0082

Moisture Density Information

Target Dry Density: Target Water: Target Wet Density:
Weight Dry Soil: Weight Water Added: Wet Weight/Lift:
Total Weight of Wet Soil in Mold: Final Height:

Before Compaction

Pan No.
Pan Wgt:
Wet Soil + Pan Wgt:
Dry Soil + Pan Wgt:
Water Loss:
Dry Soil Wgt:
Percent Water:
Wet Density:
Dry Density:

After Test

Table 2 Testing Sequence:

Sequence No.	Confining Pressure (psi)	Constant Force (lbf)	Cyclic Force (lbf)	Maximum Force (lbf)	Start Displacement (inches)	End Displacement (inches)
0	15	42	382	424		
1	3	9	77	85		
2	3	17	153	170		
3	3	25	229	254		
4	5	14	127	141		
5	5	28	255	283		
6	5	42	382	424		
7	10	28	255	283		
8	10	67	609	676		
9	10	85	763	848		
10	15	28	255	283		
11	15	42	382	424		
12	15	85	763	848		
13	20	42	382	424		
14	20	67	609	676		
15	20	113	1018	1131		

AASHTO T336 Coefficient of Thermal Expansion of Hydraulic Cement Concrete

Coefficient of Thermal Expansion of Hydraulic Cement Concrete AASHTO T336

National Airport Pavement Test Facility William J. Hughes Technical Center
Atlantic City International Airport
New Jersey 08405

Project: _____ **Date:** _____
Specimen ID: _____ **Material Description:** _____
Technician: _____ **Prof. Engineer:** _____

Length of the Specimen at Room Temperature	
Low Temperature_T1	
High Temperature_T2	
Low Temperature_T3	
LVDT at T1	
LVDT at T2	
LVDT at T3	
CTE1	
CTE2	
CTE3	
Corrected Factor	
Average Corrected CTE	

Created: 2/5/2014

AASHTO TP79 Dynamic Modulus and Flow Number for Asphalt Mixtures

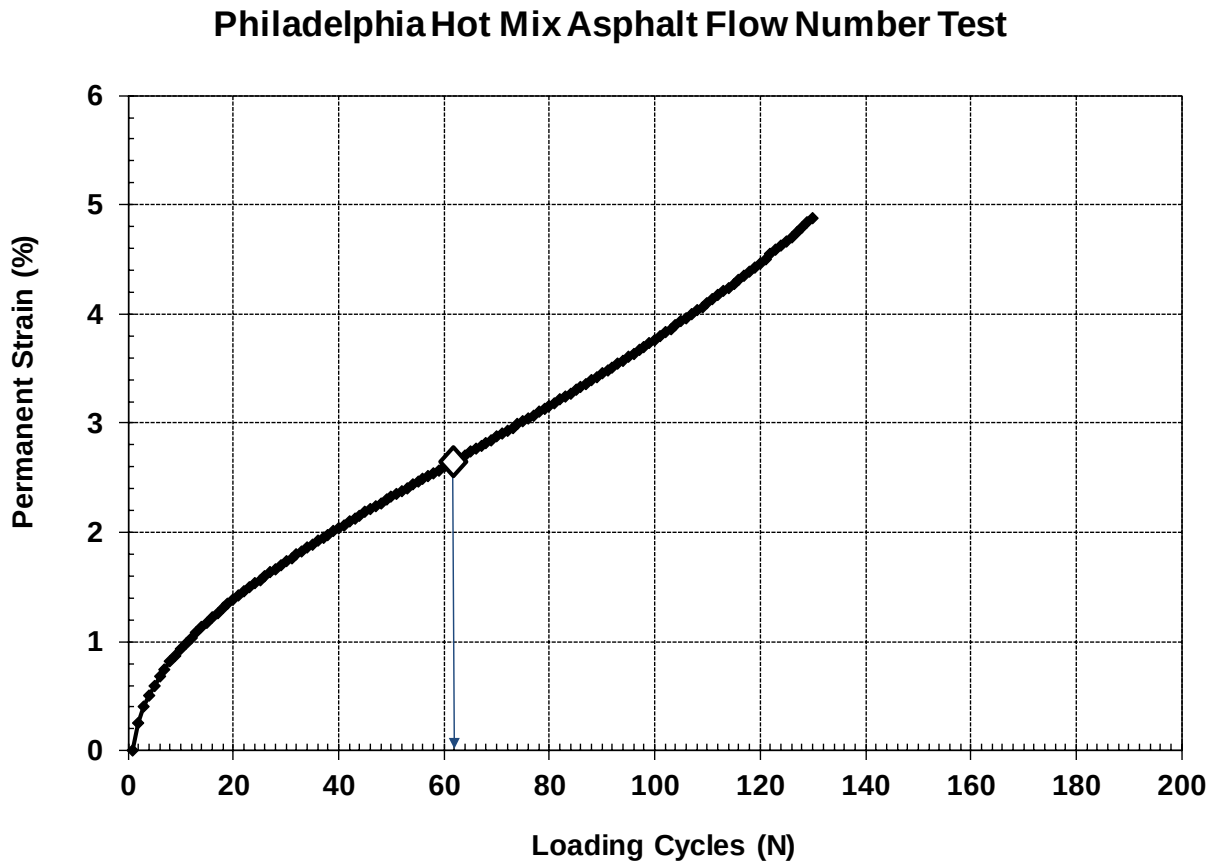

ASTM C39 Standard Test Method for Compressive Strength of Cylindrical Concrete Specimens and **ASTM C215** Fundamental Resonant Frequencies of Concrete Specimens

National Airport Pavement Test Facility William J. Hughes Technical Center
Atlantic City International Airport
New Jersey 08405

Compressive Strength of Concrete Cylinders
ASTM C39

Project: Section: Client: FAA-ATRD

Technician: Professional Engineer: Date:

Sample No.	Date Poured	Date Tested	Age (days)	Sta./Lane/ Slab	FFRC (psi)	Weight (lbs)	Diameter (in)	Length (in)	Area (in^2)	Density (lb/in^3)	Load (lbs)	Compressive Strength (psi)	Type of Fracture

Remarks:

Three Cap Checks : Last ASTM C50 Sulfur Test:

Capping Standard Used: ASTM C1231 ASTM C617 Number of times unbonded cap used prior to testing:

Revised: 5/1/2018

ASTM C78 Flexural Strength of Concrete Beam (Third-Point Loading)

National Airport Pavement Test Facility William J. Hughes Technical Center Atlantic City International Airport New Jersey 08405

Flexural Strength of Concrete Beam (Third-Point Loading)
ASTM C78

Project: Section: Client:
Technician: Professional Engineer: Date:

Sample No.	Date of Pour	Date Tested	Age	Sta.	Transverse Location	Depth 1 (Inches)	Depth 2 (Middle)	Depth 3 (Inches)	Width 1 (Inches)	Width 2 (Middle)	Width 3 (Inches)	Span Length (Inches)	Load (lbs)	Modulus of Rupture (psi)

Measurement to nearest 0.05 inch or 1 mm

Created 12/15/2011

ASTM C136 Standard Test Method for Sieve Analysis of Fine and Coarse Aggregates

Sieve Analysis of Aggregates and Soils
ASTM C117 & C136

National Airport Pavement Test Facility
William J. Hughes Technical Center
Atlantic City International Airport
New Jersey 08405

Project: Example **Date:**
Section:
Description:

Sample No: Procedure: A - Washing with Plain Water
Technician: Prof. Engineer:

Pan No:	124	**Pan Mass (g):**	1315.6
Oven Dry + Pan Mass (g):	2379.1	**Washed + Pan Mass (g):**	2263.8
Original Sample Oven Dry Mass (g):	1063.5	**Washed Mass (g):**	948.2

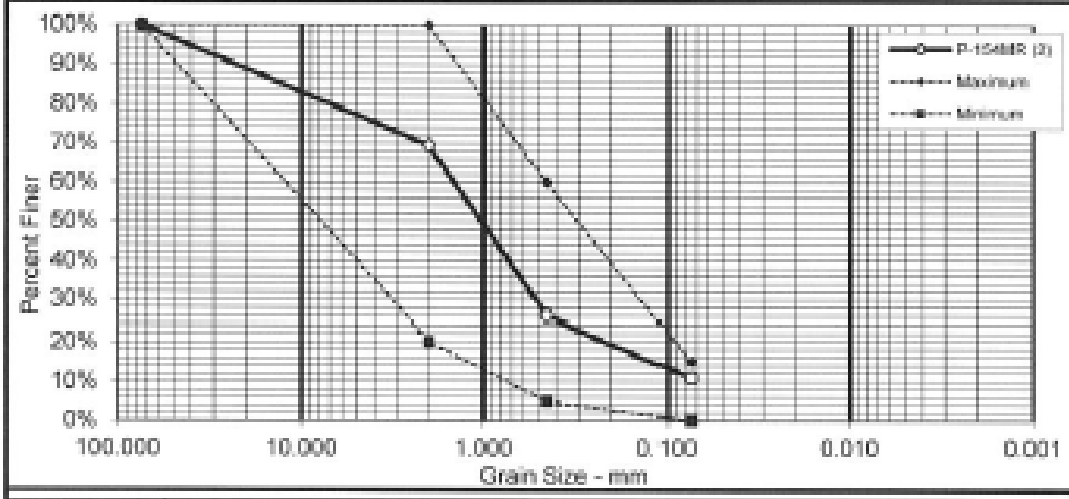

Sieve Size (US inches)	Opening Size (mm)	Retained Mass (g)	Cumulative Mass (g)	Individual Percent Retained	Cumulative Percent Retained	Percent Passing	P-154MR Spec. Percent	
							Max.	Min.
3	75	0	0.0	0.0%	0.0%	100.0%	100%	100%
No. 10	2.0	326	326.0	34%	31%	69%	100%	20%
No. 40	0.450	458.6	784.6	48%	74%	26%	60%	5%
No. 200	0.075	163	947.6	17%	89%	11%	15%	0%
PAN		1.7	949.3	0.2%	89%	0.0%	0.0%	0.0%

Percent Loss by Washing: 11%
Percent Loss of Sieved Material: 0.0%

Atterberg Limits
PL: NP
LL: NV
PI: NP

Coefficients
D_{90}: 3.5931 D_{85}: 3.118 D_{60}: 1.4297
D_{50}: 0.9983 D_{30}: 0.4867 D_{15}: 0.1193
D_{10}: C_u: C_c:

Classification
USCS: SP-SM AASHTO: A-1-b

Remarks: NP = Non-Plastic, NV = No Value
P154MR (2) meets P-154MR specification per DO15 Outdoor Reflect Cracking Phase I

Revised: 5/30/2018

ASTM C469 Static Modulus of Elasticity of Concrete in Compression

Static Modulus of Elasticity & Poisson's Ratio of Concrete in Compression ASTM C469

National Airport Pavement Test Facility
William J. Hughes Technical Center
Atlantic City International Airport
New Jersey 08405

Project: Section

Technician: Date:

Sample :								
Ultimate Load (lbs)								
40%								
Pre-Test (ksi)								
FFRC 1								
FFRC 2								
FFRC 3								
Modulus (psi)								
C-469 1								
C-469 2								
C-469 3								
Poisson's Ratio								
C-469 1								
C-469 2								
C-469 3								
Post Test (ksi)								
FFRC 1								
FFRC 2								
FFRC 3								

Created 12/9/2014

Loading Rate is 35 ± 7 psi/sec.
Loading Rate on a 6" dia cylinder is between approximately 800 lbf/sec and 1100 lbf/sec
Load specimen until 40% of average ultimate load is reached

ASTM C1252 Uncompacted Void Content of Fine Aggregate

	Uncompacted Void Content of Fine Aggregate ASTM C1252		National Airport Pavement Test Facility William J. Hughes Technical Center Atlantic City International Airport New Jersey 08405
Project:		Section	
Technician:		Date:	
Sample No.			
Source			Average
Density of Fine Aggregate, g/cm^3 [G]			
Volume of Cylindrical Measure, cm^3 [V]			
Mass of Cylindrical Measure (g) [M]			
Mass of Cylindrical Measure with Fine Aggregate (g) [F+M]			
Mass of Fine Aggregate (g) [F]			
Uncompacted Voids in Material, (%) [U]			
Average			Created: 2/23/2012

ASTM D422 Hydrometer Particle-Size Analysis of Soils

GRAIN SIZE DISTRIBUTION TEST DATA

4/7/2018

Sample Number: 173 - A
PL: 14 **LL:** 26 **PI:** 12
USCS Classification: SC **AASHTO Classification:** A-6(2)

Sieve Test Data

Dry Sample and Tare (grams)	Tare (grams)	Cumulative Pan Tare Weight (grams)	Sieve Opening Size	Cumulative Weight Retained (grams)	Percent Finer
461.51	0.00	0.00	1"	0.00	100.0
			3/4"	0.00	100.0
			1/2"	0.00	100.0
			3/8"	0.00	100.0
			#4	0.00	100.0
			#10	18.69	96.0
50.93	0.00	0.00	#40	12.30	72.8
			#200	25.09	48.7

Hydrometer Test Data

Hydrometer test uses material passing #10
Percent passing #10 based upon complete sample = 96.0
Weight of hydrometer sample = 50.93
Hygroscopic moisture correction:
Moist weight and tare = 50.51
Dry weight and tare = 50.31
Tare weight = 14.24
Hygroscopic moisture = 0.6%
Table of composite correction values:

Temp., deg. C:	16.4	20.0	22.0	23.7	25.6
Comp. corr.:	-7.5	-5.5	-5.0	-4.5	-4.0

Meniscus correction only = 0.5
Specific gravity of solids = 2.663
Hydrometer type = 152H
Hydrometer effective depth equation: L = 16.294964 - 0.164 x Rm

Elapsed Time (min.)	Temp. (deg. C.)	Actual Reading	Corrected Reading	K	Rm	Eff. Depth	Diameter (mm.)	Percent Finer
1.00	24.9	29.5	25.3	0.0128	30.0	11.4	0.0432	47.8
2.00	24.9	29.0	24.8	0.0128	29.5	11.5	0.0307	46.9
5.00	24.9	28.5	24.3	0.0128	29.0	11.5	0.0195	45.9
15.00	24.8	24.5	20.3	0.0128	25.0	12.2	0.0116	38.3
30.00	24.7	22.5	18.3	0.0128	23.0	12.5	0.0083	34.5
60.00	24.6	18.5	14.2	0.0129	19.0	13.2	0.0060	26.9
250.00	23.6	14.0	9.5	0.0130	14.5	13.9	0.0031	17.9
1440.00	24.4	10.0	5.7	0.0129	10.5	14.6	0.0013	10.7
2901.00	23.9	8.0	3.6	0.0130	8.5	14.9	0.0009	6.7

Federal Aviation Administration

ASTM D854 Standard Test Methods for Specific Gravity of Soil Solids by Water Pycnometer

Specific Gravity
ASTM D854

National Airport Pavement Test Facility
William J. Hughes Technical Center
Atlantic City International Airport
New Jersey 08405

Project:		**Section:**		**Client:**	
Sample No.:		**Soil Class:**		**Date:**	
Method:	B	**Technician:**		**Engineer:**	
Percent Passing 4.75mm:			**Coarse Fraction Class:**		

Volumetric Flask No.	
Mass of Flask M_p (g)	
Mass of Dry Soil M_s (g)	
Test Temp. ^{0}C	
Volume of Flask V_p (ml)	
Mass of Flask & Water Filled to Mark @ Test Temp. $M_{pw,t}$ (g)	
Mass of Flask, Soil & Water Filled to Mark @ Test Temp. $M_{psw,t}$ (g)	
Specific Gravity @ Test Temp. G_t = Ms/(Mpw,t - (Mpws,t - Ms))	
Correction Factor, K	
Specific Gravity @ 20^{0}C $G_{20^\circ c}$	

Reviewed: 5/2/2018

ASTM D1557 Standard Test Methods for Laboratory Compaction Characteristics of Soil Using Modified Effort (56,000 ft-lb/ft^3 (2,700 Kn-M/M^3))

COMPACTION TEST REPORT

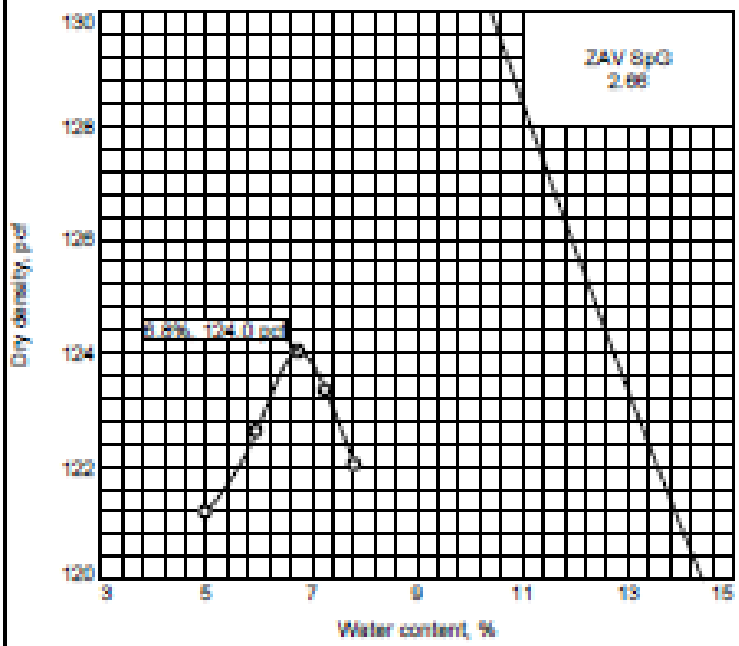

Curve No.

Test Specification:
ASTM D 1557-07 Method A Modified

Preparation Method Dry
Hammer Wt. 10 lb.
Hammer Drop 18 in.
Number of Layers five
Blows per Layer 25
Mold Size 0.03333 cu. ft.
Test Performed on Material Passing #4 **Sieve**

NM ____ **LL** NV **PI** NP
Sp.G. (ASTM D 854) 2.659
%>#4 0.2 **%<No.200** 10.9
USCS SP-SM **AASHTO** A-1-b
Date Sampled 5/14/18
Date Tested 5/18/18
Tested By Reuel Noreen

TESTING DATA

	1	2	3	4	5	6
WM + WS	6308.4	6386.4	6385.0	6348.8	6373.8	
WM	4384.8	4384.8	4384.8	4384.8	4384.8	
WW + T#1	243.3	249.0	227.4	254.9	284.2	
WD + T#1	239.2	243.3	222.8	249.5	275.1	
TARE #1	157.1	158.9	158.8	158.8	158.7	
WW + T #2						
WD + T #2						
TARE #2						
MOISTURE	5.0	6.8	7.3	6.0	7.8	
DRY DENSITY	121.2	124.0	123.3	122.6	122.0	

TEST RESULTS

Maximum dry density = 124.0 pcf

Optimum moisture = 6.8 %

Material Description

Dark gray poorly graded sand with silt

Remarks:

Project No. **Client:**
Project: Outdoor Reflective Cracking Phase I Preconstruction Testing
DO #15
Source: National Paving - Berlin, NJ - 05/14/18 **Sample No.:** P-154MR (2)

Checked by: Matthew Brynick, P.E.
Title: Laboratory Manager

Federal Aviation Administration

Atlantic City, New Jersey

Figure 1

ASTM D2041 Maximum Specific Gravity of Bituminous Paving Mixtures

Maximum Specific Gravity of Bituminous Paving Mixtures (Bowl in Air Method)
ASTM D2041

National Airport Pavement Test Facility
William J. Hughes Technical Center
Atlantic City International Airport
New Jersey 08405

Project: _____ Section: _____ Client: _____

Technician: _____ Prof. Engineer: _____ Date: _____

Bowl Calibration (Three or more readings must be within 1.0 g)

Bowl with Water at 25°C	Trial 1	Trial 2	Trial 3	Trial 4	Trial 5	Average of Readings within 1.0 g [D]

Mix ID	Sample No.	Dry Mass in Air (g) [A]	Bowl Mass with Sample and Water Trial 1 (g)	Bowl Mass with Sample and Water Trial 2 (g)	Bowl Mass with Sample and Water Trial 3 (g)	Average Two Readings within 1.0 g [E]	Gmm

ASTM D2726 Bulk Specific Gravity of Compacted Asphalt

Bulk Specific Gravity of Compacted Asphalt
ASTM D2726

National Airport Pavement Test Facility William J. Hughes Technical Center
Atlantic City International Airport
New Jersey 08405

Project: _____ Section: _____ Client: _____

Technician: _____ Prof. Engineer: _____ Date: _____

Sample No.	Mix	GMM	Dry Mass in Air (grams) [A]	Mass in SSD Condition (grams) [B]	Mass Submerged in Water (grams) [C]	Bulk Specific Gravity [A/(B-C)]	Percent Water Absorbed (%) [(B-A)/(B-C) * 100%]	Air Voids

Remarks: _____

Revised: 5/2/2018

ASTM D4318 Standard Test Methods for Liquid Limit, Plastic Limit, and Plasticity Index of Soils

LIQUID AND PLASTIC LIMITS TEST REPORT

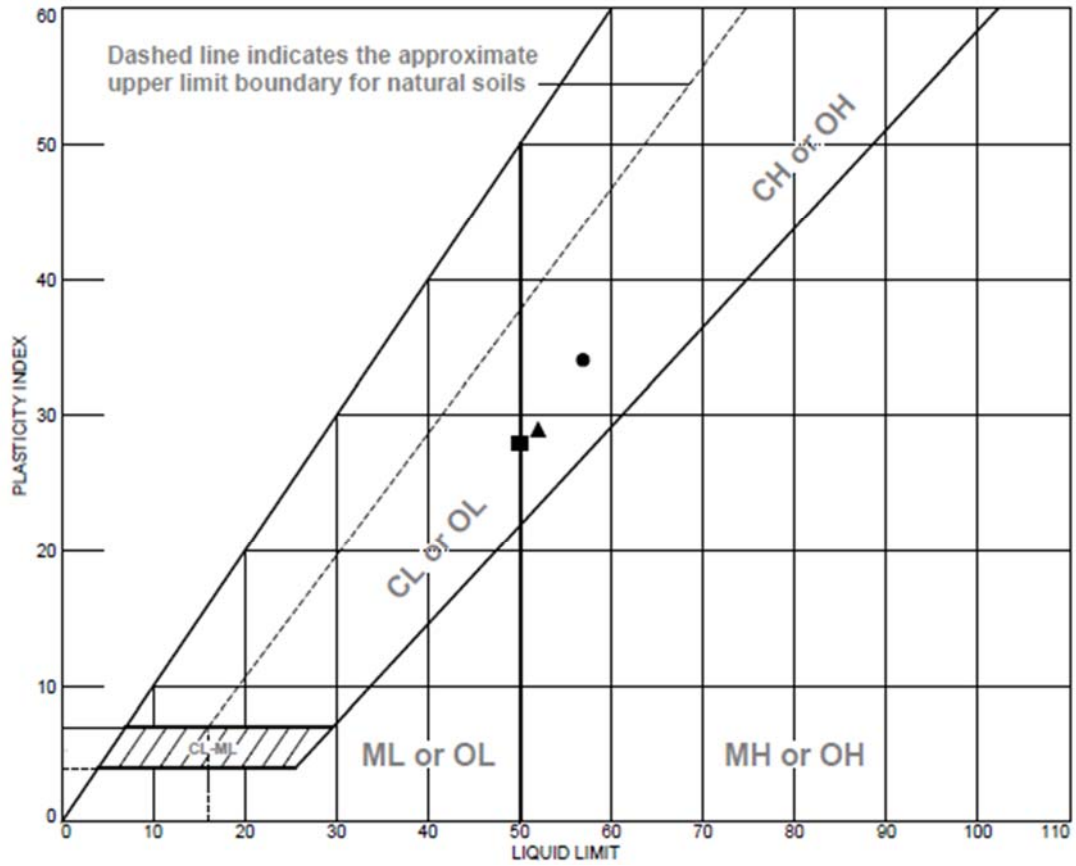

	MATERIAL DESCRIPTION	LL	PL	PI	%<#40	%<#200	USCS
●							
■							
▲							

Project No. Client:

Project:

Dupont Clay

●Source: Subgrade Depth: South - Tilled Sample No.:

■Source: Subgrade Depth: Centerline - Tilled Sample No.:

▲Source: Subgrade Depth: North - Tilled Sample No.:

Remarks:

Federal Aviation Administration

Atlantic City, New Jersey

Figure

ASTM D4694 Deflections with a Falling Weight Type Impulse Load Device

GENERAL DYNAMICS Information Technology

APPLIED RESEARCH ASSOCIATES, INC.

gemini technologies

ASTM D4694 - Heavy Weight Deflectometer (HWD)

Project:
Section:
Date:

Material:
Technician:
Equipment Calibration Date:

Test Results							
Location	Load, (lbf)	Layer 1, (in.)	Modulus 1, (psi)	Layer 2, (in.)	Modulus 2, (psi)	Layer 3, (in.)	Modulus 3, (psi)
16+64	36143	18.0	2965286	0.0	26522	N/A	N/A
16+77	35893	18.0	873657	0.0	29451	N/A	N/A
16+80	35933	18.0	2338672	0.0	21208	N/A	N/A
16+93	36146	18.0	2892734	0.0	25824	N/A	N/A
17+08	35971	18.0	2332109	0.0	21310	N/A	N/A
17+11	36005	18.0	2265619	0.0	20749	N/A	N/A
17+24	36269	18.0	2132582	0.0	28176	N/A	N/A
17+37	35789	18.0	2205493	0.0	20532	N/A	N/A
17+39	35762	18.0	2386094	0.0	21687	N/A	N/A
17+55	36045	18.0	2779122	0.0	24936	N/A	N/A
17+68	35881	18.0	2402656	0.0	21810	N/A	N/A
17+70	35921	18.0	2351177	0.0	21651	N/A	N/A
17+84	36358	18.0	2879297	0.0	25672	N/A	N/A
17+06	35927	18.0	1674082	0.0	15839	N/A	N/A
17+08	36102	18.0	1775098	0.0	16549	N/A	N/A
17+37	35531	18.0	1737383	0.0	16185	N/A	N/A
17+39	35282	18.0	1770313	0.0	16357	N/A	N/A
17+06	35833	18.0	1782813	0.0	16638	N/A	N/A
17+08	36107	18.0	1775098	0.0	16549	N/A	N/A
17+37	34173	18.0	1500625	0.0	14239	N/A	N/A
17+39	35463	18.0	1555820	0.0	14750	N/A	N/A
16+62	36271	18.0	3047327	0.0	27199	N/A	N/A
16+75	35476	18.0	1914219	0.0	17770	N/A	N/A
16+77	35727	18.0	2435156	0.0	22141	N/A	N/A

ASTM D4867 Effect of Moisture on Asphalt Concrete Paving Mixtures

Indirect Tensile Strength of Bituminous Mixtures ASTM D6931
Effect of Moisture on Asphalt Concrete Paving Mixture ASTM D4867

Federal Highway Administration
Materials Laboratory
William J. Hughes
Technical Center
Atlantic City International
Airport NJ 08405

Project:	Philadelphia	Base Lift 1			Section	Base	
Sample Type (Cores or Lab):		Laboratory			Compaction Method:		Gyratory
Additive (if any):			Dosage:			Blows/Gyration	Height
Technician:	MJW				Date:	5/14/2018	
Sample No.	4D	4C	4E	4A	4F	4G	
Diameter, mm:	149.87	150.02	149.97	149.93	149.96	150.06	D
Thickness, mm:	74.92	75.04	74.73	74.77	74.8	74.63	t
Dry Mass,g	3245	3244.3	3249.3	3245	3236	3215.1	A
SSD Mass,g	3248.6	3247.7	3252.8	3248.6	3241.7	3218.5	B
Submerged Mass,g	1974	1971.4	1972.7	1974	1966.1	1947.2	C
Volume, cc	1274.6	1276.3	1280.1	1274.6	1276.6	1271.3	E = B - C
Gmb	2.546	2.542	2.538	2.546	2.535	2.529	F = A/E
Gmm	2.639	2.639	2.639	2.639	2.639	2.639	G
% Air Void	3.53	3.68	3.82	3.53	3.95	4.17	H = 100 x (G-F)/G
Volume Air Voids, cc	44.97	46.93	48.94	44.97	50.38	53.00	I = HE/100
Load, N	24113	21958	22686				P = lbf x 4.448
Saturated	Minutes:	5	Vacuum:	20 in Hg	20 in Hg	20 in Hg	
SSD Mass,g				3270.4	3276.1	3252.6	B'
Submerged Mass,g				1990.5	2004.9	1986.1	C'
Volume, cc				1279.9	1271.2	1266.5	E' = B' - C'
Vol Water, cc				25.4	40.1	37.5	J' = B' - A
% Saturation				56.485159961	79.59832234	70.757904411	100 X J'/I
%Swell				0.42	-0.42	-0.38	100 X (E' - E)/E
Conditioning Used:				Freeze	Freeze	Freeze	Soak or Freeze
Thickness, mm:				74.87	74.8	74.68	t"
SSD Mass, g				3277.4	3277.9	3255.2	B"
Submerged Mass, g				2006.5	2006.4	1991.3	C"
Volume, cc				1270.9	1271.5	1263.9	E" = B" - C"
Volume Absorbed, cc				32.4	41.9	40.1	J" = B" - A
% Saturation				72.06	83.17	75.68	100 x J"/I
% Swell				-0.29	-0.40	-0.58	100 x (E" - E)/E
Load, N				5014	5369	4603	P" = lbf x 4.448
Dry Strength, kPa	1567.2	1324.8	1288.7				2000P/(πtD)
Wet Strength, kPa				284.4	304.7	261.5	2000P"/(πt"D)
TSR						0.22	Wet /Dry Strength
Visual Moisture Damage	Small Stripping						
Crack/Break Aggregate	Very Little						

Date Created 2/25/2013

ASTM D5444 Mechanical Size Analysis of Extracted Aggregate

Mechanical Size Analysis of Extracted Aggregate
ASTM D5444

National Airport Pavement Test Facility
William J. Hughes Technical Center
Atlantic City International Airport
New Jersey 08405

Project: Example **Date:** _____
Section: _____
Description: _____

Sample No: _____ **Procedure:** _____
Technician: _____ **Prof. Engineer:** _____

Pan No: _____ **Pan Mass (g):** _____
Oven Dry + Pan Mass (g): _____ **Washed + Pan Mass (g):** _____
Original Sample Oven Dry Mass (g): _____ **Washed Mass (g):** _____

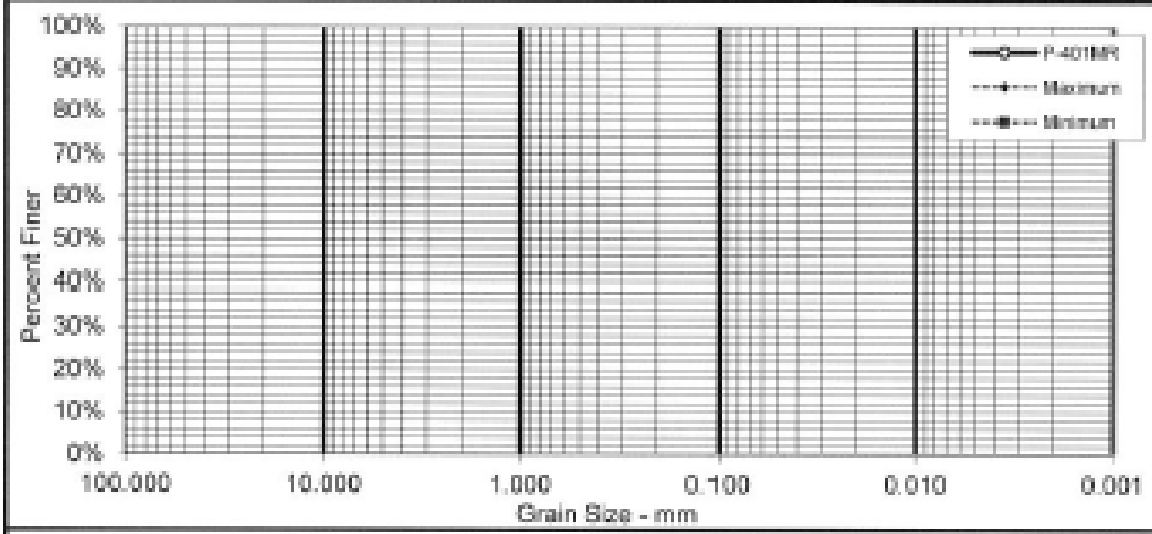

Sieve Size (US inches)	Opening Size (mm)	Retained Mass (g)	Cumulative Mass (g)	Individual Percent Retained	Cumulative Percent Retained	Percent Passing	Spec. Percent	
							Max.	Min.
			0.0	0%	0%	100%		
			0.0	0%	0%	100%		
			0.0	0%	0%	100%		
			0.0	0%	0%	100%		
			0.0	0%	0%	100%		
PAN			0.0	0%	0%	0.0%		

Percent Loss by Washing: 0%
Percent Loss of Sieved Material: 0.00%

Remarks: _____

Revised: 5/30/2018

ASTM D6307 Asphalt Content of Hot-Mix by Ignition Method

National Airport Pavement Test Facility/William J. Hughes Technical Center
Atlantic City International Airport
New Jersey/08405

Asphalt Content of Hot-Mix by Ignition Method
ASTM D6307

Project: _____ Section: _____ Mix ID: _____ Technician: _____

Aggregate: _____ Date: _____ Prof. Engineer _____

Sample No.	Station & Offset	Mass of Empty Basket	Basket + Sample Before Ignition (grams)	Basket + Sample After Ignition (grams)	Mass Before ignition (grams) [M_B]	Mass After ignition (grams) [M_A]	Calibration Factor [C_F]	Asphalt Content from oven (%)	Asphalt Content by calculation (%)

Calibration Factor Determination (if Required)

Sample No.	Mass of Aggregate	Mass of Asphalt	Percent Asphalt [P]	Mass of Empty Basket	Basket + Sample Before Ignition (grams)	Basket + Sample After Ignition (grams)	Mass Before ignition (grams) [M]	Mass After ignition (grams) [M_A]	Asphalt Content from oven (%)	Calibration Factor [C_F]

Average:

Revised: 5/2/2018

ASTM D6951 Dynamic Cone Penetrometer (DCP)

GENERAL DYNAMICS Information Technology

APPLIED RESEARCH ASSOCIATES, INC.

gemini technologies

ASTM D6951 - Dynamic Cone Penetrometer (DCP)

Project: DO #50 - CC9
Section: Overload
Location: STA. 2+95, -15ft
Depth of Zero Point Below Surface (in): 6.5
Material Type: P-152 (DuPont Clay)
Material Classification Option: For CH soils
Ground Conditions: Dry and free from contamination

Date: 6/11/18
Technician: CT, SC
Hammer Weight (lbs.): 10.1 lbs (Single Weight)
Weather: N/A
Water Table Depth (ft): N/A
Moisture Content (%): 28.5

DCP Test Results

Total Number of Blows	Number of Blows (Between Test Readings)	Cumulative Penetration (in.)	Penetration Between Readings (in.)	Penetration per Blow	Hammer Factor (lbs.)	DCP Index (in./blow)	CBR (%)	Moisture Content (%)
0	0	0.00	-	-	-	-	-	28.5
1	1	3.78	3.78	3.780	2	7.559	2	28.5
2	1	5.94	2.17	2.165	2	4.331	3	28.5
3	1	7.20	1.26	1.260	2	2.520	5	28.5
4	1	8.31	1.10	1.102	2	2.205	6	28.5
5	1	9.49	1.18	1.181	2	2.362	6	28.5
6	1	10.55	1.06	1.063	2	2.126	6	28.5
7	1	11.34	0.79	0.787	2	1.575	9	28.5
8	1	12.09	0.75	0.748	2	1.496	9	28.5
9	1	12.80	0.71	0.709	2	1.417	10	28.5
10	1	13.43	0.63	0.630	2	1.260	11	28.5
11	1	14.17	0.75	0.748	2	1.496	9	28.5
12	1	14.84	0.67	0.669	2	1.339	10	28.5
13	1	15.55	0.71	0.709	2	1.417	10	28.5
14	1	16.22	0.67	0.669	2	1.339	10	28.5
15	1	16.81	0.59	0.591	2	1.181	12	28.5
16	1	17.48	0.67	0.669	2	1.339	10	28.5
17	1	18.07	0.59	0.591	2	1.181	12	28.5

ASTM D7313 Fracture Energy of Asphalt – Aggregate Mixture Using the Disk-Shaped Compact Tension Geometry

DCT Test Results and Bulk Specific Gravity of Compacted Asphalt
ASTM D7313 and D2726

National Airport Pavement Test Facility William J. Hughes Technical Center
Atlantic City International Airport
New Jersey 08405

Project: Philadelphia
Section: DCT Test Specimens - Surface Mix
Client: FAA TO#24
Technician: Prof. Engineer: Mathew Borrick
Date: 6/12/2018

Sample No.	Thickness, Diameter, Notch, Ligament (mm)	GMM [A]	Dry Mass in Air (grams) [B]	Mass in SSD Condition (grams) [C]	Mass Submerged in Water (grams) [D]	Bulk Specific Gravity [E] [B/(C-D)]	Percent Water Absorbed (%) [(C-B)/(C-D) x 100%]	Air Voids (%) [(1-(E/A)) x 100%]	Fracture Energy (J/m²)	Peak Load (kN)	Time at Peak Load (s)	Test Temp. (°C)
DCT-1	51.1, 149.9, 61.7, 82.0	2.705	2148.7	2150.6	1328.3	2.613	0.23	3.4	683	4.4	6.6	-12.1
DCT-2	51.1, 149.9, 61.7, 84.4	2.705	2138.0	2140.3	1316.6	2.596	0.28	4.0	643	4.5	8.3	-12.1
DCT-3	51.5, 149.8, 60.8, 83.4	2.705	2176.7	2179.0	1345.6	2.612	0.28	3.4	782	4.5	7.6	-12.1

Remarks:

Revised: 8/13/2018

ASTM E2583 LWD Testing

ASTM E2583 - Light Weight Deflectometer (LWD)

Project: RC Outdoor Phase I
Date: 06/29/2018
Technician: Jason Alcoba
Layer Material: P-152MR(Existing Subgrade)
Lift Number: 1
Layer Thickness (in): N/A
Plate Diameter (in): 11.8
Number of Sensors: 1

Radial Offset of Sensor (in): 0
Height of Drops (in): 6, 12, 18, 24
Falling Weight (lbs): 22.04
Buffer Type: Hard
Ground Temperature (°F): 97-108
Ambient Temperature (°F): 94
Equipment Calibration Date: N/A

Preconditioning Drops					
Load 1, lbf	Load 2, lbf	Load 3, lbf	Load 4, lbf	Load 5, lbf	% Difference <3%?
1080	1080	1086	1082	1082	Yes

Test Results						
Location	Height, in	Load, lbf	Stress, psi	Deflection, mils	Stiffness, ksi	% Difference <3%?
0+07.5, 0	6	577.25	5.25	4.1	13.25	Yes
	12	740.7	6.75	5.35	13.05	Yes
	18	905.5	8.25	6.8	12.55	Yes
	24	1077.2	9.8	8.4	12.05	Yes
0+17.5, 0	6	583.55	5.3	3.3	16.6	Yes
	12	752.9	6.85	4.3	16.5	Yes
	18	917.3	8.4	5.3	16.4	Yes
	24	1085.4	9.9	6.5	15.8	Yes
0+27.5, 0	6	581.9	5.3	5	11	Yes
	12	735.45	6.7	6.3	11	Yes
	18	914.05	8.3	8	10.75	Yes
	24	1074.2	9.8	9.7	10.5	Yes
0+37.5, 0	6	576.9	5.3	11.35	4.85	Yes
	12	729.8	6.65	14.85	4.65	Yes
	18	887.95	8.1	17.75	4.7	Yes
	24	1079.55	9.9	21.9	4.7	Yes
0+47.5, 0	6	570.15	5.2	4.45	12.1	Yes
	12	737.2	6.7	5.85	11.9	Yes
	18	903.45	8.25	7.2	11.85	Yes
	24	1079.5	9.85	8.7	11.75	Yes
0+57.5, 0	6	564.65	5.15	1.7	31.4	Yes
	12	734.25	6.7	2.3	30.2	Yes
	18	909.3	8.3	2.9	29.6	Yes
	24	1084.15	9.9	3.55	28.9	Yes
0+97.5, 0	6	562.1	5.1	1.9	27.8	Yes
	12	733.85	6.7	2.65	26.2	No
	18	903.4	8.25	3.4	25.15	Yes
	24	1080.95	9.9	4.2	24.4	Yes

Data Reviewed By: Matthew Brynick Page 1 of 2 Date: July 6, 2018

ASTM E2583 - Light Weight Deflectometer (LWD)

Project: RC Outdoor Phase I
Date: 06/29/2018
Technician: Jason Alcoba
Layer Material: P-152MR(Existing Subgrade)
Lift Number: 1
Layer Thickness (in): N/A
Plate Diameter (in): 11.8
Number of Sensors: 1

Radial Offset of Sensor (in): 0
Height of Drops (in): 6, 12, 18, 24
Falling Weight (lbs): 22.04
Buffer Type: Hard
Ground Temperature (°F): 97-108
Ambient Temperature (°F): 94
Equipment Calibration Date: N/A

Preconditioning Drops						
Load 1, lbf	Load 2, lbf	Load 3, lbf	Load 4, lbf	Load 5, lbf	% Difference <3%?	
1080	1080	1086	1082	1082	Yes	
Test Results						
Location	Height, in	Load, lbf	Stress, psi	Deflection, mils	Stiffness, ksi	% Difference <3%?
1+07.5, 0	6	559.2	5.1	2.8	18.9	Yes
	12	718.5	6.55	3.85	17.6	Yes
	18	894.1	8.15	4.9	17.2	Yes
	24	1067.3	9.7	6	16.7	Yes
1+17.5, 0	6	564.1	5.15	1.7	31.4	Yes
	12	727.65	6.6	2.3	29.7	Yes
	18	904.25	8.25	2.8	30.5	Yes
	24	1073.75	9.8	3.5	29	Yes
1+27.5, 0	6	563.4	5.15	3.2	16.65	Yes
	12	726.55	6.65	4.1	16.8	Yes
	18	901.8	8.2	5	17	Yes
	24	1073.25	9.8	6	16.9	Yes
1+37.5, 0	6	561.65	5.1	1.5	35.2	Yes
	12	724.65	6.6	2.1	32.5	Yes
	18	901.7	8.25	2.6	32.9	Yes
	24	1076.6	9.8	3.2	31.7	Yes
1+47.5, 0	6	565.85	5.2	2.1	25.6	Yes
	12	732.95	6.7	2.8	24.8	Yes
	18	898.5	8.2	3.55	23.95	Yes
	24	1080.5	9.85	4.25	24	Yes

Additional Comments: *Average Modulus at 24-in. drop height: 18.9 ksi.*

P-152MR Properties from Nuclear Gauge Testing: Avg. Moisture Content: 9.9%, Avg. Density: 95.3%

Data Reviewed By: Matthew Brynick Page 2 of 2 Date: July 6, 2018

Customized Overlay Test

The following parameters are usually reported for customized Overlay Tester (OT):

- *Strain Parameters:*
  - *Initial Strain*: Defined as the peak strain for the first cycle.
  - *Failure Strain*: Corresponds to the strain at *IF*.
  - *Cycles at IF*: Corresponds to the number of cycles at *IF*.
  - *Strain at* $Nf_{(NLC)}$: Corresponds to strain at $Nf_{(NLC)}$.
- *Fatigue Parameters:*
  - $Nf_{(75\%)}$: Corresponds to the number of cycles to 75% load reduction.
  - $Nf_{(NLC)}$: Corresponds to the number of cycles to the failure point.
  - $Nf_{(crack)}$: Corresponds to the number of cycles when the load starts to decrease at a higher rate after the $Nf_{(NLC)}$ point.
  - $Nf_{(czone)}$: Corresponds to the number of cycles between $Nf_{(NLC)}$ *and* $Nf_{(crack)}$.
- *Fracture Parameters:*
  - *Critical Fracture Energy* (G_c): Fracture energy calculated for the first loading cycle.
  - *Dissipated Energy* (DE_{ini}): Corresponds to the dissipated energy calculated from the first loading cycle.
  - *Load Reduction Rate (LRR)*: Slope of load vs. number of cycles (%).
  - *Cracking Resistance Index (CRI)*: Represents the reduction in load required to propagate cracking under the cyclic loading conditions of the OT.

D-PSPA and PSPA Testing

D-Portable Seismic Pavement Analyzer (D-PSPA)

Project: RC Outdoor Phase I
Date: 06/29/2018
Technician: Jason Alcoba
Layer Material: P152MR (Existing Subgrade)
Lift Number: 1
Layer Density (pcf): 125.7
Poisson's Ratio: 0.35
Number of Receivers: 2

Source-near Receiver Spacing (in): 4
Near-far Receiver Spacing (in): 6
Ground Temperature (°F): 97-108
Ambient Temperature (°F): 94
Are wave-shapes reasonable? Yes
Are reduced (dispersion) curves close? Yes
Calibration performed according to SOP? Yes

Test Results			
Station	**Offset, ft**	**Average Temperature, °F**	**Average Modulus, ksi**
0+07.5	0	97.3	23.3
0+17.5	0	99.6	27.0
0+27.5	0	103.1	37.7
0+37.5	0	104.5	39.2
0+47.5	0	106.0	26.3
0+57.5	0	106.0	71.8
0+97.5	0	99.1	73.0
1+07.5	0	101.3	54.0
1+17.5	0	104.7	70.2
1+27.5	0	105.5	24.5
1+37.5	0	106.0	60.2
1+47.5	0	105.6	N/A

Additional Comments: *Avg. Modulus: 46.1 ksi*
Properties from Nuclear Gauge Testing: Avg. Moisture Content: 9.9%, Avg. Density: 95.3%
At Station 1+47.5 a good set of reduction curves not obtained after 30 tests.

Field Placement Notes for P-401, P-403

GENERAL DYNAMICS Information Technology | APPLIED RESEARCH ASSOCIATES, INC. | gemini technologies

CC9 - Field Placement Notes for P-401, P-403

Date: 4/20/18

Inspector: SB

Ground Temperature (F): 54

Ambient Temperature (F): 64

Asphalt Mix: AE Stone - P-401 (PG 64-22)

Gmm (from lab): 2.478

Gmb (from lab): 2.345

Target Compacted Lift Thickness (in): 4.5

Truck Arrival Time Information				
Truck #	Time Dispatched	Time Arrived	Time to Paver	Notes/Comments
1	8:08am	8:22am	8:25am	None
2	8:16am	8:31am	8:35am	None
3	8:23am	8:36am	8:40am	None

Asphalt Temperatures (F)				
In Truck	Behind Paver	Mat at Compaction	Joint at Compaction	Notes/Comments
318F	295F	248F	196F	None
348F	318F	262F	202F	None
326F	299F	233F	200F	None

Paver Stoppages			
Location	Time Stopped	Time Resumed	Reason for Stoppage
L1, Sta. 0+47	8:36am	8:41am	Needed more asphalt

Placement Location: L1, L3 - Station 0+00 to 3+00

Notable Deficiencies (e.g. segregation, divots, etc.): Segregation in L1 from 0+36 to 1+01

Additional Comments: Nuclear density gauge results attached. All temperatures taken with IR gun.

Field Placement Notes for P-154, P-209

GENERAL DYNAMICS Information Technology

APPLIED RESEARCH ASSOCIATES, INC.

gemini technologies

CC9 - Field Placement Notes for P-154, P-209

Date: 5/18/2018
Inspector: SB
Material Type: AE Stone (P-154)

Ground Temperature (F): 62
Ambient Temperature (F): 67
Target Thickness (in.): 6.5

M.C. (plant, %): 5.4
Target M.C. (%): 6.8
Target Density (pcf): 132.2

Truck Arrival Time Information								
Truck #	# of Tons	Time Arrived	Truck #	# of Tons	Time Arrived	Truck #	# of Tons	Time Arrived
304	13	8:05am	304	13	10:04			
329	13	8:17am	329	6	10:45			
318	13	8:29am						
332	13	8:35am						
312	13	8:55am						
365	13	9:02am						
304	13	9:15am						
329	13	9:23am						
318	13	9:33am						
332	13	9:39am						
312	13	9:41am						
365	13	9:58am						

Placement Location: Full width from Station 0+00 to 3+00

Underlying Course Condition: Dry and free from dirt and other foreign substances

Visible Deficiencies (e.g. segregation, irregularities, uncompacted areas): Material appeared segregated from Station 0+25 to 0+57, offset -30' to -18'. Visibly appeared to have waves in surface along -5' offset line.

Brief Description of Construction Methods: P-154 was unloaded at Station 3+15, offset -15'. Bulldozer pushed material from this location onto the project area, starting on the north side from 3+00 to 0+00 and then proceeding to the south side from 3+00 to 0+00. Material was backdragged with the bulldozer to level the surface. Moisture content samples were taken.

Additional Comments: Water will be added using BDF on 5/19/2018 depending on M.C. results. Smoothness acceptance testing anticipated on 5/20/2018.

Smoothness/Straightedge Testing

GENERAL DYNAMICS Information Technology | APPLIED RESEARCH ASSOCIATES, INC. | gemini technologies

Smoothness/Straightedge Testing

Project: DO #50 - CC9
Date: 5/23/2018
Inspector/Technician: SB, JA

Material: P-154
Deviation Limit: Less than 3/8"
Specification for Approval: 85% Passing

Test Results									
Station	Transverse Measurements - Pass? (Y/N)					Longitudinal Measurements - Pass? (Y/N)			
	Offset, ft					Offset, ft			
	-30 to -18	-18 to -6	-6 to 6	6 to 18	18 to 30	-25	-10	10	25
0+00	N	Y	Y	Y	Y	Y	Y	Y	Y
0+20	Y	Y	Y	Y	Y	Y	Y	Y	Y
0+40	Y	Y	Y	Y	N	Y	Y	Y	Y
0+60	Y	N	Y	Y	Y	Y	Y	Y	Y
0+80	Y	Y	Y	Y	Y	Y	N	Y	Y
1+00	Y	Y	Y	Y	Y	Y	Y	Y	Y
1+20	Y	Y	Y	Y	Y	Y	Y	Y	Y
1+40	Y	Y	Y	Y	Y	Y	Y	Y	Y
1+60	N	Y	Y	N	Y	Y	Y	Y	Y
1+80	N	Y	Y	Y	Y	Y	Y	Y	Y
2+00	Y	N	Y	Y	N	Y	Y	Y	Y
2+20	Y	Y	Y	Y	N	Y	Y	Y	Y
2+40	Y	Y	N	Y	Y	Y	Y	Y	Y
2+60	Y	N	N	Y	Y	Y	Y	Y	Y
2+80	Y	N	Y	Y	N	Y	Y	Y	Y
3+00	Y	Y	Y	Y	Y	Y	Y	Y	Y
3+20									
3+40									
3+60									
3+80									
4+00									
4+20									
4+40									
4+60									
4+80									
5+00									
# Pass	13	12	14	15	12	16	15	16	16
# Fail	3	4	2	1	4	0	1	0	0
% Fail	18.75	25.00	12.50	6.25	25.00	0.00	6.25	0.00	0.00
Total Passing, %		89.58							

Additional Comments: Initial testing for 6' to 18' offset yielded unsatisfactory results. Contractor elected to re-roll this area, at which point straightedge testing was re-done.

APPENDIX D

Specifications for Outdoor Reflective Cracking Phase I Construction

Federal Aviation Administration
William J. Hughes Technical Center
National Airport Pavement Materials Research Center
Atlantic City International Airport, New Jersey

SPECIFICATIONS

FOR

Outdoor Reflective Cracking Phase I Construction

100% Submission

SRA INTERNATIONAL INCORPORATED, A CSRA COMPANY
EGG HARBOR TOWNSHIP, NJ

April 23, 2018

PROJECT TABLE OF CONTENTS

General Provisions

Section 10MR	Definition of Terms
Section 40MR	Scope of Work
Section 50MR	Control of Work
Section 60MR	Control of Materials
Section 80MR	Execution and Progress
Section 90MR	Measurement and Payment

Paving Materials

Item P-152MR	Excavation, Subgrade and Embankment
Item P-154MR	Subbase Course
Item P-209MR	Crushed Aggregate Base Course
Item P-401MR	Hot Mix Asphalt (HMA) Pavements
Item P-403	Hot Mix Asphalt (HMA) Pavements (Surface Course)
Item P-501MR	Portland Cement Concrete (PCC) Pavement
Item P-603MR	Bituminous Tack Coat
Item P-604MR	Compression Joint Seals for Concrete Pavements

Part 1 – General Provisions

Section 10MR Definition of Terms

Whenever the following terms are used in these specifications, in the contract, or in any documents or other instruments pertaining to construction where these specifications govern, the intent and meaning shall be interpreted as follows:

10MR-01 AASHTO. The American Association of State Highway and Transportation Officials, the successor association to AASHO.

10MR-02 Access road. The right-of-way, the roadway and all improvements constructed thereon connecting the airport to a public highway.

10MR-03 Advertisement. A public announcement, as required by local law, inviting bids for work to be performed and materials to be furnished.

10MR-04 Airport Improvement Program (AIP). A grant-in-aid program, administered by the Federal Aviation Administration (FAA).

10MR-05 ASTM International (ASTM). Formerly known as the American Society for Testing and Materials (ASTM).

10MR-06 Award. The Owner's notice to the successful bidder of the acceptance of the submitted bid.

10MR-07 Bidder. Any individual, partnership, firm, or corporation, acting directly or through a duly authorized representative, who submits a proposal for the work contemplated.

10MR-08 Calendar day. Every day shown on the calendar.

10MR-09 Change order. A written order to the Contractor covering changes in the plans, specifications, or proposal quantities and establishing the basis of payment and contract time adjustment, if any, for the work affected by such changes. The work, covered by a change order, must be within the scope of the contract.

10MR-10 Contract. The written agreement covering the work to be performed. The awarded contract shall include, but is not limited to: Advertisement, Contract Form, Proposal, Performance Bond, Payment Bond, any required insurance certificates, Specifications, Plans, and any addenda issued to bidders.

10MR-11 Contract item (pay item). A specific unit of work for which a price is provided in the contract.

10MR-12 Contract time. The number of calendar days or working days, stated in the proposal, allowed for completion of the contract, including authorized time extensions. If a calendar date of completion is stated in the proposal, in lieu of a number of calendar or working days, the contract shall be completed by that date.

10MR-13 Contractor. The individual, partnership, firm, or corporation primarily liable for the acceptable performance of the work contracted and for the payment of all legal debts pertaining to the work who acts directly or through lawful agents or employees to complete the contract work.

10MR-14 Contractor's laboratory. The Contractor's quality control organization in accordance with the Contractor Quality Control Program.

10MR-15 Construction Safety and Phasing Plan (CSPP). The overall plan for safety and phasing of a construction project developed by the airport operator, or developed by the airport operator's consultant and approved by the airport operator. It is included in the invitation for bids and becomes part of the project specifications.

10MR-16 Drainage system. The system of pipes, ditches, and structures by which surface or subsurface waters are collected and conducted from the airport area.

10MR-17 Engineer. The individual, partnership, firm, or corporation duly authorized by the Owner to be responsible for engineering observation of the contract work and acting directly or through an authorized representative.

10MR-18 Equipment. All machinery, together with the necessary supplies for upkeep and maintenance, and also all tools and apparatus necessary for the proper construction and acceptable completion of the work.

10MR-19 Extra work. An item of work not provided for in the awarded contract as previously modified by change order or supplemental agreement, but which is found by the Engineer to be necessary to complete the work within the intended scope of the contract as previously modified.

10MR-20 FAA. The Federal Aviation Administration of the U.S. Department of Transportation. When used to designate a person, FAA shall mean the Administrator or his or her duly authorized representative.

10MR-21 Federal specifications. The Federal Specifications and Standards, Commercial Item Descriptions, and supplements, amendments, and indices thereto are prepared and issued by the General Services Administration of the Federal Government.

10MR-22 Force account. Force account work is planning, engineering, or construction work done by the Sponsor's employees.

10MR-23 Inspector. An authorized representative of the Engineer assigned to make all necessary observations and/or observation of tests of the work performed or being performed, or of the materials furnished or being furnished by the Contractor.

10MR-24 Intention of terms. Whenever, in these specifications or on the plans, the words "directed," "required," "permitted," "ordered," "designated," "prescribed," or words of like import are used, it shall be understood that the direction, requirement, permission, order, designation, or prescription of the Engineer is intended; and similarly, the words "approved," "acceptable," "satisfactory," or words of like import, shall mean approved by, or acceptable to, or satisfactory to the Engineer, subject in each case to the final determination of the Owner.

Any reference to a specific requirement of a numbered paragraph of the contract specifications or a cited standard shall be interpreted to include all general requirements of the entire section, specification item, or cited standard that may be pertinent to such specific reference.

10MR-25 Laboratory. The official testing laboratories of the Owner or such other laboratories as may be designated by the Engineer. Also referred to as "Engineer's Laboratory" or "quality assurance laboratory."

10MR-26 Major and minor contract items. A major contract item shall be any item that is listed in the proposal, the total cost of which is equal to or greater than 20% of the total amount of the award contract. All other items shall be considered minor contract items.

10MR-27 Materials. Any substance specified for use in the construction of the contract work.

10MR-28 NAPMRC. The National Airport Pavement and Materials Research Center.

10MR-29 NAPTF. The National Airport Pavement Testing Facility.

10MR-30 Notice to Proceed (NTP). A written notice to the Contractor to begin the actual contract work on a previously agreed to date. If applicable, the Notice to Proceed shall state the date on which the contract time begins.

10MR-31 Owner. The term "Owner" shall mean the party of the first part or the contracting agency signatory to the contract. Where the term "Owner" is capitalized in this document, it shall mean airport Sponsor only.

10MR-32 Pavement. The combined surface course, base course, and subbase course, if any, considered as a single unit.

10MR-33 Payment bond. The approved form of security furnished by the Contractor and his or her surety as a guaranty that the Contractor will pay in full all bills and accounts for materials and labor used in the construction of the work.

10MR-34 Performance bond. The approved form of security furnished by the Contractor and his or her surety as a guaranty that the Contractor will complete the work in accordance with the terms of the contract.

10MR-35 Plans. The official drawings or exact reproductions which show the location, character, dimensions and details of the airport and the work to be done and which are to be considered as a part of the contract, supplementary to the specifications.

10MR-36 Project. The agreed scope of work for accomplishing specific airport development with respect to a particular airport.

10MR-37 Proposal. The written offer of the bidder (when submitted on the approved proposal form) to perform the contemplated work and furnish the necessary materials in accordance with the provisions of the plans and specifications.

10MR-38 Proposal guaranty. The security furnished with a proposal to guarantee that the bidder will enter into a contract if his or her proposal is accepted by the Owner.

10MR-39 Specifications. A part of the contract containing the written directions and requirements for completing the contract work. Standards for specifying materials or testing which are cited in the contract specifications by reference shall have the same force and effect as if included in the contract physically.

10MR-40 Sponsor. A Sponsor is defined in 49 USC § 47102(24) as a public agency that submits to the FAA for an AIP grant; or a private Owner of a public-use airport that submits to the FAA an application for an AIP grant for the airport.

10MR-41 Structures. Airport facilities such as bridges; culverts; catch basins, inlets, retaining walls, cribbing; storm and sanitary sewer lines; water lines; underdrains; electrical ducts, manholes, handholes, lighting fixtures and bases; transformers; flexible and rigid pavements; navigational aids; buildings; vaults; and, other manmade features of the airport that may be encountered in the work and not otherwise classified herein.

10MR-42 Subgrade. The soil that forms the pavement foundation.

10MR-43 Superintendent. The Contractor's executive representative who is present on the work during progress, authorized to receive and fulfill instructions from the Engineer, and who shall supervise and direct the construction.

10MR-44 Supplemental agreement. A written agreement between the Contractor and the Owner covering (1) work that would increase or decrease the total amount of the awarded contract, or any major contract item, by more than 25%, such increased or decreased work being within the scope of the originally awarded contract; or (2) work that is not within the scope of the originally awarded contract.

10MR-45 Surety. The corporation, partnership, or individual, other than the Contractor, executing payment or performance bonds that are furnished to the Owner by the Contractor.

10MR-46 Work. The furnishing of all labor, materials, tools, equipment, and incidentals necessary or convenient to the Contractor's performance of all duties and obligations imposed by the contract, plans, and specifications.

10MR-47 Working day. A working day shall be any day other than a legal holiday, Saturday, or Sunday on which the normal working forces of the Contractor may proceed with regular work for at least six (6) hours toward completion of the contract. When work is suspended for causes beyond the Contractor's control, it will not be counted as a working day. Saturdays, Sundays and holidays on which the Contractor's forces engage in regular work will be considered as working days.

END OF SECTION 10MR

Section 40MR Scope of Work

40MR-01 Project Description. The work consists of constructing (15) 10’ x 10’ x 9” thick P-501 Portland Cement Concrete slabs that will overlaid with a P-401 Hot Mix Asphalt. This will be built on top of a P-154 subbase within the perimeter of the outdoor testing area for NAPMRC.

40MR-02 Intent of contract. The intent of the contract is to provide for construction and completion, in every detail, of the work described. It is further intended that the Contractor shall furnish all labor, materials, equipment, tools, transportation, and supplies required to complete the work in accordance with the plans, specifications, and terms of the contract.

40MR-03 Alteration of work and quantities. The Owner reserves and shall have the right to make such alterations in the work as may be necessary or desirable to complete the work originally intended in an acceptable manner.

40MR-04 Omitted items. The Engineer may, in the Owner’s best interest, omit from the work any contract item, except major contract items. Major contract items may be omitted by a supplemental agreement. Such omission of contract items shall not invalidate any other contract provision or requirement.

40MR-05 Extra work. Should acceptable completion of the contract require the Contractor to perform an item of work for which no basis of payment has been provided in the original contract or previously issued change orders or supplemental agreements, the same shall be called “Extra Work.” Extra Work that is within the general scope of the contract shall be covered by written change order. Change orders for such Extra Work shall contain agreed unit prices for performing the change order work in accordance with the requirements specified in the order, and shall contain any adjustment to the contract time that, in the Engineer’s opinion, is necessary for completion of such Extra Work.

40MR-06 Rights in and use of materials found in the work. Should the Contractor encounter any material such as (but not restricted to) sand, stone, gravel, slag, or concrete slabs within the established lines, grades, or grading sections, the use of which is intended by the terms of the contract to be either embankment or waste, the Contractor may at his or her option either:

a. Use such material in another contract item, providing such use is approved by the Engineer and is in conformance with the contract specifications applicable to such use; or,

b. Remove such material from the site, upon written approval of the Engineer; or

c. Use such material for the Contractor’s own temporary construction on site; or,

d. Use such material as intended by the terms of the contract.

Should the Contractor wish to exercise option a., b., or c., the Contractor shall request the Engineer’s approval in advance of such use.

Should the Engineer approve the Contractor’s request to exercise option a., b., or c., the Contractor shall be paid for the excavation or removal of such material at the applicable contract price. The Contractor shall replace, at his or her own expense, such removed or excavated material with an agreed equal volume of material that is acceptable for use in constructing embankment, backfills, or otherwise to the extent that such replacement material is needed to complete the contract work. The Contractor shall not be charged for use of such material used in the work or removed from the site.

Should the Engineer approve the Contractor's exercise of option a., the Contractor shall be paid, at the applicable contract price, for furnishing and installing such material in accordance with requirements of the contract item in which the material is used.

It is understood and agreed that the Contractor shall make no claim for delays by reason of his or her exercise of option a., b., or c.

The Contractor shall not excavate, remove, or otherwise disturb any material, structure, or part of a structure which is located outside the lines, grades, or grading sections established for the work, except where such excavation or removal is provided for in the contract, plans, or specifications.

40MR-07 Commencement of Work. Do not begin work until authorization is received from the Engineer. The schedule of availability of work areas shall be confirmed by the FAA. Complete work during standard work hours at the facility of 7:00 AM to 5:00 PM. Requests for extended work hours should be submitted in writing five days in advance, and may be granted at the discretion of the FAA.

40MR-08 Final cleanup. Upon completion of the work and before acceptance and final payment will be made, the Contractor shall remove from the site all machinery, equipment, surplus and discarded materials, rubbish, temporary structures, and stumps or portions of trees. The Contractor shall cut all brush and woods within the limits indicated and shall leave the site in a neat and presentable condition. Material cleared from the site and deposited on adjacent property will not be considered as having been disposed of satisfactorily, unless the Contractor has obtained the written permission of such property Owner.

FAA FURNISHED ITEMS

40MR-09 Equipment. The following equipment may be used at no cost to the contractor to construct the test pavement to the lines and grades indicated on the plans. The equipment will be delivered to the Contractor at the work location. FAA furnished equipment used by the Contractor shall be operated, fueled, and maintained by the Contractor, and will be returned to the FAA in the same condition in which it was delivered to the Contractor.

- CAT PS 300C pneumatic rubber tire roller.
- BOMAG MPH 364 S soil stabilizer.
- SEAMAX MODEL TO730-H-K travel mixer- soil stabilizer.

END OF SECTION 40MR

Section 50MR Control of Work

50MR-01 Roles, responsibilities, and authorities. Responsibility and authority with regard to this project shall be divided as defined in this paragraph, except as indicated in the contract or other sections of these specifications. Reporting and communication shall be organized according to Figure 1, except as indicated in the contract or other sections of these specifications.

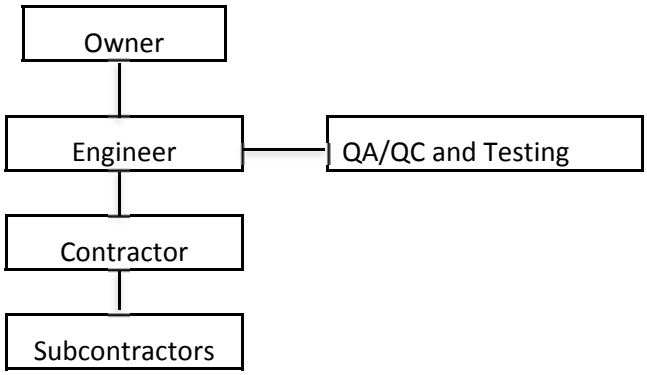

Figure 1. Project organization chart

a. **Contractor.** The contractor is responsible for completion of all aspects of the work in conformance with the plans, specifications, and contract requirements. Subcontractors to the Contractor are not recognized as parties to the contract. All communication with the Engineer must be by the Contractor. The Contractor is solely responsible for the means, methods, techniques, sequences, or procedures of construction or the safety precautions incident thereto.

b. **QA/QC and Testing.** The QA/QC and Testing staff shall advise the Contractor concerning testing, construction inspection, and acceptability of the work in such a manner to ensure conformity with the project plans and specifications.

c. **Engineer.** The Engineer shall decide any and all questions which may arise as to the quality and acceptability of materials furnished, work performed, and the manner of performance and rate of progress of the work, the interpretation of the specifications or plans relating to the work. The Engineer does not have authority to change contract requirements or accept items that do not conform to FAA specification requirements.

d. **Owner.** The Owner shall have authority to accept or reject any or all aspects of the work, interpret or otherwise answer questions concerning the plans and specifications, make changes to the plans and specifications, and make payment under the contract. The Owner shall have unfettered access to the site of the work for purposes inspection of the work or other actions necessary under the

contract. The owner shall have the authority to suspend work in whole or in part for non-conformance with plans or specifications, or for such period or periods as the Owner may deem necessary for research purposes, by verbal notification to the Contractor.

50MR-02 Conformity with plans and specifications. All work and all materials furnished shall be in reasonably close conformity with the lines, grades, grading sections, cross-sections, dimensions, material requirements, and testing requirements that are specified (including specified tolerances) in the contract, plans or specifications.

If the Engineer finds the materials furnished, work performed, or the finished product are not in reasonably close conformity with the plans and specifications and have resulted in an unacceptable finished product, the affected work or materials shall be removed and replaced or otherwise corrected by and at the expense of the Contractor in accordance with the Engineer's written orders.

For the purpose of this subsection, the term "reasonably close conformity" shall not be construed as waiving the Contractor's responsibility to complete the work in accordance with the contract, plans, and specifications. The term shall not be construed as waiving the Engineer's responsibility to insist on strict compliance with the requirements of the contract, plans, and specifications during the Contractor's execution of the work, when, in the Engineer's opinion, such compliance is essential to provide an acceptable finished portion of the work.

For the purpose of this subsection, the term "reasonably close conformity" is also intended to provide the Engineer with the authority, after consultation with the FAA, to use sound engineering judgment in his or her determinations as to acceptance of work that is not in strict conformity, but will provide a finished product equal to or better than that intended by the requirements of the contract, plans and specifications.

The Engineer will not be responsible for the Contractor's means, methods, techniques, sequences, or procedures of construction or the safety precautions incident thereto.

50MR-03 Coordination of contract, plans, and specifications. The contract, plans, specifications, and all referenced standards cited are essential parts of the contract requirements. A requirement occurring in one is as binding as though occurring in all. They are intended to be complementary and to describe and provide for a complete work. In case of discrepancy, calculated dimensions will govern over scaled dimensions; contract technical specifications shall govern over contract general provisions, plans, cited standards for materials or testing, and cited advisory circulars (ACs); contract general provisions shall govern over plans, cited standards for materials or testing, and cited ACs; plans shall govern over cited standards for materials or testing and cited ACs. If any paragraphs contained in the Special Provisions conflict with General Provisions or Technical Specifications, the Special Provisions shall govern.

From time to time, discrepancies within cited testing standards occur due to the timing of the change, edits, and/or replacement of the standards. If the Contractor discovers any apparent discrepancy within standard test methods, the Contractor shall immediately ask the Engineer for an interpretation and decision, and such decision shall be final.

50MR-04 Cooperation of Contractor. The Contractor will be supplied with two copies each of the plans and specifications. The Contractor shall have available on the work at all times one copy each of the plans and specifications.

The Contractor shall give constant attention to the work to facilitate the progress thereof, and shall cooperate with the Engineer and his or her inspectors and with other contractors in every way possible. The Contractor shall have a competent superintendent on the work at all times who is fully authorized as his or her agent on the work. The superintendent shall be capable of reading and thoroughly understanding the plans and specifications and shall receive and fulfill instructions from the Engineer or his or her authorized representative.

50MR-05 Cooperation between contractors. The Owner reserves the right to contract for and perform other or additional work on or near the work covered by this contract.

When separate contracts are let within the limits of any one project, each Contractor shall conduct the work so as not to interfere with or hinder the progress of completion of the work being performed by other Contractors. Contractors working on the same project shall cooperate with each other as directed.

Each Contractor involved shall assume all liability, financial or otherwise, in connection with his or her contract and shall protect and save harmless the Owner from any and all damages or claims that may arise because of inconvenience, delays, or loss experienced because of the presence and operations of other Contractors working within the limits of the same project.

The Contractor shall arrange his or her work and shall place and dispose of the materials being used so as not to interfere with the operations of the other Contractors within the limits of the same project. The Contractor shall join his or her work with that of the others in an acceptable manner and shall perform it in proper sequence to that of the others.

50MR-06 Construction layout and stakes. The Engineer shall establish horizontal and vertical control. The engineer will also assist the contractor with layout for the construction limits of the work. Such stakes and markings shall be preserved by the Contractor.

The Contractor will be required to furnish all lines, grades and measurements from the control points necessary for the proper execution and control of the work contracted for under these specifications.

No direct payment will be made, unless otherwise specified in contract documents, for this labor, materials, or other expenses. The cost shall be included in the price of the bid for the various items of the Contract.

50MR-07 Authority and duties of inspectors. Inspectors shall be authorized to inspect all work done and all material furnished. Such inspection may extend to all or any part of the work and to the preparation, fabrication, or manufacture of the materials to be used. Inspectors are not authorized to revoke, alter, or waive any provision of the contract. Inspectors are not authorized to issue instructions contrary to the plans and specifications or to act as foreman for the Contractor.

Inspectors are authorized to notify the Contractor or his or her representatives of any failure of the work or materials to conform to the requirements of the contract, plans, or specifications and to reject such nonconforming materials in question until such issues can be referred to the Engineer for a decision.

50MR-08 Inspection of the work. All materials and each part or detail of the work shall be subject to inspection. The Engineer shall be allowed access to all parts of the work and shall be furnished with such information and assistance by the Contractor as is required to make a complete and detailed inspection.

If the Engineer requests it, the Contractor, at any time before acceptance of the work, shall remove or uncover such portions of the finished work as may be directed. After examination, the Contractor shall restore said portions of the work to the standard required by the specifications. Should the work thus exposed or examined prove acceptable, the uncovering, or removing, and the replacing of the covering or making good of the parts removed will be paid for as extra work; but should the work so exposed or examined prove unacceptable, the uncovering, or removing, and the replacing of the covering or making good of the parts removed will be at the Contractor's expense.

Any work done or materials used without supervision or inspection by an authorized representative of the Owner may be ordered removed and replaced at the Contractor's expense unless the Owner's representative failed to inspect after having been given reasonable notice in writing that the work was to be performed.

50MR-09 Removal of unacceptable and unauthorized work. All work that does not conform to the requirements of the contract, plans, and specifications will be considered unacceptable, unless otherwise

determined acceptable by the Engineer as provided in the subsection 50MR-02 titled CONFORMITY WITH PLANS AND SPECIFICATIONS of this section.

Unacceptable work, whether the result of poor workmanship, use of defective materials, damage through carelessness, or any other cause found to exist prior to the final acceptance of the work, shall be removed immediately and replaced in an acceptable manner in accordance with these specifications.

Upon failure on the part of the Contractor to comply with any order of the Engineer made under the provisions of this subsection, the Engineer will have authority to cause unacceptable work to be remedied or removed and replaced and unauthorized work to be removed and to deduct the costs incurred by the Owner from any monies due or to become due the Contractor.

50MR-10 Maintenance during construction. The Contractor shall maintain the work during construction and until the work is accepted. Maintenance shall constitute continuous and effective work prosecuted day by day, with adequate equipment and forces so that the work is maintained in satisfactory condition at all times.

In the case of a contract for the placing of a course upon a course or subgrade previously constructed, the Contractor shall maintain the previous course or subgrade during all construction operations.

All costs of maintenance work during construction and before the project is accepted shall be included in the bid price and the Contractor will not be paid an additional amount for such work.

50MR-11 Failure to maintain the work. Should the Contractor at any time fail to maintain the work as provided in the subsection 50MR-10 titled MAINTENANCE DURING CONSTRUCTION of this section, the Engineer shall immediately notify the Contractor of such noncompliance. Such notification shall specify a reasonable time within which the Contractor shall be required to remedy such unsatisfactory maintenance condition. The time specified will give due consideration to the exigency that exists.

Should the Contractor fail to respond to the Engineer's notification, the Owner may suspend any work necessary for the Owner to correct such unsatisfactory maintenance condition, depending on the exigency that exists. Any maintenance cost incurred by the Owner, shall be deducted from monies due or to become due the Contractor.

50MR-12 Final acceptance. Upon due notice from the Contractor of presumptive completion of the entire project, the Engineer and Owner will make an inspection. If all construction provided for and contemplated by the contract is found to be complete in accordance with the contract, plans, and specifications, such inspection shall constitute the final inspection. The Engineer shall notify the Contractor in writing of final acceptance as of the date of the final inspection.

If, however, the inspection discloses any work, in whole or in part, as being unsatisfactory, the Engineer will give the Contractor the necessary instructions for correction of same and the Contractor shall immediately comply with and execute such instructions. Upon correction of the work, another inspection will be made which shall constitute the final inspection, provided the work has been satisfactorily completed. In such event, the Engineer will make the final acceptance and notify the Contractor in writing of this acceptance as of the date of final inspection.

50MR-13 Claims for adjustment and disputes. If for any reason the Contractor deems that additional compensation is due for work or materials not clearly provided for in the contract, plans, or specifications or previously authorized as extra work, the Contractor shall notify the Engineer in writing of his or her intention to claim such additional compensation before the Contractor begins the work on which the Contractor bases the claim. If such notification is not given or the Engineer is not afforded proper opportunity by the Contractor for keeping strict account of actual cost as required, then the Contractor hereby agrees to waive any claim for such additional compensation. Such notice by the Contractor and the fact that the Engineer has kept account of the cost of the work shall not in any way be construed as proving

or substantiating the validity of the claim. When the work on which the claim for additional compensation is based has been completed, the Contractor shall, within 10 calendar days, submit a written claim to the Engineer who will present it to the Owner for consideration in accordance with local laws or ordinances.

Nothing in this subsection shall be construed as a waiver of the Contractor's right to dispute final payment based on differences in measurements or computations.

END OF SECTION 50MR

Section 60MR Control of Materials

60MR-01 Source of supply and quality requirements. The materials used in the work shall conform to the requirements of the contract, plans, and specifications. Unless otherwise specified, such materials that are manufactured or processed shall be new (as compared to used or reprocessed).

In order to expedite the inspection and testing of materials, the Contractor shall furnish complete statements to the Engineer as to the origin, composition, and manufacture of all materials to be used in the work. Such statements shall be furnished promptly after execution of the contract but, in all cases, prior to delivery of such materials.

At the Engineer's option, materials may be approved at the source of supply before delivery is stated. If it is found after trial that sources of supply for previously approved materials do not produce specified products, the Contractor shall furnish materials from other sources.

60MR-02 Samples, tests, and cited specifications. Unless otherwise designated, all materials used in the work shall be inspected, tested, and approved by the Engineer before incorporation in the work. Any work in which untested materials are used without approval or written permission of the Engineer shall be performed at the Contractor's risk. Materials found to be unacceptable and unauthorized will not be paid for and, if directed by the Engineer, shall be removed at the Contractor's expense.

Unless otherwise designated, quality assurance tests in accordance with the cited standard methods of ASTM, American Association of State Highway and Transportation Officials (AASHTO), Federal Specifications, Commercial Item Descriptions, and all other cited methods, which are current on the date of advertisement for bids, will be made by and at the expense of the Engineer.

The testing organizations performing on-site quality assurance field tests shall have copies of all referenced standards on the construction site for use by all technicians and other personnel, including the Contractor's representative at his or her request. Unless otherwise designated, samples for quality assurance will be taken by a qualified representative of the Engineer. All materials being used are subject to inspection, test, or rejection at any time prior to or during incorporation into the work. Copies of all tests will be furnished to the Contractor's representative at their request after review and approval of the Engineer.

The Engineer shall provide personnel or employ a testing organization to assist with completion of all required Quality Control tests.

60MR-03 Certification of compliance. The Engineer may permit the use, prior to sampling and testing, of certain materials or assemblies when accompanied by manufacturer's certificates of compliance stating that such materials or assemblies fully comply with the requirements of the contract. The certificate shall be signed by the manufacturer. Each lot of such materials or assemblies delivered to the work must be accompanied by a certificate of compliance in which the lot is clearly identified.

Materials or assemblies used on the basis of certificates of compliance may be sampled and tested at any time and if found not to be in conformity with contract requirements will be subject to rejection whether in place or not.

The form and distribution of certificates of compliance shall be as approved by the Engineer.

When a material or assembly is specified by "brand name or equal" and the Contractor elects to furnish the specified "brand name," the Contractor shall be required to furnish the manufacturer's certificate of

compliance for each lot of such material or assembly delivered to the work. Such certificate of compliance shall clearly identify each lot delivered and shall certify as to:

a. Conformance to the specified performance, testing, quality or dimensional requirements; and,

b. Suitability of the material or assembly for the use intended in the contract work.

Should the Contractor propose to furnish an "or equal" material or assembly, the Contractor shall furnish the manufacturer's certificates of compliance as hereinbefore described for the specified brand name material or assembly. However, the Engineer shall be the sole judge as to whether the proposed "or equal" is suitable for use in the work.

The Engineer or Owner reserves the right to refuse permission for use of materials or assemblies on the basis of certificates of compliance.

60MR-04 Plant inspection. The Engineer or his or her authorized representative may inspect, at its source, any specified material or assembly to be used in the work. Manufacturing plants may be inspected from time to time for the purpose of determining compliance with specified manufacturing methods or materials to be used in the work and to obtain samples required for acceptance of the material or assembly.

Should the Engineer conduct plant inspections, the following conditions shall exist:

a. The Engineer shall have the cooperation and assistance of the Contractor and the producer with whom the Engineer has contracted for materials.

b. The Engineer shall have full entry at all reasonable times to such parts of the plant that concern the manufacture or production of the materials being furnished.

c. If required by the Engineer, the Contractor shall arrange for adequate office or working space that may be reasonably needed for conducting plant inspections. Office or working space should be conveniently located with respect to the plant.

It is understood and agreed that the Owner shall have the right to retest any material that has been tested and approved at the source of supply after it has been delivered to the site. The Engineer shall have the right to reject only material which, when retested, does not meet the requirements of the contract, plans, or specifications.

60MR-05 Storage of materials. Materials shall be so stored as to assure the preservation of their quality and fitness for the work. Stored materials, even though approved before storage, may again be inspected prior to their use in the work. Stored materials shall be located to facilitate their prompt inspection. The Contractor shall coordinate the storage of all materials with the Engineer. Unless otherwise shown on the plans, the storage of materials and the location of the Contractor's plant and parked equipment or vehicles shall be as directed by the Engineer.

All storage sites on FAA property shall be restored to their original condition by the Contractor at his or her entire expense, except as otherwise agreed to (in writing) by the FAA.

60MR-06 Unacceptable materials. Any material or assembly that does not conform to the requirements of the contract, plans, or specifications shall be considered unacceptable and shall be rejected. The Contractor shall remove any rejected material or assembly from the site of the work, unless otherwise instructed by the Engineer.

Rejected material or assembly, the defects of which have been corrected by the Contractor, shall not be returned to the site of the work until such time as the Engineer has approved its use in the work.

60MR-07 Owner furnished materials. The Contractor shall furnish all materials required to complete the work, except those specified, if any, to be furnished by the Owner. Owner-furnished materials shall be made available to the Contractor at the location specified.

All costs of handling, transportation from the specified location to the site of work, storage, and installing Owner-furnished materials shall be included in the bid for which such Owner-furnished material is used.

END OF SECTION 60MR

Section 80MR Execution and Progress

80MR-01 Subletting of contract. The Owner will not recognize any subcontractor on the work. The Contractor shall at all times when work is in progress be represented either in person, by a qualified superintendent, or by other designated, qualified representative who is duly authorized to receive and execute orders of the Engineer.

The Contractor shall provide notice to the Engineer at least 10 days prior to any subcontractor performing work on site. The Contractor shall perform, with his organization, an amount of work equal to at least 25 percent of the total contract cost.

80MR-02 Notice to proceed. The notice to proceed shall state the date on which it is expected the Contractor will begin the construction and from which date contract time will be charged. The Contractor shall begin the work to be performed under the contract within 10 days of the date set by the Engineer in the written notice to proceed, but in any event, the Contractor shall notify the Engineer at least 24 hours in advance of the time actual construction operations will begin. The Contractor shall not commence any actual construction prior to the date on which the notice to proceed is issued by the Owner.

80MR-03 Execution and progress. Unless otherwise specified, the Contractor shall submit their progress schedule for the Engineer's approval within 10 days after the effective date of the notice to proceed. The Contractor's progress schedule, when approved by the Engineer, may be used to establish major construction operations and to check on the progress of the work. The Contractor shall provide sufficient materials, equipment, and labor to guarantee the completion of the project in accordance with the plans and specifications within the time set forth in the proposal.

If the Contractor falls significantly behind the submitted schedule, the Contractor shall, upon the Engineer's request, submit a revised schedule for completion of the work within the contract time and modify their operations to provide such additional materials, equipment, and labor necessary to meet the revised schedule. Should the execution of the work be discontinued for any reason, the Contractor shall notify the Engineer at least 24 hours in advance of resuming operations.

The Contractor shall not commence any actual construction prior to the date on which the notice to proceed is issued by the Owner.

80MR-04 Character of workers, methods, and equipment. The Contractor shall, at all times, employ sufficient labor and equipment for prosecuting the work to full completion in the manner and time required by the contract, plans, and specifications.

All workers shall have sufficient skill and experience to perform properly the work assigned to them. Workers engaged in special work or skilled work shall have sufficient experience in such work and in the operation of the equipment required to perform the work satisfactorily.

Any person employed by the Contractor or by any subcontractor who violates any operational regulations or operational safety requirements and, in the opinion of the Engineer, does not perform his work in a proper and skillful manner or is intemperate or disorderly shall, at the written request of the Engineer, be removed forthwith by the Contractor or subcontractor employing such person, and shall not be employed again in any portion of the work without approval of the Engineer.

Should the Contractor fail to remove such persons or person, or fail to furnish suitable and sufficient personnel for the proper execution of the work, the Engineer may suspend the work by written notice until compliance with such orders.

All equipment that is proposed to be used on the work shall be of sufficient size and in such mechanical condition as to meet requirements of the work and to produce a satisfactory quality of work. Equipment used on any portion of the work shall be such that no injury to previously completed work, adjacent property, or existing airport facilities will result from its use.

When the methods and equipment to be used by the Contractor in accomplishing the work are not prescribed in the contract, the Contractor is free to use any methods or equipment that will accomplish the work in conformity with the requirements of the contract, plans, and specifications.

When the contract specifies the use of certain methods and equipment, such methods and equipment shall be used unless others are authorized by the Engineer. If the Contractor desires to use a method or type of equipment other than specified in the contract, the Contractor may request authority from the Engineer to do so. The request shall be in writing and shall include a full description of the methods and equipment proposed and of the reasons for desiring to make the change. If approval is given, it will be on the condition that the Contractor will be fully responsible for producing work in conformity with contract requirements. If, after trial use of the substituted methods or equipment, the Engineer determines that the work produced does not meet contract requirements, the Contractor shall discontinue the use of the substitute method or equipment and shall complete the remaining work with the specified methods and equipment. The Contractor shall remove any deficient work and replace it with work of specified quality, or take such other corrective action as the Engineer may direct. No change will be made in basis of payment for the contract items involved nor in contract time as a result of authorizing a change in methods or equipment under this subsection.

80MR-05 Temporary suspension of the work. The Owner shall have the authority to suspend the work wholly, or in part, for such period or periods as the Owner may deem necessary, due to unsuitable weather, or such other conditions as are considered unfavorable for the execution of the work, or for such time as is necessary due to the failure on the part of the Contractor to carry out orders given or perform any or all provisions of the contract.

In the event that the Contractor is ordered by the Owner, in writing, to suspend work for some unforeseen cause not otherwise provided for in the contract and over which the Contractor has no control, the Contractor may be reimbursed for actual money expended on the work during the period of shutdown. No allowance will be made for anticipated profits. The period of shutdown shall be computed from the effective date of the Engineer’s order to suspend work to the effective date of the Engineer’s order to resume the work. Claims for such compensation shall be filed with the Engineer within the time period stated in the Engineer’s order to resume work. The Contractor shall submit with his or her claim information substantiating the amount shown on the claim. The Engineer will forward the Contractor’s claim to the Owner for consideration in accordance with local laws or ordinances. No provision of this article shall be construed as entitling the Contractor to compensation for delays due to inclement weather, for suspensions made at the request of the Owner, or for any other delay provided for in the contract, plans, or specifications.

If it should become necessary to suspend work for an indefinite period, the Contractor shall store all materials in such manner that they will not become an obstruction nor become damaged in any way. The Contractor shall take every precaution to prevent damage or deterioration of the work performed and provide for normal drainage of the work.

80MR-06 Default and termination of contract. The Contractor shall be considered in default of his or her contract and such default will be considered as cause for the Owner to terminate the contract for any of the following reasons if the Contractor:

a. Fails to begin the work under the contract within the time specified in the Notice to Proceed, or

b. Fails to perform the work or fails to provide sufficient workers, equipment and/or materials to assure completion of work in accordance with the terms of the contract, or

c. Performs the work unsuitably or neglects or refuses to remove materials or to perform anew such work as may be rejected as unacceptable and unsuitable, or

d. Discontinues the execution of the work, or

e. Fails to resume work which has been discontinued within a reasonable time after notice to do so, or

f. Becomes insolvent or is declared bankrupt, or commits any act of bankruptcy or insolvency, or

g. Allows any final judgment to stand against the Contractor unsatisfied for a period of 10 days, or

h. Makes an assignment for the benefit of creditors, or

i. For any other cause whatsoever, fails to carry on the work in an acceptable manner.

Should the Engineer consider the Contractor in default of the contract for any reason above, the Engineer shall immediately give written notice to the Contractor and the Contractor's surety as to the reasons for considering the Contractor in default and the Owner's intentions to terminate the contract.

If the Contractor or surety, within a period of 10 days after such notice, does not proceed in accordance therewith, then the Owner will, upon written notification from the Engineer of the facts of such delay, neglect, or default and the Contractor's failure to comply with such notice, have full power and authority without violating the contract, to take the execution of the work out of the hands of the Contractor. The Owner may appropriate or use any or all materials and equipment that have been mobilized for use in the work and are acceptable and may enter into an agreement for the completion of said contract according to the terms and provisions thereof, or use such other methods as in the opinion of the Engineer will be required for the completion of said contract in an acceptable manner.

All costs and charges incurred by the Owner, together with the cost of completing the work under contract, will be deducted from any monies due or which may become due the Contractor. If such expense exceeds the sum which would have been payable under the contract, then the Contractor and the surety shall be liable and shall pay to the Owner the amount of such excess.

80MR-07 Termination for national emergencies. The Owner shall terminate the contract or portion thereof by written notice when the Contractor is prevented from proceeding with the construction contract as a direct result of an Executive Order of the President with respect to the execution of war or in the interest of national defense.

When the contract, or any portion thereof, is terminated before completion of all items of work in the contract, payment will be made for the actual number of units or items of work completed at the contract price or as mutually agreed for items of work partially completed or not started. No claims or loss of anticipated profits shall be considered.

Reimbursement for organization of the work, and other overhead expenses, (when not otherwise included in the contract) and moving equipment and materials to and from the job will be considered, the intent being that an equitable settlement will be made with the Contractor.

Acceptable materials, obtained or ordered by the Contractor for the work and that are not incorporated in the work shall, at the option of the Contractor, be purchased from the Contractor at actual cost as shown by receipted bills and actual cost records at such points of delivery as may be designated by the Engineer.

Termination of the contract or a portion thereof shall neither relieve the Contractor of his or her responsibilities for the completed work nor shall it relieve his or her surety of its obligation for and concerning any just claim arising out of the work performed.

END OF SECTION 80MR

Section 90MR Measurement and Payment

90MR-01 Scope of payment. The Contractor shall receive and accept compensation provided for in the contract as full payment for furnishing all materials, for performing all work under the contract in a complete and acceptable manner, and for all risk, loss, damage, or expense of whatever character arising out of the nature of the work or the execution thereof.

90MR-02 Payment for extra work. Extra work, performed in accordance with the subsection 40MR-05 titled EXTRA WORK of Section 40MR, will be paid for at the contract prices or agreed prices specified in the change order or supplemental agreement authorizing the extra work.

90MR-03 Payment for materials on hand. Partial payments may be made to the extent of the delivered cost of materials to be incorporated in the work, provided that such materials meet the requirements of the contract, plans, and specifications and are delivered to acceptable sites on the airport property or at other sites in the vicinity that are acceptable to the Owner. Such delivered costs of stored or stockpiled materials may be included in the next partial payment after the following conditions are met:

a. The material has been stored or stockpiled in a manner acceptable to the Engineer at or on an approved site.

b. The Contractor has furnished the Engineer with acceptable evidence of the quantity and quality of such stored or stockpiled materials.

c. The Contractor has furnished the Engineer with satisfactory evidence that the material and transportation costs have been paid.

d. The Contractor has furnished the Owner legal title (free of liens or encumbrances of any kind) to the material so stored or stockpiled.

e. The Contractor has furnished the Owner evidence that the material so stored or stockpiled is insured against loss by damage to or disappearance of such materials at any time prior to use in the work.

It is understood and agreed that the transfer of title and the Owner's payment for such stored or stockpiled materials shall in no way relieve the Contractor of his or her responsibility for furnishing and placing such materials in accordance with the requirements of the contract, plans, and specifications.

END OF SECTION 90MR

Item P-152MR Excavation, Subgrade, and Embankment

DESCRIPTION

152MR-01 This item covers excavation, disposal, placement, and compaction of all materials within the limits of the work required to construct safety areas, runways, taxiways, aprons, and intermediate areas as well as other areas for drainage, building construction, parking, or other purposes in accordance with these specifications and in conformity to the dimensions and typical sections shown on the plans.

152MR-02 Classification. All material excavated shall be classified as defined below:

a. Unclassified excavation. Unclassified excavation shall consist of the excavation and disposal of all material, regardless of its nature.

152MR-03 Unsuitable excavation. Any material containing vegetable or organic matter, such as muck, peat, organic silt, or sod shall be considered unsuitable for use in embankment construction. Material, suitable for topsoil may be used on the embankment slope when approved by the Engineer.

CONSTRUCTION METHODS

152MR-04 General. Before beginning excavation, grading, and embankment operations in any area, the area shall be completely cleared and grubbed as per direction of the engineer.

The suitability of material to be placed in embankments shall be subject to approval by the Engineer. All unsuitable material shall be disposed of in waste areas shown on the plans. All waste areas shall be graded to allow positive drainage of the area and of adjacent areas. The surface elevation of waste areas shall not extend above the surface elevation of adjacent usable areas of the airport, unless specified on the plans or approved by the Engineer.

Those areas outside of the limits of the pavement areas where the top layer of soil material has become compacted by hauling or other Contractor activities shall be scarified and disked to a depth of 4 inches (100 mm), to loosen and pulverize the soil.

If it is necessary to interrupt existing surface drainage, sewers or under-drainage, conduits, utilities, or similar underground structures, the Contractor shall be responsible for and shall take all necessary precautions to preserve them or provide temporary services. When such facilities are encountered, the Contractor shall notify the Engineer, who shall arrange for their removal if necessary. The Contractor, at his or her expense, shall satisfactorily repair or pay the cost of all damage to such facilities or structures that may result from any of the Contractor's operations during the period of the contract.

152MR-05 Excavation. No excavation shall be started until the work has been staked out. All areas to be excavated shall be stripped of vegetation and topsoil. Topsoil shall be stockpiled for future use in areas designated on the plans or by the Engineer. All suitable excavated material shall be used in the formation of embankment, subgrade, or other purposes shown on the plans. All unsuitable material shall be disposed of as shown on the plans.

When the volume of the excavation exceeds that required to construct the embankments to the grades indicated, the excess shall be used to grade the areas of ultimate development or disposed as directed by

the Engineer. When the volume of excavation is not sufficient for constructing the embankments to the grades indicated, the deficiency shall be obtained from borrow areas.

The grade shall be maintained so that the surface is well drained at all times. When necessary, temporary drains and drainage ditches shall be installed to intercept or divert surface water that may affect the work.

a. Removal of utilities. The removal of existing structures and utilities required to permit the orderly progress of work will be accomplished by someone other than the Contractor; for example, the utility unless otherwise shown on the plans.

b. Compaction requirements. The subgrade under areas to be paved shall be compacted to a depth of 6" and to a CBR value within 0.5 of existing conditions. The material to be compacted shall be within ±2% of optimum moisture content before being rolled to obtain the prescribed compaction (except for expansive soils).

Stones or rock fragments larger than 4 inches (100 mm) in their greatest dimension will not be permitted in the top 6 inches (150 mm) of the subgrade.

All loose or protruding rocks on the back slopes of cuts shall be pried loose or otherwise removed to the slope finished grade line. All cut-and-fill slopes shall be uniformly dressed to the slope, cross-section, and alignment shown on the plans or as directed by the Engineer.

Blasting shall not be allowed.

152MR-06 Finishing and protection of subgrade. After the subgrade is substantially complete, the Contractor shall remove any soft or other unstable material over the full width of the subgrade that will not compact properly. All low areas, holes or depressions in the subgrade shall be brought to grade with suitable select material. Scarifying, blading, rolling and other methods shall be performed to provide a thoroughly compacted subgrade shaped to the lines and grades shown on the plans.

Grading of the subgrade shall be performed so that it will drain readily. The Contractor shall protect the subgrade from damage and limit hauling over the finished subgrade to only traffic essential for construction purposes. All ruts or rough places that develop in the completed subgrade shall be graded and recompacted.

No subbase, base, or surface course shall be placed on the subgrade until the subgrade has been approved by the Engineer.

152MR-07 Haul. All hauling will be considered a necessary and incidental part of the work. The Contractor shall include the cost in the contract unit price for the pay of items of work involved. No payment will be made separately or directly for hauling on any part of the work.

152MR-08 Tolerances. In those areas upon which a subbase or base course is to be placed, the top of the subgrade shall be of such smoothness that, when surveyed in a 5' x 5' grid, it does not deviate more than 0.5 inch in the vertical direction from the target elevation. Any deviation in excess of these amounts shall be corrected by loosening, adding, or removing materials; reshaping; and recompacting.

METHOD OF MEASUREMENT

152MR-09 The quantity of excavation to be paid for shall not be measured directly and shall be considered incidental to the work items.

BASIS OF PAYMENT

152MR-10 "Unclassified excavation" payment shall be considered incidental to the work items.

Payment will be made under:

No direct payment shall be made for this item.

TESTING REQUIREMENTS

ASTM D698	Standard Test Methods for Laboratory Compaction Characteristics of Soil Using Standard Effort (12,400 ft-lbf/ft^3 (600 kN-m/m^3))
ASTM D1556	Standard Test Method for Density and Unit Weight of Soil in Place by the Sand-Cone Method
ASTM D6938	Standard Test Methods for In-Place Density and Water Content of Soil and Soil-Aggregate by Nuclear Methods (Shallow Depth)

END OF ITEM P-152MR

Item P-154MR Subbase Course

DESCRIPTION

154MR-01 This item shall consist of a subbase course composed of granular materials constructed on a prepared subgrade or underlying course in accordance with these specifications, and in conformity with the dimensions and typical cross-section shown on the plans.

MATERIALS

154MR-02 Materials. The subbase material shall consist of hard durable particles or fragments of granular aggregates. This material will be mixed or blended with fine sand, clay, stone dust, or other similar binding or filler materials produced from approved sources. This mixture must be uniform and shall comply with the requirements of these specifications as to gradation, soil constants, and shall be capable of being compacted into a dense and stable subbase. The material shall be free from vegetative matter, lumps or excessive amounts of clay, and other objectionable or foreign substances. Pit-run material may be used, provided the material meets the gradation requirements specified.

Gradation Requirements

Sieve designation (square openings) as per ASTM C136 and ASTM D422	Percentage by weight passing sieves
3 inch (75 mm)	100
No. 10 (2.0 mm)	20-100
No. 40 (0.450 mm)	5-60
No. 200 (0.075 mm)	0-15

The portion of the material passing the No. 40 (0.450 mm) sieve shall have a liquid limit of not more than 25 and a plasticity index of not more than six (6) when tested in accordance with ASTM D4318.

154MR-03 Sampling and testing. Material used on the project shall be sampled per ASTM D75 and tested per ASTM C136 and ASTM C117. Results shall be furnished to the Engineer by the Contractor prior to the start of construction activities. The Contractor shall supply samples of subbase material for verification testing and other material characterization tests. The additional testing will be completed by the NAPTF Materials Testing Lab. The Contractor shall supply approximately 250 lbs. of the subbase material in five gallon buckets with protective lids for testing. The results of the ASTM D1557 performed by the NAPTF lab will determine the target moisture and material density acceptance for project use.

CONSTRUCTION METHODS

154MR-04 General. The subbase course shall be placed where designated on the plans or as directed by the Engineer. The material shall be shaped and thoroughly compacted within the tolerances specified.

Granular subbases which, due to grain sizes or shapes, are not sufficiently stable to support the construction equipment without movement, shall be mechanically stabilized to the depth necessary to provide stability as directed by the Engineer. The mechanical stabilization shall include the addition of a fine-grained medium to bind the particles of the subbase material sufficiently to furnish a bearing strength, so the course will not deform under construction equipment traffic. The addition of the binding medium to the subbase material shall not increase the soil constants of that material above the specified limits.

154MR-05 Operation in pits. The subbase material shall be obtained from pits or sources that have been approved by the Engineer. The material in the pits shall be excavated and handled to produce a uniform and satisfactory product. All work involved in clearing and stripping pits and handling unsuitable material encountered shall be performed by the Contractor. The cost of this work is incidental to this item.

154MR-06 Preparing underlying course. Prior to constructing the subbase course, clean the underlying course or subgrade of all foreign substances. The surface of the underlying course or subgrade shall meet specified compaction and surface tolerances. Correct ruts, or soft yielding spots, in the underlying courses and subgrade areas having inadequate compaction and deviations of the surface from the specified requirements by loosening and removing soft or unsatisfactory material and by adding approved material, reshaping to line and grade, and recompacting to specified density requirements. For cohesionless underlying courses or subgrades containing sands or gravels, as defined in ASTM D2487, the surface shall be stabilized prior to placement of the overlying course. Accomplish stabilization by mixing the overlying course material into the underlying course, and compacting by approved methods. The finished underlying course shall not be disturbed by traffic or other operations and shall be maintained in a satisfactory condition until the overlying course is placed. The course shall be checked and accepted by the Engineer before placing and spreading operations are started.

To protect the subgrade and to ensure proper drainage, the spreading of the subbase shall begin along the centerline of the pavement on a crowned section or on the high side of pavements with a one-way slope.

154MR-07 Materials acceptance in existing condition. When the entire subbase material is in a uniform and satisfactory condition at approximately the required moisture content, the approved material may be moved directly to the spreading equipment for placing. The material may be obtained from gravel pits, stockpiles, or may be produced from a crushing and screening plant with proper blending. The materials from these sources shall meet the requirements for gradation, quality, and consistency. The intent of the specifications is to secure materials that will not require further mixing. The moisture content of the material shall be approximately that required to obtain maximum density. Any minor deficiency or excess in moisture content may be corrected by surface sprinkling or by aeration. Some mixing or aeration may be required prior to rolling to obtain the required moisture content. Blading or dragging, if necessary, shall be performed to obtain a smooth uniform surface true to line and grade.

154MR-08 Plant mixing. When materials from several sources will be blended and mixed, the subbase material shall be processed in a central mixing plant. The subbase material, together with any blended material, shall be thoroughly mixed with the required amount of water. After the mixing is complete, the material shall be transported to and spread on the underlying course without undue loss of moisture content.

154MR-09 General methods for placing. The subbase course shall be constructed in layers of not less than 3 inches (75 mm) nor more than 8 inches (200 mm) of compacted thickness. The subbase material shall be deposited and spread evenly to a uniform thickness and width. The material, as spread, shall be of uniform gradation with no pockets of fine or coarse materials. No material shall be placed in snow or on a soft, muddy, or frozen course.

When more than one layer is required, the construction procedure described here shall apply similarly to each layer.

During the placing and spreading, sufficient caution shall be exercised to prevent the incorporation of subgrade, shoulder, or foreign material in the subbase course mixture.

154MR-10 Finishing and compacting. After spreading or mixing, the subbase material shall be thoroughly compacted by rolling and sprinkling, when necessary. Sufficient rollers shall be furnished to adequately handle the rate of placing and spreading of the subbase course.

The field density of the compacted material shall be at least 100% of the maximum density at the target moisture of laboratory specimens prepared from samples of the subbase material delivered to the jobsite. The laboratory specimens shall be compacted and tested in accordance with ASTM D1557. The in-place field density shall be determined in accordance with ASTM D1556. The moisture content of the material at the start of compaction shall be within ±2% of the optimum moisture content. All testing shall be done by the Engineer.

The course shall not be rolled when the underlying course is soft or yielding or when the rolling causes undulation in the subbase. When the rolling develops irregularities that exceed 3/8 inch (9 mm) when tested with a 12 feet (3.7 m) straightedge, the irregular surface shall be loosened and then refilled with the same kind of material as that used in constructing the course and again rolled as required above.

Along places inaccessible to rollers, the subbase material shall be tamped thoroughly with mechanical or hand tampers.

Sprinkling during rolling, if necessary, shall be by equipment approved by the Engineer. Water shall not be added in manner or quantity that allows free water to reach the underlying layer and cause it to become soft.

154MR-11 Surface tolerance. The surface of the top layer shall show no deviations in excess of 3/8 inch (9 mm) in the vertical direction from the target elevation when surveyed in a 5’ x 5’ grid. Correct deviations exceeding this amount by removing material and replacing with new material, or by reworking existing material and compacting it to meet these specifications.

154MR-12 Thickness control. The completed thickness of the course(s) shall be in accordance with the thickness and grade indicated on the drawings. The completed course shall not be more than ½ inch (12 mm) deficient in thickness nor more than ½ inch (12 mm) above or below the established grade. Where any of these tolerances are exceeded, correct such areas by scarifying, adding new material of proper gradation or removing material, and compacting, as directed. Where the measured thickness is ½ inch (12 mm) or more thicker than shown, the course will be considered as conforming with the specified thickness requirements plus ½ inch (12 mm). The average job thickness shall be the average of the job measurements as specified above but within ¼ inch (6 mm) of the thickness shown. The thickness of the completed subbase course shall be determined by survey.

154MR-13 Protection. Work on subbase course shall not be conducted during freezing temperatures nor when the subgrade is wet. When the subbase material contains frozen material or when the underlying course is frozen, the construction shall be stopped. The Contractor shall protect and maintain the subgrade from yielding until the subbase is accepted.

154MR-14 Maintenance. The Contractor shall maintain the completed course in a satisfactory condition until accepted by the Engineer.

METHOD OF MEASUREMENT

154MR-15 Subbase course to be paid for shall not be measured directly and shall be considered incidental to the work items.

BASIS OF PAYMENT

154MR-16 Payment shall be considered incidental to the work items.

Payment will be made under:

No direct payment shall be made for this item.

TESTING REQUIREMENTS

ASTM C117	Standard Test Method for Materials Finer Than 75-µm (No. 200) Sieve in Mineral Aggregates by Washing
ASTM C136	Standard Test Method for Sieve or Screen Analysis of Fine and Coarse Aggregates
ASTM D75	Standard Practice for Sampling Aggregates
ASTM D422	Standard Test Method for Particle-Size Analysis of Soils
ASTM D698	Standard Test Methods for Laboratory Compaction Characteristics of Soil Using Standard Effort (12,400 ft-lbf/ft^3 (600 kN-m/m^3))
ASTM D1556	Standard Test Method for Density and Unit Weight of Soil in Place by the Sand-Cone Method
ASTM D2487	Standard Practice for Classification of Soils for Engineering Purposes (Unified Soil Classification System)
ASTM D4318	Standard Test Methods for Liquid Limit, Plastic Limit, and Plasticity Index of Soils
ASTM D6938	Standard Test Method for In-Place Density and Water Content of Soil and Soil-Aggregate by Nuclear Methods (Shallow Depth)

END OF ITEM P-154MR

Item P-209MR Crushed Aggregate Base Course

DESCRIPTION

209MR-01 This item consists of a base course composed of crushed aggregate base constructed on a prepared course in accordance with these specifications and in conformity to the dimensions and typical cross-sections shown on the plans.

MATERIALS

209MR-02 Crushed aggregate base. Crushed aggregate shall consist of clean, sound, durable particles of crushed stone or crushed gravel and shall be free from coatings of clay, silt, organic material, or other objectionable materials. Aggregates shall contain no clay lumps or balls. Fine aggregate passing the No. 4 (4.75 mm) sieve shall consist of fines from the coarse aggregate crushing operation. If necessary, fine aggregate may be added to produce the correct gradation. The fine aggregate shall be produced by crushing stone or gravel that meet the coarse aggregate requirements for wear and soundness.

The coarse aggregate portion, defined as the material retained on the No. 4 (4.75 mm) sieve, shall not have a loss of greater than 45% when tested per ASTM C131. The sodium sulfate soundness loss shall not exceed 12%, or the magnesium sulfate soundness loss shall not exceed 18%, after five cycles, when tested in accordance with ASTM C88. The aggregate shall contain no more than 15%, by weight, of flat, elongated, or flat and elongated particles per ASTM D4791. A flat particle is one having a ratio of width to thickness greater than 3; an elongated particle is one having a ratio of length to width greater than three (3). The aggregate shall have at least 90% by weight of particles with at least two fractured faces and 100% with at least one fractured face per ASTM D5821. The area of each face shall be equal to at least 75% of the smallest mid-sectional area of the piece. When two fractured faces are contiguous, the angle between the planes of fractures shall be at least 30 degrees to count as two fractured faces.

a. Sampling and testing for initial aggregate base requirements. Samples shall be taken by the Contractor in the presence of the Engineer. Material shall meet the requirements in paragraph 209MR-02 and 209MR-03. This sampling and testing will be the basis for approval of the aggregate base quality requirements.

209MR-03 Gradation requirements. The gradation of the aggregate base material shall meet the requirements of the gradation given in the following table when tested per ASTM C117 and ASTM C136. The gradation shall be well graded from coarse to fine as defined by ASTM D2487 and shall not vary from the lower limit on one sieve to the high limit on an adjacent sieve or vice versa. The fraction of material passing the No. 200 (0.075 mm) sieve shall not exceed one-half the fraction passing the No. 40 (0.45 mm) sieve.

Requirements For Gradation Of Aggregate Base

Sieve Size	Design Range Percentage by Weight	Contractor's Final Gradation	Job Control Grading Band Tolerances for Contractor's Final Gradation Percent
2 inch (50 mm)	100		0

Sieve Size	Design Range Percentage by Weight	Contractor's Final Gradation	Job Control Grading Band Tolerances for Contractor's Final Gradation Percent
1-1/2 inch (38 mm)	95-100		±5
1 inch (25 mm)	70-95		±8
3/4 inch (19 mm)	55-85		±8
No. 4 (4.75 mm)	30-60		±8
No. 40 (0.45 mm)	10-30		±5
No. 200 (0.075 mm)	0-8		±3

The "Job Control Grading Band Tolerances for Contractor's Final Gradation" in the table shall be applied to "Contractor's Final Gradation" to establish a job control grading band. The full tolerance still applies if application of the tolerances results in a job control grading band outside the design range.

a. Sampling and testing for gradation. Gradation tests shall be performed by the Engineer per ASTM C136 and sieve analysis on material passing the No. 200 sieve (75 mm) per ASTM C117. The Engineer shall take at least 1 aggregate base sample per lot to check the final gradation. Sampling shall be per ASTM D75. The lot will be consistent with the lot size used for density. The samples shall be taken from the in-place, un-compacted material in the presence of the Engineer. Sampling points and intervals will be designated by the Engineer.

CONSTRUCTION METHODS

209MR-04 Preparing underlying subgrade and/or subbase. The underlying subgrade and/or subbase shall be checked and accepted by the Engineer before base course placing and spreading operations begin. Any ruts or soft, yielding areas due to improper drainage conditions, hauling, or any other cause, shall be corrected before the base course is placed. To ensure proper drainage, the spreading of the base shall begin along the centerline of the pavement on a crowned section or on the high side of the pavement with a one-way slope.

209MR-05 Production. The aggregate shall be uniformly blended and, when at a satisfactory moisture content per paragraph 209MR-07, the approved material may be transported directly to the spreading equipment.

209MR-06 Placing. The aggregate base material shall be placed on the prepared underlying subgrade and/or subbase and compacted in layers to the thickness shown on the plans. Work shall progress without interruption. The material shall be deposited and spread in lanes in a uniform layer without segregation to such loose depth that, when compacted, the layer shall have the specified thickness. The aggregate base course shall be constructed in layers of uniform thickness of not less than 3 inches (75 mm) nor more than 6 inches (150 mm) of compacted thickness. The aggregate as spread shall be of uniform grading with no pockets of fine or coarse materials. Care shall be taken to prevent cutting into the underlying layer during spreading. No material shall be placed in snow or on a soft, muddy, or frozen course. Hauling over the uncompacted base course shall not be permitted.

209MR-07 Compaction. Immediately after completion of the spreading operations, compact each layer of the base course, as specified, with approved compaction equipment. The number, type, and weight of rollers shall be sufficient to compact the material to the required density within the same day that the aggregate is

placed on the subgrade. The moisture content of the material during placing operations shall be within ±2 percentage points of the optimum moisture content.

209MR-08 Acceptance sampling and testing for density. Aggregate base course shall be accepted for density on a lot basis. Each shoulder area will represent a lot for a total of (4) lots. CSRA shall perform all density testing in the NAPTF Lab.

Each lot shall be divided into two equal sublots. One test shall be made for each sublot and shall consist of the average of two random locations for density determination. Sampling locations will be determined by the Engineer on a random basis per ASTM D3665.

Each lot will be accepted for density when the field density is at least 95% of the maximum density at the target moisture of laboratory specimens prepared from samples of the subbase material delivered to the jobsite. The specimens shall be compacted and tested per ASTM D-1557. The in-place field density shall be determined per ASTM D1556. Test in accordance with ASTM D4718 if greater than 30% is retained on the 3/4 inch sieve. If the specified density is not attained, the entire lot shall be reworked and/or recompacted and two additional random tests made at the Contractor's expense. This procedure shall be followed until the specified density is reached.

209MR-09 Surface tolerances. After the course has been compacted, the surface shall be tested for smoothness and accuracy of grade. Any portion lacking the required smoothness or failing in accuracy of grade shall be scarified to a depth of at least 3 inches (75 mm), reshaped and recompacted to grade until the required smoothness and accuracy are obtained and approved by the Engineer. Any deviation in surface tolerances shall be corrected by the Contractor at the Contractor's expense. The smoothness and accuracy requirements specified here apply only to the top layer when base course is constructed in more than one layer.

a. Smoothness. The finished surface shall not vary more than 3/8 inch (9 mm) when surveyed in a 5' x 5' grid. If the area is smaller than 5' x 5', points should be taken every 5' on each side of the shoulder area.

b. Accuracy. The grade shall be within +0 and -1/2 inch (12 mm) of the specified grade when surveyed in a 5' x 5' grid. If the area is smaller than 5' x 5', points should be taken every 5' on each side of the shoulder area.

209MR-10 Thickness control. The thickness of the base course shall be within +0 and -1/2 inch (12 mm) of the specified thickness as determined by depth tests taken by the Contractor in the presence of the Engineer. Tests shall be taken at intervals representing no more than 1 lot per test. Sampling locations will be determined by the Engineer per ASTM D3665. Where the thickness is deficient by more than 1/2 inch (12 mm), the Contractor shall correct such areas at no additional cost by scarifying to a depth of at least 3 inches (75 mm), adding new material of proper gradation, and the material shall be blended and recompacted to grade. Additional test holes may be required to identify the limits of deficient areas. The Contractor shall replace, at his expense, base material where depth tests have been taken.

209MR-11 Protection. Perform construction when the atmospheric temperature is above 35°F (2°C). When the temperature falls below 35°F (2°C), protect all completed areas by approved methods against detrimental effects of freezing. Correct completed areas damaged by freezing, rainfall, or other weather conditions to meet specified requirements. When the aggregates contain frozen materials or when the underlying course is frozen or wet, the construction shall be stopped. Hauling equipment may be routed over completed portions of the base course, provided no damage results. Equipment shall be routed over the full width of the base course to avoid rutting or uneven compaction. The Engineer will stop all hauling over completed or partially completed base course when, in the Engineer's opinion, such hauling is causing damage. Any damage to the base course shall be repaired by the Contractor at the Contractor's expense.

209MR-12 Maintenance. The Contractor shall maintain the base course in a satisfactory condition until the full pavement section is completed and accepted by the Engineer.

METHOD OF MEASUREMENT

209MR-13 Crushed Aggregate Base Course to be paid for shall not be measured directly and shall be considered incidental to the work items.

BASIS OF PAYMENT

209MR-14 Payment shall be considered incidental to the work items.

Payment will be made under:

No direct payment shall be made for this item.

TESTING REQUIREMENTS

ASTM C29	Standard Test Method for Bulk Density ("Unit Weight") and Voids in Aggregate
ASTM C88	Standard Test Method for Soundness of Aggregates by Use of Sodium Sulfate or Magnesium Sulfate
ASTM C117	Standard Test Method for Materials Finer than 75-µm (No. 200) Sieve in Mineral Aggregates by Washing
ASTM C131	Standard Test Method for Resistance to Degradation of Small-Size Coarse Aggregate by Abrasion and Impact in the Los Angeles Machine
ASTM C136	Standard Test Method for Sieve or Screen Analysis of Fine and Coarse Aggregates
ASTM D75	Standard Practice for Sampling Aggregates
ASTM D422	Standard Test Method for Particle-Size Analysis of Soils
ASTM D698	Standard Test Methods for Laboratory Compaction Characteristics of Soil Using Standard Effort (12,400 ft-lbf/ft^3 (600 kN-m/m^3))
ASTM D1556	Standard Test Method for Density and Unit Weight of Soil in Place by the Sand-Cone Method
ASTM D1557	Standard Test Methods for Laboratory Compaction Characteristics of Soil Using Modified Effort (56,000 ft-lbf/ft^3 (2700 kN-m/m^3))
ASTM D2167	Standard Test Method for Density and Unit Weight of Soil in Place by the Rubber Balloon Method
ASTM D2419	Standard Test Method for Sand Equivalent Value of Soils and Fine Aggregate
ASTM D3665	Standard Practice for Random Sampling of Construction Materials
ASTM D4718	Standard Practice for Correction of Unit Weight and Water Content for Soils Containing Oversize Particles
ASTM D4791	Standard Test Method for Flat Particles, Elongated Particles, or Flat and Elongated Particles in Coarse Aggregate

ASTM D5821	Standard Test Method for Determining the Percentage of Fractured Particles in Coarse Aggregate
ASTM D6938	Standard Test Method for In-Place Density and Water Content of Soil and Soil-Aggregate by Nuclear Methods (Shallow Depth)

END OF ITEM P-209

Item P-401MR Hot Mix Apshalt (HMA) Pavements

DESCRIPTION

401MR-01 This specification covers material requirements for producing and placing HMA mixtures to be placed at the Outdoor Reflective Cracking test area. The mixture shall conform to the FAA P-401 specification (FAA AC 150/5370-10G) or as otherwise noted in this modification to the specification.

MATERIALS

401MR-02 Aggregate. Aggregates shall consist of crushed stone, crushed gravel, or crushed slag with or without natural sand or other inert finely divided mineral aggregate. The portion of combined materials retained on the No. 4 (4.75 mm) sieve is coarse aggregate. The portion of combined materials passing the No. 4 (4.75 mm) sieve and retained on the No. 200 (0.075 mm) sieve is fine aggregate, and the portion passing the No. 200 (0.075 mm) sieve is mineral filler. All material excavated shall be classified as defined below:

a. Coarse Aggregate. Coarse aggregate shall consist of sound, tough, durable particles, free from adherent films of matter that would prevent thorough coating and bonding with the bituminous material and be free from organic matter and other deleterious substances. The percentage of wear shall not be greater than 40 percent when tested in accordance with ASTM C 131. The sodium sulfate soundness loss shall not exceed 10 percent, or the magnesium sulfate soundness loss shall not exceed 13 percent, after five cycles, when tested in accordance with ASTM C 88. Aggregate shall contain at least 50 percent by weight of individual pieces having two or more fractured faces and 65 percent by weight having at least one fractured face. The area of each face shall be equal to at least 75 percent of the smallest midsectional area of the piece. When two fractured faces are contiguous, the angle between the planes of fractures shall be at least 30 degrees to count as two fractured faces. Fractured faces shall be obtained by crushing. The aggregate shall not contain more than a total of 8 percent, by weight, of flat particles, elongated particles, and flat and elongated particles, when tested in accordance with ASTM D 4791 with a value of 5:1.

b. Fine Aggregate. Fine aggregate shall consist of clean, sound, durable, angular shaped particles produced by crushing stone, slag, or gravel that meets the requirements for wear and soundness specified for coarse aggregate. The aggregate particles shall be free from coatings of clay, silt, or other objectionable matter and shall contain no clay balls. The fine aggregate, including any blended material for the fine aggregate, shall have a plasticity index of not more than 6 and a liquid limit of not more than 25 when tested in accordance with ASTM D 4318. Natural (nonmanufactured) sand may be used to obtain the gradation of the aggregate blend or to improve the workability of the mix. The amount of sand to be added will be adjusted to produce mixtures conforming to requirements of this specification. The fine aggregate shall not contain more than 15 percent natural sand by weight of total aggregates. If used, the natural sand shall meet the requirements of ASTM D 1073 and shall have a plasticity index of not more than 6 and a liquid limit of not more than 25 when tested in accordance with ASTM D 4318. The aggregate shall have sand equivalent values of 45 or greater when tested in accordance with ASTM D 2419.

c. Sampling. ASTM D 75 shall be used in sampling coarse and fine aggregate, and ASTM C 183 shall be used in sampling mineral filler.

401MR-03 Bituminous Material. Bituminous material shall conform to the following requirements.

Asphalt cement binder shall conform to AASHTO M320 Performance Grade (PG) with a PG of 64 -22. Test data indicating grade certification shall be provided by the supplier at the time of delivery of each load to the mix plant. The FAA Materials Laboratory may request samples for testing, prior to and during production, to verify the quality of the materials and to ensure conformance with the applicable specifications.

401MR-04 Job Mix Formula. No bituminous mixture for payment shall be produced until a job mix formula has been approved in writing by the Engineer.

Tensile Strength Ratio (TSR) of the composite mixture, as determined by ASTM D 4867, shall not be less than 75. Anti-stripping agent shall be added to the asphalt, as necessary, to produce a TSR of not less than 75.

The HMA mixture shall be designed in accordance with AASHTO R35, *Standard Practice for Superpave Volumetric Design for Hot Mix Asphalt*, and tested in accordance with AASHTO T-312, *Preparing and Determining the Density of Hot Mix Asphalt specimens by means of the Superpave Gyratory Compactor,* except as noted herein. Seventy-five gyrations (N_{design}= 75) shall be required for gyratory compaction (NO N_{ini} or N_{max} testing are required). The plant produced HMA mixture shall meet the following volumetric and performance requirements:

Table 1 Volumetric and Performance Requirements

Density (% of Bulk Sp. Gr.)	Asphalt Content (AC), %	Air Void (Va), %	Voids in Mineral Aggregate (VMA), %
96 - 100	5.0 – 7.5	3 – 4	$\geq$ 15

The contractor shall submit JMF at least 30 days prior to the start of paving operations. The JMF shall be developed within the same construction season using aggregates currently being produced. The submitted JMF shall include the following items as a minimum:

1. Sieve analysis results for total combined gradation, individual gradation of all aggregate stockpiles and percent by weight of each stockpile used in the JMF.
2. Asphalt content.
3. Asphalt performance grade and type of modifier if used.
4. Number of gyrations.
5. Mixing temperature.
6. Compaction temperature.
7. Temperature-viscosity relationship of the PG asphalt binder showing acceptable range of mixing and compaction temperatures; and for modified binders include supplier recommended mixing and compaction temperatures.
8. Plot of the combined gradation on 0.45 power gradation curve
9. Graphical plots of air voids, voids in the mineral aggregate, and unit weight versus asphalt content.
10. Specific Gravity and absorption of each aggregate.
11. Percent natural sand.
12. Percent fractured faces
13. Percent by weight of flat particles, elongated particles (and criteria)
14. Date the JMF was developed. Mix designs that are not attached dated or which are from a prior construction season shall not be accepted

The Contractor shall submit to the Engineer the results of verification testing of three (3) asphalt samples prepared at the optimum asphalt content. The average of the results of this testing shall indicate conformance with the job mix formula requirements specified in Tables 1. When the project requires asphalt mixtures of differing aggregate gradations, a separate job mix formula and the results of job mix formula verification testing must be submitted for each mix. The job mix formula for each mixture shall be in effect until a modification is approved in writing by the Engineer. Should a change in sources of materials be made, a new job mix formula must be submitted within 10 days and approved by the Engineer in writing before the new material is used. After the initial production job mix formula has been approved by the Engineer and a new or modified job mix formula is required for whatever reason, the subsequent cost of the Engineer's approval of the new or modified job mix formula will be borne by the Contractor.

The mineral aggregate shall be of such size that the percentage composition by weight, as determined by laboratory sieves, will conform to the gradation or gradations specified in Table 3 when tested in accordance with ASTM C 136 and C 117. The gradations in Table 2 represent the limits that shall determine the suitability of aggregate for use from the sources of supply. The aggregate, as selected (and used in the JMF), shall have a gradation within the limits designated in Table 2 and shall not vary from the low limit on one sieve to the high limit on the adjacent sieve, or vice versa, but shall be well graded from coarse to fine. The maximum size aggregate used shall not be more than one-half of the thickness of the course being constructed except where otherwise shown on the plans or ordered by the Engineer.

Table 2 Aggregate Requirements

Sieve Size	Percent Passing
¾ in. (19 mm)	100
½ in. (12 mm)	79 - 99
⅜ in. (9.5 mm)	68 - 88
No. 4 (4.75 mm)	48 - 68
No. 8 (2.36 mm)	33 - 53
No. 16 (1.18 mm)	20 - 40
No. 30 (0.600 mm)	14 - 30
No. 50 (0.300 mm)	9 - 21
No. 100 (0.150 mm)	6 - 16
No. 200 (0.075 mm)	3 - 6

The aggregate gradations shown are based on aggregates of uniform specific gravity. The percentages passing the various sieves shall be corrected when aggregates of varying specific gravities are used.

401MR-05 Test Section. Prior to full production, the Contractor shall prepare and place a quantity of bituminous mixture according to the job mix formula.

The amount of HMA shall be sufficient to construct dual test sections 60-ft long and 15-ft wide, and shall be of the same thickness specified for the job site. The equipment used in construction of the test section shall be the same type and weight to be used at the job site. The test strip shall be considered acceptable if aggregate gradation, asphalt content, air voids, VMA, and density are within the limits specified in the JMF.

401MR-06 Acceptance Test. Prior to delivery of materials to the job site, the Contractor shall submit certified test reports to the Engineer for the following materials:

a. Coarse Aggregate.

1. Percent of wear.
2. Soundness.
3. Unit weight of slag.
4. Percent fractured faces.

b. Fine Aggregate.

1. Liquid limit.
2. (2) Plasticity index.
3. (3) Sand equivalent.

c. Bituminous Material. Test results for bituminous material shall include temperature/viscosity charts for mixing and compaction temperatures.

The certifications shall show the appropriate ASTM tests for each material, the test results, and a statement that the material meets the specification requirement. The FAA Materials Laboratory may request samples for testing, prior to and during production, to verify the quality of the materials and to ensure conformance with the applicable specifications.

CONSTRUCTION METHODS

401MR-07 Hauling Equipment. Trucks used for hauling bituminous mixtures shall have tight, clean, and smooth metal beds. To prevent the mixture from adhering to them, the truck beds shall be lightly coated with a minimum amount of paraffin oil, lime solution, or other approved material. Petroleum products shall not be used for coating truck beds. Each truck shall have a suitable cover to protect the mixture from adverse weather. When necessary, to ensure that the mixture will be delivered to the site at the specified temperature, truck beds shall be insulated or heated and covers shall be securely fastened.

401MR-08 Bituminous Pavers. Bituminous pavers shall be self-propelled with an activated heated screed, capable of spreading and finishing courses of bituminous plant mix material that will meet the specified thickness, smoothness, and grade. The paver shall have sufficient power to propel itself and the hauling equipment without adversely affecting the finished surface.

The paver shall have a receiving hopper of sufficient capacity to permit a uniform spreading operation. The hopper shall be equipped with a distribution system to place the mixture uniformly in front of the screed without segregation. The screed shall effectively produce a finished surface of the required evenness and texture without tearing, shoving, or gouging the mixture.

The paver shall be equipped with a control system capable of automatically maintaining the specified screed elevation. The control system shall be automatically actuated from either a reference line and/or through a system of mechanical sensors or sensor-directed mechanisms or devices that will maintain the paver screed at a predetermined transverse slope and at the proper elevation to obtain the required surface. The transverse

slope controller shall be capable of maintaining the screed at the desired slope within plus or minus 0.1 percent.

401MR-09 Rollers. Rollers of the vibratory, steel wheel, and pneumatic-tired type shall be used. They shall be in good condition, capable of operating at slow speeds to avoid displacement of the bituminous mixture. The number, type, and weight of rollers shall be sufficient to compact the mixture to the required density while it is still in a workable condition.

All rollers shall be specifically designed and suitable for compacting hot mix bituminous concrete and shall be properly used. Rollers that impair the stability of any layer of a pavement structure or underlying soils shall not be used. Depressions in pavement surfaces caused by rollers shall be repaired by the Contractor at its own expense. The use of equipment that causes crushing of the aggregate will not be permitted.

a. Nuclear Densometer. The Contractor shall have on site a nuclear densometer during all paving operations in order to assist in the determination of the optimum rolling pattern, type of roller and frequencies, as well as to monitor the effect of the rolling operations during production paving. The Contractor shall also supply a qualified technician during all paving operations to calibrate the nuclear densometer and obtain accurate density readings for all new bituminous concrete. These densities shall be supplied to the Engineer upon request at any time during construction. No separate payment will be made for supplying the density gauge and technician.

401MR-10 Preparation of Bituminous Material. The bituminous material shall be heated in a manner that will avoid local overheating and provide a continuous supply of the bituminous material to the mixer at a uniform temperature. The temperature of the bituminous material delivered to the mixer shall be sufficient to provide a suitable viscosity for adequate coating of the aggregate particles, but shall not exceed 325 °F (160 °C), unless otherwise required by the manufacturer.

401MR-11 Preparation of Mineral Aggregate. The aggregate for the mixture shall be heated and dried prior to introduction into the mixer. The maximum temperature and rate of heating shall be such that no damage occurs to the aggregates. The temperature of the aggregate and mineral filler shall not exceed 350 °F (175 °C) when the asphalt is added. Particular care shall be taken that aggregates high in calcium or magnesium content are not damaged by overheating. The temperature shall not be lower than is required to obtain complete coating and uniform distribution on the aggregate particles and to provide a mixture of satisfactory workability.

401MR-12 Preparation of Bituminous Mixture. The aggregates and the bituminous material shall be weighed or metered and introduced into the mixer in the amount specified by the job mix formula.

The combined materials shall be mixed until the aggregate obtains a uniform coating of bitumen and is thoroughly distributed throughout the mixture. Wet mixing time shall be the shortest time that will produce a satisfactory mixture, but not less than 25 seconds for batch plants. The wet mixing time for all plants shall be established by the Contractor, based on the procedure for determining the percentage of coated particles described in ASTM D 2489, for each individual plant and for each type of aggregate used. The wet mixing time will be set to achieve 95 percent of coated particles. For continuous mix plants, the minimum mixing time shall be determined by dividing the weight of its contents at operating level by the weight of the mixture delivered per second by the mixer. The moisture content of all bituminous mixtures upon discharge shall not exceed 0.5 percent.

401MR-13 Preparation of Underlaying Surface. Immediately before placing the bituminous mixture, the underlying concrete slabs shall be cleaned of all dust and debris. A straight asphalt tack coat of PG 64-22 shall be applied at an application rate of 0.04-0.06 gal/yd^2.

401MR-14 Laydown Plan, Transporting, Placing and Finishing. Prior to the placement of the bituminous mixture, the Contractor shall prepare a laydown plan for approval by the Engineer. The laydown

plan shall include the sequence of paving laydown by stations, width of lanes, temporary ramp locations, and laydown temperature. The laydown plan shall also include estimated time of completion for each portion of the work (that is, milling, paving, rolling, cooling, etc.). Modifications to the laydown plan shall be approved by the Engineer.

Deliveries shall be scheduled so that placing and compacting of mixture is uniform with minimum stopping and starting of the paver. Hauling over freshly placed material shall not be permitted until the material has been compacted, as specified, and allowed to cool to atmospheric temperature.

The initial placement and compaction of the mixture shall occur at a temperature suitable for obtaining density, surface smoothness, and other specified requirements but not less than 250 °F (121 °C).

Upon arrival, the mixture shall be placed to the full width by a bituminous paver. It shall be struck off in a uniform layer of such depth that, when the work is completed, it shall have the required thickness and conform to the grade and contour indicated. The speed of the paver shall be regulated to eliminate pulling and tearing of the bituminous mat.

401MR-15 Compaction of Mixture. After placing, the mixture shall be thoroughly and uniformly compacted by power rollers. The surface shall be compacted as soon as possible when the mixture has attained sufficient stability so that the rolling does not cause undue displacement, cracking or shoving. The sequence of rolling operations and the type of rollers used shall be at the discretion of the Contractor. The speed of the roller shall, at all times, be sufficiently slow to avoid displacement of the hot mixture and be effective in compaction. Any displacement occurring as a result of reversing the direction of the roller, or from any other cause, shall be corrected at once.

Sufficient rollers shall be furnished to handle the output of the plant. Rolling shall continue until the surface is of uniform texture, true to grade and cross section, and the required field density is obtained. To prevent adhesion of the mixture to the roller, the wheels shall be equipped with a scraper and kept properly moistened but excessive water will not be permitted.

ACCEPTANCE CRITERIA

401MR-16 Material to be accepted based upon the following criteria:

a. Mat Density. Acceptance of placed material for mat density shall be based on the limits in Table 1. The density shall be measured at a minimum of 2 locations per slab for a grand total of 24 locations.

b. Thickness. Thickness of each lift of shall be evaluated for compliance to the requirements shown on the plans. Measurements of thickness shall be made using the cores extracted from the paving area identified by the engineer. The maximum allowable deficiency at any point shall not be more than ¼ in less than the thickness indicated for the lift. Average thickness of lift, or combined lifts, shall not be less than the indicated thickness.

METHOD OF MEASUREMENT

401MR-17 The quantity of excavation to be paid for shall not be measured directly and shall be considered incidental to the work items.

BASIS OF PAYMENT

401MR-18 Payment for this item shall be considered incidental to the work items.

Payment will be made under:

No direct payment shall be made for this item.

TESTING REQUIREMENTS

ASTM C29	Standard Test Method for Bulk Density ("Unit Weight") and Voids in Aggregate
ASTM C88	Standard Test Method for Soundness of Aggregates by Use of Sodium Sulfate or Magnesium Sulfate
ASTM C117	Standard Test Method for Materials Finer than 75-µm (No. 200) Sieve in Mineral Aggregates by Washing
ASTM C127	Standard Test Method for Density, Relative Density (Specific Gravity) and Absorption of Coarse Aggregate
ASTM C131	Standard Test Method for Resistance to Degradation of Small-Size Coarse Aggregate by Abrasion and Impact in the Los Angeles Machine
ASTM C136	Standard Test Method for Sieve or Screen Analysis of Fine and Coarse Aggregates
ASTM C183	Standard Practice for Sampling and the Amount of Testing of Hydraulic Cement
ASTM C566	Standard Test Method for Total Evaporable Moisture Content of Aggregate by Drying
ASTM D75	Standard Practice for Sampling Aggregates
ASTM D979	Standard Practice for Sampling Bituminous Paving Mixtures
ASTM D1073	Standard Specification for Fine Aggregate for Bituminous Paving Mixtures
ASTM D2172	Standard Test Method for Quantitative Extraction of Bitumen from Bituminous Paving Mixtures
ASTM D1461	Standard Test Method for Moisture or Volatile Distillates in Bituminous Paving Mixtures
ASTM D2041	Standard Test Method for Theoretical Maximum Specific Gravity and Density of Bituminous Paving Mixtures
ASTM D2419	Standard Test Method for Sand Equivalent Value of Soils and Fine Aggregate
ASTM D2489	Standard Practice for Estimating Degree of Particle Coating of Bituminous-Aggregate Mixtures
ASTM D2726	Standard Test Method for Bulk Specific Gravity and Density of Non-Absorptive Compacted Bituminous Mixtures
ASTM D2950	Standard Test Method for Density of Bituminous Concrete in Place by Nuclear Methods
ASTM D3203	Standard Test Method for Percent Air Voids in Compacted Dense and Open Bituminous Paving Mixtures
ASTM D3665	Standard Practice for Random Sampling of Construction Materials

ASTM D3666	Standard Specification for Minimum Requirements for Agencies Testing and Inspecting Road and Paving Materials
ASTM D4318	Standard Test Methods for Liquid Limit, Plastic Limit, and Plasticity Index of Soils
ASTM D4791	Standard Test Method for Flat Particles, Elongated Particles, or Flat and Elongated Particles in Coarse Aggregate
ASTM D4867	Standard Test Method for Effect of Moisture on Asphalt Concrete Paving Mixtures
ASTM D5444	Standard Test Method for Mechanical Size Analysis of Extracted Aggregate
ASTM D6084	Standard Test Method for Elastic Recovery of Bituminous Materials by Ductilometer
ASTM D6307	Standard Test Method for Asphalt Content of Hot Mix Asphalt by Ignition Method
ASTM D6752	Standard Test Method for Bulk Specific Gravity and Density of Compacted Bituminous Mixtures Using Automatic Vacuum Sealing Method
ASTM D6926	Standard Practice for Preparation of Bituminous Specimens Using Marshall Apparatus
ASTM D6927	Standard Test Method for Marshall Stability and Flow of Bituminous Mixtures
ASTM E11	Standard Specification for Woven Wire Test Sieve Cloth and Test Sieves
ASTM E178	Standard Practice for Dealing with Outlying Observations
ASTM E1274	Standard Test Method for Measuring Pavement Roughness Using a Profilograph
AASHTO T030	Standard Method of Test for Mechanical Analysis of Extracted Aggregate
AASHTO T110	Standard Method of Test for Moisture or Volatile Distillates in Hot Mix Asphalt (HMA)
AASHTO T275	Standard Method of Test for Bulk Specific Gravity (Gmb) of Compacted Hot Mix Asphalt (HMA) Using Paraffin-Coated Specimens
AASHTO M156	Standard Specification for Requirements for Mixing Plants for Hot-Mixed, Hot-Laid Bituminous Paving Mixtures.
AASHTO T329	Standard Method of Test for Moisture Content of Hot Mix Asphalt (HMA) by Oven Method
Asphalt Institute Handbook MS-26,	Asphalt Binder
Asphalt Institute MS-2	Mix Design Manual, 7th Edition

MATERIAL REQUIREMENTS

ASTM D242	Standard Specification for Mineral Filler for Bituminous Paving Mixtures
ASTM D946	Standard Specification for Penetration-Graded Asphalt Cement for Use in Pavement Construction

ASTM D3381	Standard Specification for Viscosity-Graded Asphalt Cement for Use in Pavement Construction
ASTM D4552	Standard Practice for Classifying Hot-Mix Recycling Agents
ASTM D6373	Standard Specification for Performance Graded Asphalt Binder

END OF ITEM P-401MR

Item P-403 Hot Mix Asphalt (HMA) Pavements (Base, Leveling or Surface Course)

DESCRIPTION

403-1.1 This item shall consist of a **surface** course composed of mineral aggregate and asphalt cement binder (asphalt binder) mixed in a central mixing plant and placed on a prepared course in accordance with these specifications and shall conform to the lines, grades, thicknesses, and typical cross-sections shown on the plans. Each course shall be constructed to the depth, typical section, and elevation required by the plans and shall be rolled, finished, and approved before the placement of the next course.

MATERIALS

403-2.1 Aggregate. Aggregates shall consist of crushed stone, crushed gravel crushed slag, screenings, natural sand and mineral filler, as required. The aggregates should be free of ferrous sulfides, such as pyrite, that would cause "rust" staining that can bleed through pavement markings. The portion retained on the No. 4 (4.75 mm) sieve is coarse aggregate. The portion passing the No. 4 (4.75 mm) sieve and retained on the No. 200 (0.075 mm) sieve is fine aggregate, and the portion passing the No. 200 (0.075 mm) sieve is mineral filler.

a. Coarse aggregate. Coarse aggregate shall consist of sound, tough, durable particles, free from films of matter that would prevent thorough coating and bonding with the bituminous material and free from organic matter and other deleterious substances. The percentage of wear shall not be greater than 40 percent when tested in accordance with ASTM C131. The sodium sulfate soundness loss shall not exceed 12%, or the magnesium sulfate soundness loss shall not exceed 18%, after five cycles, when tested in accordance with ASTM C88. Clay Lumps and friable particles shall not exceed 1.0% when tested in accordance with ASTM C142.

Aggregate shall contain at least 50 percent by weight of individual pieces having two or more fractured faces and 65 percent by weight having at least one fractured face. The area of each face shall be equal to at least 75% of the smallest midsectional area of the piece. When two fractured faces are contiguous, the angle between the planes of fractures shall be at least 30 degrees to count as two fractured faces. Fractured faces shall be achieved by crushing.

The aggregate shall not contain more than a total of 20% by weight of flat particles, elongated particles, and flat and elongated particles when tested in accordance with ASTM D4791 with a value of 3:1.

Slag shall be air-cooled, blast furnace slag, and shall have a compacted weight of not less than 70 pounds per cubic foot (1.12 mg/cubic meter) when tested in accordance with ASTM C29.

b. Fine aggregate. Fine aggregate shall consist of clean, sound, tough, durable, angular shaped particles produced by crushing stone, slag, or gravel that meets the requirements for wear and soundness specified for coarse aggregate. The aggregate particles shall be free from coatings of clay, silt, or other objectionable matter.

The fine aggregate, including any blended material for the fine aggregate, shall have a plasticity index of not more than six (6) and a liquid limit of not more than 25 when tested in accordance with ASTM D4318.

The soundness loss shall not exceed 10% when sodium sulfate is used or 15% when magnesium sulfate is used, after five cycles, when tested per ASTM C88.

Clay lumps and friable particles shall not exceed 1.0 percent, by weight, when tested in accordance with ASTM C142.

Natural (non-manufactured) sand may be used to obtain the gradation of the aggregate blend or to improve the workability of the mix. The amount of sand to be added will be adjusted to produce mixtures conforming to requirements of this specification. The fine aggregate shall not contain more than 15% natural sand by weight of total aggregates. If used, the natural sand shall meet the requirements of ASTM D1073 and shall have a plasticity index of not more than six (6) and a liquid limit of not more than 25 when tested in accordance with ASTM D4318.

The aggregate shall have sand equivalent values of 45 or greater when tested in accordance with ASTM D2419.

c. Sampling. ASTM D75 shall be used in sampling coarse and fine aggregate, and ASTM C183 shall be used in sampling mineral filler.

403-2.2 Mineral filler. If filler, in addition to that naturally present in the aggregate, is necessary, it shall meet the requirements of ASTM D242.

403-2.3 Asphalt cement binder. Asphalt cement binder shall conform to ASTM D6373 Performance Grade (PG) 64-22. A certificate of compliance from the manufacturer shall be included with the mix design submittal.

The supplier's certified test report with test data indicating grade certification for the asphalt binder shall be provided to the Engineer for each load at the time of delivery to the mix plant. A certified test report with test data indicating grade certification for the asphalt binder shall also be provided to the Engineer for any modification of the asphalt binder after delivery to the mix plant and before use in the HMA.

403-2.4 Preliminary material acceptance. Prior to delivery of materials to the job site, the Contractor shall submit certified test reports to the Engineer for the following materials:

a. Coarse aggregate:

(1) Percent of wear
(2) Soundness
(3) Clay lumps and friable particles
(4) Percent fractured faces
(5) Flat and elongated particles

b. Fine aggregate:

(1) Liquid limit and Plasticity index
(2) Soundness
(3) Clay lumps and friable particles
(4) Percent natural sand
(5) Sand equivalent

c. Mineral filler.

d. Asphalt binder. Test results for asphalt binder shall include temperature/viscosity charts for mixing and compaction temperatures.

The certifications shall show the appropriate ASTM tests for each material, the test results, and a statement that the material meets the specification requirement.

The Engineer may request samples for testing, prior to and during production, to verify the quality of the materials and to ensure conformance with the applicable specifications.

403-2.5 Anti-stripping agent. Any anti-stripping agent or additive if required shall be heat stable, shall not change the asphalt cement viscosity beyond specifications, shall contain no harmful ingredients, shall be added in recommended proportion by approved method, and shall be a material approved by the Department of Transportation of the State in which the project is located.

COMPOSITION

403-3.1 Composition of mixture. The HMA plant mix shall be composed of a mixture of well-graded aggregate, filler and anti-strip agent if required, and asphalt binder. The several aggregate fractions shall be sized, handled in separate size groups, and combined in such proportions that the resulting mixture meets the grading requirements of the job mix formula (JMF).

> **403-3.2 Job mix formula. No hot-mixed asphalt (HMA) for payment shall be produced until a JMF has been approved in writing by the Engineer. The asphalt mix design and JMF shall be prepared by an accredited laboratory that meets the requirements of paragraph 403-3.4.** The HMA shall be designed using procedures contained in Asphalt Institute MS-2 Mix Design Manual, 7th Edition. ASTM D6926 shall be used for preparation of specimens using the manually held and operated hammer for the mix design procedure. ASTM D6927 shall be used for testing for Marshall stability and flow.
>
> If material variability exceeds the standard deviations indicated, the JMF and subsequent production targets shall be based on a stability greater than shown in Table 1 and the flow shall be targeted close to the mid-range of the criteria in order to meet the acceptance requirements.

Tensile Strength Ratio (TSR) of the composite mixture, as determined by ASTM D4867, shall not be less than 75 when tested at a saturation of 70-80% or an anti-stripping agent shall be added to the HMA, as necessary, to produce a TSR of not less than 75 when tested at a saturation of 70-80%. If an anti-strip agent is required, it shall be provided by the Contractor at no additional cost to the Owner.

The JMF shall be submitted in writing by the Contractor at least 30 days prior to the start of paving operations. The JMF shall be developed within the same construction season using aggregates currently being produced.

The submitted JMF shall be stamped or sealed by the responsible professional Engineer of the laboratory and shall include the following items as a minimum:

a. Percent passing each sieve size for total combined gradation, individual gradation of all aggregate stockpiles and percent by weight of each stockpile used in the JMF.

b. Percent of asphalt cement.

c. Asphalt performance, grade, and type of modifier if used.

d. Number of blows per side of molded specimen.

e. Laboratory mixing temperature.

f. Laboratory compaction temperature.

g. Temperature-viscosity relationship of the PG asphalt cement binder showing acceptable range of mixing and compaction temperatures and for modified binders include supplier recommended mixing and compaction temperatures.

h. Plot of the combined gradation on the 0.45 power gradation curve.

i. Graphical plots of stability, flow, air voids, voids in the mineral aggregate, and unit weight versus asphalt content.

j. Specific gravity and absorption of each aggregate.

k. Percent natural sand.

l. Percent fractured faces.

m. Percent by weight of flat particles, elongated particles, and flat and elongated particles (and criteria).

n. Tensile Strength Ratio (TSR).

o. Anti-strip agent (if required).

p. Date the JMF was developed. Mix designs that are not dated or which are from a prior construction season shall not be accepted.

The Contractor shall submit to the Engineer the results of verification testing of three (3) asphalt samples prepared at the optimum asphalt content. The average of the results of this testing shall indicate conformance with the JMF requirements specified in Tables 1 and 3.

When the project requires asphalt mixtures of differing aggregate gradations, a separate JMF and the results of JMF verification testing shall be submitted for each mix.

The JMF for each mixture shall be in effect until a modification is approved in writing by the Engineer. Should a change in sources of materials be made, a new JMF must be submitted within 15 days and approved by the Engineer in writing before the new material is used. After the initial production JMF has been approved by the Engineer and a new or modified JMF is required for whatever reason, the subsequent cost of the Engineer's approval of the new or modified JMF will be borne by the Contractor. There will be no time extension given or considerations for extra costs associated with the stoppage of production paving or restart of production paving due to the time needed for the Engineer to approve the initial, new or modified JMF.

The Marshall Design Criteria applicable to the project shall be as specified in Table 1.

Table 1. Marshall Design Criteria

Test Property	Value
Number of blows	50
Stability, pounds (Newtons) minimum	1000 (4448)
Flow, 0.01 inch (0.25 mm)	8-20
Air voids (percent)	3.5
Percent voids in mineral aggregate, minimum	See Table 2

Table 2. Minimum Percent Voids In Mineral Aggregate (VMA)

Aggregate (See Table 3)	Minimum VMA
Gradation 3	16
Gradation 2	15
Gradation 1	14

The mineral aggregate shall be of such size that the percentage composition by weight, as determined by laboratory sieves, will conform to the gradation or gradations specified in Table 3 when tested in accordance with ASTM C136 and ASTM C117.

The gradations in Table 3 represent the limits that shall determine the suitability of aggregate for use from the sources of supply, be well graded from coarse to fine and shall not vary from the low limit on one sieve to the high limit on the adjacent sieve, or vice versa.

Table 3. Aggregate - HMA Pavements

Sieve Size	Percentage by Weight Passing Sieve
1 inch (25 mm)	--
3/4 inch (19 mm)	--
1/2 inch (12 mm)	100
3/8 inch (9 mm)	79-99
No. 4 (4.75 mm)	58-78
No. 8 (2.36 mm)	39-59
No. 16 (1.18 mm)	26-46
No. 30 (0.60 mm)	19-35
No. 50 (0.30 mm)	12-24
No. 100 (0.15 mm)	7-17
No. 200 (0.075 mm)	3-6
Asphalt Percent:	
Stone or gravel	5.5-8.0
Slag	7.0-10.5

The aggregate gradations shown are based on aggregates of uniform specific gravity. The percentages passing the various sieves shall be corrected when aggregates of varying specific gravities are used, as indicated in the Asphalt Institute MS-2 Mix Design Manual, 7th Edition.

403-3.4 Job mix formula (JMF) laboratory. The Contractor's laboratory used to develop the JMF shall be accredited in accordance with ASTM D3666. The laboratory accreditation must be current and listed on the accrediting authority's website. All test methods required for developing the JMF must be listed on the lab accreditation. A copy of the laboratory's current accreditation and accredited test methods shall be submitted to the Engineer prior to start of construction.

403-3.5 Test section. A test section is not required.

CONSTRUCTION METHODS

403-4.1 Weather limitations. The HMA shall not be placed upon a wet surface or when the surface temperature of the underlying course is less than specified in Table 4. The temperature requirements may be waived by the Engineer, if requested; however, all other requirements including compaction shall be met.

Table 4. Surface Temperature Limitations of Underlying Course

Mat Thickness	Base Temperature (Minimum)	
	Degrees F	Degrees C
3 inches (7.5 cm) or greater	40	4
Greater than 2 inches (50 mm) but less than 3 inches (7.5 cm)	45	7

403-4.2 HMA plant. Plants used for the preparation of HMA shall conform to the requirements of American Association of State Highway and Transportation Officials (AASHTO) M156 with the following changes:

a. Requirements for all plants include:

(1) Truck scales. The HMA shall be weighed on approved scales furnished by the Contractor, or on certified public scales at the Contractor's expense. Scales shall be inspected and sealed as often as the Engineer deems necessary to assure their accuracy. Scales shall conform to the requirements of the General Provisions, subsection 90-01.

In lieu of scales, and as approved by the Engineer, HMA weights may be determined by the use of an electronic weighing system equipped with an automatic printer that weighs the total HMA production and as often thereafter as requested by the Engineer.

(2) Testing facilities. The Contractor shall ensure laboratory facilities are provided at the plant for the use of the Engineer. The lab shall have sufficient space and equipment so that both testing representatives (Engineer's and Contractor's) can operate efficiently. The lab shall meet the requirements of ASTM D3666 including all necessary equipment, materials, and current reference standards to comply with the specifications and masonry saw with diamond blade for trimming pavement cores and samples. The plant testing laboratory shall have a floor space area of not less than 200 square feet (18.5 sq m), with a ceiling height of not less than 7-1/2 feet (2 m). The laboratory shall be weather tight, sufficiently heated in cold weather, air-conditioned in hot weather to maintain temperatures for testing purposes of 70°F ±5°F (21°C ±2.3°C). The plant testing laboratory shall be located on the plant site to provide an unobstructed view, from one of its windows, of the trucks being loaded with the plant mix materials. In addition, the facility shall include the minimum:

(a) Adequate artificial lighting.

(b) Electrical outlets sufficient in number and capacity for operating the required testing equipment and drying samples.

(c) A minimum of two (2) Underwriter's Laboratories approved fire extinguishers of the appropriate types and class.

(d) Work benches for testing.

(e) Desk with chairs and file cabinet.

(f) Sanitary facilities convenient to testing laboratory.

(g) Exhaust fan to outside air.

(h) Sink with running water.

Failure to provide the specified facilities shall be sufficient cause for disapproving HMA plant operations.

Laboratory facilities shall be kept clean, and all equipment shall be maintained in proper working condition. The Engineer shall be permitted unrestricted access to inspect the Contractor's laboratory facility

and witness quality control activities. The Engineer will advise the Contractor in writing of any noted deficiencies concerning the laboratory facility, equipment, supplies, or testing personnel and procedures. When the deficiencies are serious enough to be adversely affecting the test results, the incorporation of the materials into the work shall be suspended immediately and will not be permitted to resume until the deficiencies are satisfactorily corrected.

(3) Inspection of plant. The Engineer, or Engineer's authorized representative, shall have access, at all times, to all areas of the plant for checking adequacy of equipment; inspecting operation of the plant: verifying weights, proportions, and material properties; and checking the temperatures maintained in the preparation of the mixtures.

(4) Storage bins and surge bins. The HMA stored in storage and surge bins shall meet the same requirements as HMA loaded directly into trucks and may be permitted under the following conditions:

(a) Stored in non-insulated bins for a period of time not to exceed three (3) hours.

(b) Stored in insulated storage bins for a period of time not to exceed eight (8) hours.

If the Engineer determines that there is an excessive amount of heat loss, segregation or oxidation of the HMA due to temporary storage, no temporary storage will be allowed.

403-4.3 Hauling equipment. Trucks used for hauling HMA shall have tight, clean, and smooth metal beds. To prevent the HMA from sticking to the truck beds, the truck beds shall be lightly coated with a minimum amount of paraffin oil, lime solution, or other material approved by the Engineer. Petroleum products shall not be used for coating truck beds. Each truck shall have a suitable cover to protect the mixture from adverse weather. When necessary, to ensure that the mixture will be delivered to the site at the specified temperature, truck beds shall be insulated or heated and covers shall be securely fastened.

403-4.3.1 Material transfer vehicle (MTV). A material transfer vehicle is not required.

403-4.4 HMA pavers. HMA pavers shall be self-propelled with an activated heated screed, capable of spreading and finishing courses of HMA that will meet the specified thickness, smoothness, and grade. The paver shall have sufficient power to propel itself and the hauling equipment without adversely affecting the finished surface.

The paver shall have a receiving hopper of sufficient capacity to permit a uniform spreading operation. The hopper shall be equipped with a distribution system to place the HMA uniformly in front of the screed without segregation. The screed shall effectively produce a finished surface of the required evenness and texture without tearing, shoving, or gouging the mixture.

If, during construction, it is found that the spreading and finishing equipment in use leaves tracks or indented areas, or produces other blemishes in the pavement that are not satisfactorily corrected by the scheduled operations, the use of such equipment shall be discontinued and satisfactory equipment shall be provided by the Contractor.

403-4.4.1 Automatic grade control. The HMA paver shall be equipped with a control system capable of automatically maintaining the specified screed elevation. The control system shall be automatically actuated from either a reference line and/or through a system of mechanical sensors or sensor-directed mechanisms or devices that will maintain the paver screed at a predetermined transverse slope and at the proper elevation to obtain the required surface. The transverse slope controller shall be capable of maintaining the screed at the desired slope within ±0.1%.

The controls shall be capable of working in conjunction with any of the following attachments:

a. Ski-type device of not less than 30 feet (9 m) in length

b. Taut stringline (wire) set to grade

c. Short ski or shoe

d. Laser control

403-4.5 Rollers. Rollers of the vibratory, steel wheel, and pneumatic-tired type shall be used. They shall be in good condition, capable of operating at slow speeds to avoid displacement of the HMA. The number, type, and weight of rollers shall be sufficient to compact the HMA to the required density while it is still in a workable condition.

All rollers shall be specifically designed and suitable for compacting hot mix bituminous concrete and shall be properly used. Rollers that impair the stability of any layer of a pavement structure or underlying soils shall not be used. Depressions in pavement surfaces caused by rollers shall be repaired by the Contractor at their own expense.

The use of equipment that causes crushing of the aggregate will not be permitted.

403-4.5.1 Density device. The Contractor shall have on site a density gauge during all paving operations in order to assist in the determination of the optimum rolling pattern, type of roller and frequencies, as well as to monitor the effect of the rolling operations during production paving. The Contractor shall also supply a qualified technician during all paving operations to calibrate the density gauge and obtain accurate density readings for all new HMA. These densities shall be supplied to the Engineer upon request at any time during construction. No separate payment will be made for supplying the density gauge and technician.

403-4.6 Preparation of asphalt binder. The asphalt binder shall be heated in a manner that will avoid local overheating and provide a continuous supply of the bituminous material to the mixer at a uniform temperature. The temperature of the unmodified asphalt binder delivered to the mixer shall be sufficient to provide a suitable viscosity for adequate coating of the aggregate particles, but shall not exceed 325°F (160°C) when added to the aggregate. The temperature of modified asphalt binder shall be no more than 350°F (175°C) when added to the aggregate.

403-4.7 Preparation of mineral aggregate. The aggregate for the HMA shall be heated and dried. The maximum temperature and rate of heating shall be such that no damage occurs to the aggregates. The temperature of the aggregate and mineral filler shall not exceed 350°F (175°C) when the asphalt binder is added. Particular care shall be taken that aggregates high in calcium or magnesium content are not damaged by overheating. The temperature shall not be lower than is required to obtain complete coating and uniform distribution on the aggregate particles and to provide a mixture of satisfactory workability.

403-4.8 Preparation of HMA. The aggregates and the asphalt binder shall be weighed or metered and introduced into the mixer in the amount specified by the JMF.

The combined materials shall be mixed until the aggregate obtains a uniform coating of asphalt binder and is thoroughly distributed throughout the mixture. Wet mixing time shall be the shortest time that will produce a satisfactory mixture, but not less than 25 seconds for batch plants. The wet mixing time for all plants shall be established by the Contractor, based on the procedure for determining the percentage of coated particles described in ASTM D2489, for each individual plant and for each type of aggregate used. The wet mixing time will be set to achieve 95% of coated particles. For continuous mix plants, the minimum mixing time shall be determined by dividing the weight of its contents at operating level by the weight of the mixture delivered per second by the mixer. The moisture content of all HMA upon discharge shall not exceed 0.5%.

403-4.9 Preparation of the underlying surface. Immediately before placing the HMA, the underlying course shall be cleaned of all dust and debris.

403-4.10 Laydown plan, transporting, placing, and finishing. Prior to the placement of the HMA, the Contractor shall prepare a laydown plan for approval by the Engineer. This is to minimize the number of cold joints in the pavement. The laydown plan shall include the sequence of paving laydown by stations, width of lanes, temporary ramp locations, and laydown temperature. The laydown plan shall also include

estimated time of completion for each portion of the work (that is, milling, paving, rolling, cooling, etc.). Modifications to the laydown plan shall be approved by the Engineer.

The HMA shall be transported from the mixing plant to the site in vehicles conforming to the requirements of paragraph 403-4.3. Deliveries shall be scheduled so that placing and compacting of HMA is uniform with minimum stopping and starting of the paver. Hauling over freshly placed material shall not be permitted until the material has been compacted, as specified, and allowed to cool to atmospheric temperature.

The alignment and elevation of the paver shall be regulated from outside reference lines established for this purpose for the first lift of all runway and taxiway pavements. Successive lifts of HMA surface course may be placed using a ski, or laser control per paragraph 403-4.4.1, provided grades of the first lift of bituminous surface course meet the tolerances of paragraphs 403-5.2b(5) as verified by a survey. Contractor shall survey each lift of HMA surface course and certify to Engineer that every lot of each lift meets the grade tolerances of paragraph 403-5.2b(5) before the next lift can be placed.

The initial placement and compaction of the HMA shall occur at a temperature suitable for obtaining density, surface smoothness, and other specified requirements but not less than 250°F (121°C).

Edges of existing HMA pavement abutting the new work shall be saw cut and carefully removed as shown on the drawings and coated with asphalt tack coat before new material is placed against it.

Upon arrival, the mixture shall be placed to the full width by a bituminous paver. It shall be struck off in a uniform layer of such depth that, when the work is completed, it shall have the required thickness and conform to the grade and contour indicated. The speed of the paver shall be regulated to eliminate pulling and tearing of the HMA mat. Unless otherwise permitted, placement of the HMA shall begin along the centerline of a crowned section or on the high side of areas with a one-way slope. The HMA shall be placed in consecutive adjacent strips having a minimum width of 10 feet (3m) except where edge lanes require less width to complete the area. Additional screed sections shall not be attached to widen paver to meet the minimum lane width requirements specified above unless additional auger sections are added to match. The longitudinal joint in one course shall offset the longitudinal joint in the course immediately below by at least one foot (30 cm); however, the joint in the surface top course shall be at the centerline of crowned pavements. Transverse joints in one course shall be offset by at least 10 feet (3 m) from transverse joints in the previous course.

Transverse joints in adjacent lanes shall be offset a minimum of 10 feet (3 m).

On areas where irregularities or unavoidable obstacles make the use of mechanical spreading and finishing equipment impractical, the HMA may be spread and luted by hand tools.

Areas of segregation in the course, as determined by the Engineer, shall be removed and replaced at the Contractor's expense. The area shall be removed by saw cutting and milling a minimum of 2 inches (50 mm) deep. The area to be removed and replaced shall be a minimum width of the paver and a minimum of 10 feet (3 m) long.

403-4.11 Compaction of HMA. After placing, the HMA shall be thoroughly and uniformly compacted by power rollers. The surface shall be compacted as soon as possible when the mixture has attained sufficient stability so that the rolling does not cause undue displacement, cracking or shoving. The sequence of rolling operations and the type of rollers used shall be at the discretion of the Contractor. The speed of the roller shall, at all times, be sufficiently slow to avoid displacement of the hot mixture and be effective in compaction. Any displacement occurring as a result of reversing the direction of the roller, or from any other cause, shall be corrected at once.

Sufficient rollers shall be furnished to handle the output of the plant. Rolling shall continue until the surface is of uniform texture, true to grade and cross-section, and the required field density is obtained. To prevent

adhesion of the mixture to the roller, the wheels shall be equipped with a scraper and kept properly moistened using a water soluble asphalt release agent approved by the Engineer.

In areas not accessible to the roller, the mixture shall be thoroughly compacted with approved power driven tampers. Tampers shall weigh not less than 275 pounds (125 kg), have a tamping plate width not less than 15 inches (38 cm), be rated at not less than 4,200 vibrations per minute, and be suitably equipped with a standard tamping plate wetting device.

Any HMA that becomes loose and broken, mixed with dirt, contains check-cracking, or in any way defective shall be removed and replaced with fresh hot mixture and immediately compacted to conform to the surrounding area. This work shall be done at the Contractor's expense. Skin patching shall not be allowed.

403-4.12 Joints. The formation of all joints shall be made in such a manner as to ensure a continuous bond between the courses and obtain the required density. All joints shall have the same texture as other sections of the course and meet the requirements for smoothness and grade. The roller shall not pass over the unprotected end of the freshly laid HMA except when necessary to form a transverse joint. When necessary to form a transverse joint, it shall be made by means of placing a bulkhead or by tapering the course. The tapered edge shall be cut back to its full depth and width on a straight line to expose a vertical face prior to placing the adjacent lane. In both methods, all contact surfaces shall be coated with an asphalt tack coat before placing any fresh HMA against the joint.

Longitudinal joints which are have been left exposed for more than four (4) hours; the surface temperature has cooled to less than 175°F (80°C); or are irregular, damaged, uncompacted or otherwise defective shall be cut back 3 inches (75 mm) to 6 inches (150 mm) to expose a clean, sound, uniform vertical surface for the full depth of the course. All cutback material shall be removed from the project. A asphalt tack coat or other product approved by the Engineer shall be applied to the clean, dry joint prior to placing any additional fresh HMA against the joint. Any laitance produced from cutting joints shall be removed by vacuuming and washing. The cost of this work shall be considered incidental to the cost of the HMA.

403-4.13 Diamond grinding. When required, diamond grinding shall be accomplished by sawing with saw blades impregnated with industrial diamond abrasive. The saw blades shall be assembled in a cutting head mounted on a machine designed specifically for diamond grinding that will produce the required texture and smoothness level without damage to the pavement. The saw blades shall be 1/8-inch (3-mm) wide and there shall be a minimum of 55 to 60 blades per 12 inches (300 mm) of cutting head width; the actual number of blades will be determined by the Contractor and depend on the hardness of the aggregate. Each machine shall be capable of cutting a path at least 3 feet (0.9 m) wide. Equipment that causes ravels, aggregate fractures, spalls or disturbance to the pavement will not be permitted. The depth of grinding shall not exceed 1/2 inch (13mm) and all areas in which diamond grinding has been performed will be subject to the final pavement thickness tolerances specified. Grinding will be tapered in all directions to provide smooth transitions to areas not requiring grinding. Areas that have been ground will be sealed with a P-608 surface treatment as directed by the Engineer. It may be necessary to seal a larger area to avoid surface treatment creating any conflict with runway or taxiway markings.

403-4.14 Nighttime Paving Requirements. Paving during nighttime construction shall require the following:

a. All paving machines, rollers, distribution trucks and other vehicles required by the Contractor for his operations shall be equipped with artificial illumination sufficient to safely complete the work.

b. Minimum illumination level shall be 20 horizontal foot-candles and maintained in the following areas:

(1) An area of 30 feet (9 m) wide by 30 feet (9 m) long immediately behind the paving machines during the operations of the machines.

(2) An area 15 feet (4.5 m) wide by 30 feet (9 m) long immediately in front and back of all rolling equipment, during operation of the equipment.

(3) An area 15 feet (4.5 m) wide by 15 feet (4.5 m) long at any point where an area is being tack coated prior to the placement of pavement.

c. As partial fulfillment of the above requirements, the Contractor shall furnish and use, complete artificial lighting units with a minimum capacity of 3,000 watt electric beam lights, affixed to all equipment in such a way to direct illumination on the area under construction.

d. A lighting plan must be submitted by the Contractor and approved by the Engineer prior to the start of any nighttime work.

MATERIAL ACCEPTANCE

403-5.1 Acceptance sampling and testing. Unless otherwise specified, all acceptance sampling and testing necessary to determine conformance with the requirements specified in this section will be performed by the Engineer at no cost to the Contractor except that coring as required in this section shall be completed and paid for by the Contractor.

Testing organizations performing these tests shall be accredited in accordance with ASTM D3666. The laboratory accreditation must be current and listed on the accrediting authority's website. All test methods required for acceptance sampling and testing must be listed on the lab accreditation. A copy of the laboratory's current accreditation and accredited test methods shall be submitted to the Engineer prior to start of construction. All equipment in Contractor furnished laboratories shall be calibrated by an independent testing organization prior to the start of operations.

a. Hot mixed asphalt. Plant-produced HMA shall be tested for air voids and stability and flow on a lot basis. Sampling shall be from material deposited into trucks at the plant or from trucks at the job site. Samples shall be taken in accordance with ASTM D979.

A standard lot shall be equal to one day's production or 2000 tons (1814 metric tons) whichever is smaller. If the day's production is expected to exceed 2000 tons (1814 metric tons), but less than 4000 tons (3628 metric tons), the lot size shall be 1/2 day's production. If the day's production exceeds 4000 tons (3628 metric tons), the lot size shall be an equal sized fraction of the day's production, but shall not exceed 2000 tons (1814 metric tons).

Where more than one plant is simultaneously producing HMA for the job, the lot sizes shall apply separately for each plant.

(1) Sampling. Each lot will consist of four equal sublots. Sufficient HMA for preparation of test specimens for all testing will be sampled by the Engineer on a random basis, in accordance with the procedures contained in ASTM D3665. Samples will be taken in accordance with ASTM D979.

The sample of HMA may be put in a covered metal tin and placed in an oven for not less than 30 minutes nor more than 60 minutes to stabilize to compaction temperature. The compaction temperature of the specimens shall be as specified in the JMF.

(2) Testing. Sample specimens shall be tested for stability and flow in accordance with ASTM D6927. Air voids will be determined by the Engineer in accordance with ASTM D3203. One set of laboratory compacted specimens will be prepared for each sublot in accordance with ASTM D6926 at the number of blows required by paragraph 403-3.2,

Table 1. Each set of laboratory compacted specimens will consist of three test specimens prepared from the same sample. The manual hammer in ASTM D6926 shall be used.

Prior to testing, the bulk specific gravity of each test specimen shall be measured by the Engineer in accordance with ASTM D2726 using the procedure for laboratory-prepared thoroughly dry specimens for use in computing air voids and pavement density.

For air voids determination, the theoretical maximum specific gravity of the mixture shall be measured one time for each sublot in accordance with ASTM D2041. The value used in the air voids computation for each sublot shall be based on theoretical maximum specific gravity measurement for the sublot.

The stability and flow for each sublot shall be computed by averaging the results of all test specimens representing that sublot.

(3) Acceptance. Acceptance of plant produced HMA for stability, flow, and air voids shall be determined by the Engineer in accordance with the requirements of paragraph 403-5.1.

b. In-place HMA. HMA placed in the field shall be tested for mat and joint density on a lot basis. A standard lot shall be equal to one day's production or 2000 tons (1814 metric tons) whichever is smaller. If the day's production is expected to exceed 2000 tons (1814 metric tons), but less than 4000 tons (3628 metric tons), the lot size shall be 1/2 day's production. If the day's production exceeds 4000 tons (3628 metric tons), the lot size shall be an equal sized fraction of the day's production, but shall not exceed 2000 tons (1814 metric tons).

(1) Mat density. The lot size shall be the same as that indicated in paragraph 403-5.1a The lot shall be divided into four equal sublots. One core of finished, compacted HMA shall be taken by the Contractor from each sublot. Core locations will be determined by the Engineer on a random basis in accordance with procedures contained in ASTM D3665. Cores for mat density shall not be taken closer than one foot (30 cm) from a transverse or longitudinal joint.

(2) Joint density. The lot size shall be the total length of longitudinal joints constructed by a lot of HMA as defined in paragraph 403-5.1a. The lot shall be divided into four equal sublots. One core of finished, compacted HMA shall be taken by the Contractor from each sublot. Core locations will be determined by the Engineer on a random basis in accordance with procedures contained in ASTM D3665. All cores for joint density shall be taken centered on the joint. The minimum core diameter for joint density determination shall be 5 inches (125 mm).

(3) Sampling. Samples shall be neatly cut with a diamond core drill bit. Samples will be taken in accordance with ASTM D979. The minimum diameter of the sample shall be 5 inches (125 mm). Samples that are defective, as a result of sampling, shall be discarded and another sample taken. The Contractor shall furnish all tools, labor, and materials for cutting samples, cleaning, and filling the cored pavement. Cored pavement shall be cleaned and core holes shall be filled in a manner acceptable to the Engineer and within one day after sampling. Laitance produced by the coring operation shall be removed immediately. The top most lift of bituminous material shall be completely bonded to the underlying layers of bituminous material. If any of the cores reveal that the surface is not bonded to the bituminous layer immediately below the surface then additional cores shall be taken as directed by the Engineer in accordance with paragraph 403-5.1b to determine the extent of any delamination. All delaminated areas shall be completely removed by milling to the limits and depth and replaced as directed by the Engineer at no additional cost.

(4) Testing. The bulk specific gravity of each cored sample will be measured by the Engineer in accordance with ASTM D2726. Samples will be taken in accordance with ASTM D979. The percent compaction (density) of each sample will be determined by dividing the bulk specific gravity of each sublot sample by the average bulk specific gravity of all laboratory prepared specimens for the lot, as determined in paragraph 403-5.1a(2). The bulk specific gravity used to determine the joint density at joints formed between different lots shall be the lowest of the bulk specific gravity values from the two different lots.

(5) Acceptance. Acceptance of field placed HMA for mat density will be determined by the Engineer in accordance with the requirements of paragraph 403-5.2b(1). Acceptance for joint density will be determined by the Engineer in accordance with the requirements of paragraph 403-5.2b(2).

c. Partial lots HMA. When operational conditions cause a lot to be terminated before the specified number of tests have been made for the lot, or when the Contractor and Engineer agree in writing to allow overages or other minor tonnage placements to be considered as partial lots, the following procedure will be used to adjust the lot size and the number of tests for the lot.

The last batch produced where production is halted will be sampled, and its properties shall be considered as representative of the particular sublot from which it was taken. In addition, an agreed to minor placement will be sampled, and its properties shall be considered as representative of the particular sublot from which it was taken. Where three sublots are produced, they shall constitute a lot. Where one or two sublots are produced, they shall be incorporated into the next lot, and the total number of sublots shall be used in the acceptance plan calculation, that is, n = 5 or n = 6, for example. Partial lots at the end of asphalt production on the project shall be included with the previous lot. The lot size for field placed material shall correspond to that of the plant material, except that, in no cases, shall less than three (3) cored samples be obtained, that is, n = 3.

403-5.2 Acceptance criteria.

a. General. Acceptance will be based on the following characteristics of the HMA and completed pavement and test results:

(1) Air Voids
(2) Mat density
(3) Joint density
(4) Thickness
(5) Smoothness
(6) Grade
(**7**) Stability
(**8**) Flow

Mat density will be evaluated for acceptance in accordance with paragraph 403-5.2b(1). Stability and flow will be evaluated for acceptance in accordance with paragraph 403-5.1. Joint density will be evaluated for acceptance in accordance with paragraph 403-5.2b(2).

Thickness will be evaluated by the Engineer for compliance in accordance with paragraph 403-5.2b(3). Acceptance for smoothness will be based on the criteria contained in paragraph 403-5.2b(4). Acceptance for grade will be based on the criteria contained in paragraph 403-5.2b(5).

The Engineer may at any time reject and require the Contractor to dispose of any batch of HMA which is rendered unfit for use due to contamination, segregation, incomplete coating of aggregate, or improper mix temperature. Such rejection may be based on only visual inspection or temperature measurements. In

the event of such rejection, the Contractor may take a representative sample of the rejected material in the presence of the Engineer, and if it can be demonstrated in the laboratory, in the presence of the Engineer, that such material was erroneously rejected, payment will be made for the material at the contract unit price.

b. Acceptance criteria.

(1) Mat density. Acceptance of each lot of plant produced material for mat density shall be based on the average of all of the densities taken from the sublots. If the average mat density of the lot so established equals or exceeds 96%, the lot shall be acceptable. If the average mat density of the lot is below 96%, the lot shall be removed and replaced at the Contractor's expense.

(2) Joint density. Acceptance of each lot of plant produced HMA for joint density shall be based on the average of all of the joint densities taken from the sublots. If the average joint density of the lot so established equals or exceeds 94%, the lot shall be acceptable. If the average joint density of the lot is less than 94%, the Contractor shall stop production and evaluate the method of compacting joints. Production may resume once the reason for poor compaction has been determined and appropriate measures have been taken to ensure proper compaction.

(3) Thickness. Thickness of each course shall be evaluated by the Engineer for compliance to the requirements shown on the plans. Measurements of thickness shall be made by the Engineer using the cores extracted for each sublot for density measurement. The maximum allowable deficiency at any point shall not be more than 1/4 inch (6 mm) less than the thickness indicated for the lift. Average thickness of lift, or combined lifts, shall not be less than the indicated thickness. Where thickness deficiency exceeds the specified tolerances, the lot or sublot shall be corrected by the Contractor at his expense by removing the deficient area and replacing with new pavement. The Contractor, at his expense, may take additional cores as approved by the Engineer to circumscribe the deficient area.

(5) Grade. Grade shall be evaluated on the first day of placement and then every day to allow adjustments to paving operations if measurements do not meet specification requirements. The Contractor must submit the survey data to the Engineer by the following day after measurements have been taken. The finished surface of the pavement shall not vary from the gradeline elevations and cross-sections shown on the plans by more than 1/2 inch (12 mm). The finished grade of each lot will be determined by running levels at intervals of 50 feet (15 m) or less longitudinally and all breaks in grade transversely (not to exceed 50 feet (15 m)) to determine the elevation of the completed pavement. The Contractor shall pay the cost of surveying of the level runs that shall be performed by a licensed surveyor. The documentation, stamped and signed by a licensed surveyor, shall be provided by the Contractor to the Engineer. The lot size shall be 2,000 square yards (square meters). When more than 15% of all the measurements within a lot are outside the specified tolerance, or if any one shot within the lot deviates 3/4 inch (19 mm) or more from planned grade, the Contractor shall remove the deficient area to the depth of the final course of pavement and replace with new material. Skin patching shall not be permitted. Isolated high points may be ground off providing the course thickness complies with the thickness specified on the plans. High point grinding will be limited to 15 square yard (12.5 sq m). The surface of the ground pavement shall have a texture consisting of grooves between 0.090 and 0.130 inches (2 and 3.5 mm) wide. The peaks and ridges shall be approximately 1/32 inch (1 mm) higher than the bottom of the grooves. The pavement shall be left in a clean condition. The removal of all of the slurry resulting from the grinding operation shall be continuous. The grinding operation should be controlled so the residue from the operation does not flow across other lanes of pavement. Areas in excess of 15 square yard (12.5 sq m) will require removal and replacement of the pavement in accordance with the limitations noted above. Contractor shall apply a surface treatment per P-608 to all areas that have been subject to grinding.

c. Density outliers. If the tests within a lot include a very large or a very small value that appears to be outside the normal limits of variation, check for an outlier in accordance with ASTM E178, at a significance level of 5%, to determine if this value should be discarded.

403-5.3 Resampling Pavement for Mat Density.

a. General. Resampling of a lot of pavement will only be allowed for mat density and then, only if the Contractor requests same in writing, within 48 hours after receiving the written test results from the Engineer. A retest will consist of all the sampling and testing procedures contained in paragraphs 403-5.1. Only one resampling per lot will be permitted.

(1) A redefined mat density shall be calculated for the resampled lot. The number of tests used to calculate the redefined mat density shall include the initial tests made for that lot plus the retests.

(2) The cost for resampling and retesting shall be borne by the Contractor.

b. Payment for resampled lots. The redefined mat density for a resampled lot shall be used to evaluate the acceptance of that lot in accordance with paragraph 403-5.2.

c. Outliers. Check for outliers in accordance with ASTM E178, at a significance level of 5%.

CONTRACTOR QUALITY CONTROL

403-6.1 General. The Contractor shall perform quality control sampling, testing, and inspection during all phases of the work and shall perform them at a rate sufficient to ensure that the work conforms to the contract requirements, and at minimum test frequencies required by paragraph 403-6.3, including but not limited to:

a. Mix Design

b. Aggregate Grading

c. Quality of Materials

d. Stockpile Management

e. Proportioning

f. Mixing and Transportation

g. Placing and Finishing

h. Joints

i. Compaction

j. Surface smoothness

k. Personnel

l. Laydown plan

The Contractor shall perform quality control sampling, testing, and inspection during all phases of the work and shall perform them at a rate sufficient to ensure that the work conforms to the contract requirements, and at minimum test frequencies required by paragraph 403-6.3 and Section 100 of the General Provisions. As a part of the process for approving the Contractor's plan, the Engineer may require the Contractor's technician to perform testing of samples to demonstrate an acceptable level of performance.

No partial payment will be made for materials that are subject to specific quality control requirements without an approved plan.

403-6.2 Contractor testing laboratory. The lab shall meet the requirements of ASTM D3666 including all necessary equipment, materials, and current reference standards to comply with the specifications.

403-6.3 Quality control testing. The Contractor shall perform all quality control tests necessary to control the production and construction processes applicable to these specifications and as set forth in the approved Quality Control Program. The testing program shall include, but not necessarily be limited to, tests for the control of asphalt content, aggregate gradation, temperatures, aggregate moisture, field compaction, and surface smoothness. A Quality Control Testing Plan shall be developed as part of the Quality Control Program.

a. Asphalt content. A minimum of two asphalt content tests shall be performed per lot in accordance with ASTM D6307 or ASTM D2172 if the correction factor in ASTM D6307 is greater than 1.0. The asphalt content for the lot will be determined by averaging the test results.

b. Gradation. Aggregate gradations shall be determined a minimum of twice per lot from mechanical analysis of extracted aggregate in accordance with ASTM D5444 and ASTM C136, and ASTM C117.

c. Moisture content of aggregate. The moisture content of aggregate used for production shall be determined a minimum of once per lot in accordance with ASTM C566.

d. Moisture content of HMA. The moisture content of the HMA shall be determined once per lot in accordance with ASTM D1461

e. Temperatures. Temperatures shall be checked, at least four times per lot, at necessary locations to determine the temperatures of the dryer, the asphalt binder in the storage tank, the HMA at the plant, and the HMA at the job site.

f. In-place density monitoring. The Contractor shall conduct any necessary testing to ensure that the specified density is being achieved. A nuclear gauge may be used to monitor the pavement density in accordance with ASTM D2950.

g. Additional testing. Any additional testing that the Contractor deems necessary to control the process may be performed at the Contractor's option.

h. Monitoring. The Engineer reserves the right to monitor any or all of the above testing.

403-6.4 Sampling. When directed by the Engineer, the Contractor shall sample and test any material that appears inconsistent with similar material being sampled, unless such material is voluntarily removed and replaced or deficiencies corrected by the Contractor. All sampling shall be in accordance with standard procedures specified.

403-6.5 Control charts. The Contractor shall maintain linear control charts both for individual measurements and range (i.e., difference between highest and lowest measurements) for aggregate gradation, asphalt content, and VMA. The VMA for each sublot will be calculated and monitored by the Quality Control laboratory.

Control charts shall be posted in a location satisfactory to the Engineer and shall be kept current. As a minimum, the control charts shall identify the project number, the contract item number, the test number, each test parameter, the Action and Suspension Limits applicable to each test parameter, and the Contractor's test results. The Contractor shall use the control charts as part of a process control system for identifying potential problems and assignable causes before they occur. If the Contractor's projected data during production indicates a problem and the Contractor is not taking satisfactory corrective action, the Engineer may suspend production or acceptance of the material.

a. Individual measurements. Control charts for individual measurements shall be established to maintain process control within tolerance for aggregate gradation, asphalt content, and VMA. The control charts shall use the JMF target values as indicators of central tendency for the following test parameters with associated Action and Suspension Limits:

Control Chart Limits For Individual Measurements		
Sieve	**Action Limit**	**Suspension Limit**
3/4 inch (19 mm)	±6%	±9%
1/2 inch (12 mm)	±6%	±9%
3/8 inch (9 mm)	±6%	±9%
No. 4 (4.75 mm)	±6%	±9%
No. 16 (1.18 mm)	±5%	±7.5%
No. 50 (0.30 mm)	±3%	±4.5%
No. 200 (0.075 mm)	±2%	±3%
Asphalt Content	±0.45%	±0.70%
VMA	-1.00%	-1.5%

b. Range. Control charts for range shall be established to control process variability for the test parameters and Suspension Limits listed below. The range shall be computed for each lot as the difference between the two test results for each control parameter. The Suspension Limits specified below are based on a sample size of n = 2. Should the Contractor elect to perform more than two tests per lot, the Suspension Limits shall be adjusted by multiplying the Suspension Limit by 1.18 for n = 3 and by 1.27 for n = 4.

Control Chart Limits Based On Range (Based On n = 2)	
Sieve	**Suspension Limit**
1/2 inch (12 mm)	11%
3/8 inch (9 mm)	11%
No. 4 (4.75 mm)	11%
No. 16 (1.18 mm)	9%
No. 50 (0.30 mm)	6%
No. 200 (0.075 mm)	3.5%
Asphalt Content	0.8%

c. Corrective action. The Contractor Quality Control Program shall indicate that appropriate action shall be taken when the process is believed to be out of tolerance. The Plan shall contain sets of rules to gauge when a process is out of control and detail what action will be taken to bring the process into control. As a minimum, a process shall be deemed out of control and production stopped and corrective action taken, if:

(1) One point falls outside the Suspension Limit line for individual measurements or range; or

(2) Two points in a row fall outside the Action Limit line for individual measurements.

403-6.6 Quality control reports. The Contractor shall maintain records and shall submit reports of quality control activities daily, in accordance with the Contractor Quality Control Program described in General Provisions, Section 100.

METHOD OF MEASUREMENT

403-7.1 Measurement. The quantity of HMA to be paid for shall not be measured directly and shall be considered incidental to the work items.

BASIS OF PAYMENT

403-8.1 Payment. Payment for this item shall be considered incidental to the work items.

TESTING REQUIREMENTS

AASHTO M156	Standard Specification for Requirements for Mixing Plants for Hot-Mixed, Hot-Laid Bituminous Paving Mixtures
ASTM C29	Standard Test Method for Bulk Density ("Unit Weight") and Voids in Aggregate
ASTM C88	Standard Test Method for Soundness of Aggregates by Use of Sodium Sulfate or Magnesium Sulfate
ASTM C117	Standard Test Method for Materials Finer than 75-µm (No. 200) Sieve in Mineral Aggregates by Washing
ASTM C127	Standard Test Method for Density, Relative Density (Specific Gravity), and Absorption of Coarse Aggregate
ASTM C131	Standard Test Method for Resistance to Degradation of Small-Size Coarse Aggregate by Abrasion and Impact in the Los Angeles Machine
ASTM C136	Standard Test Method for Sieve or Screen Analysis of Fine and Coarse Aggregates
ASTM C183	Standard Practice for Sampling and the Amount of Testing of Hydraulic Cement
ASTM C566	Standard Test Method for Total Evaporable Moisture Content of Aggregate by Drying
ASTM D75	Standard Practice for Sampling Aggregates
ASTM D979	Standard Practice for Sampling Bituminous Paving Mixtures
ASTM D1073	Standard Specification for Fine Aggregate for Bituminous Paving Mixtures
ASTM D1074	Standard Test Method for Compressive Strength of Bituminous Mixtures
ASTM D1461	Standard Test Method for Moisture or Volatile Distillates in Bituminous Paving Mixtures
ASTM D2041	Standard Test Method for Theoretical Maximum Specific Gravity and Density of Bituminous Paving Mixtures
ASTM D2172	Standard Test Method for Quantitative Extraction of Bitumen from Bituminous Paving Mixtures
ASTM D2419	Standard Test Method for Sand Equivalent Value of Soils and Fine Aggregate
ASTM D2489	Standard Practice for Estimating Degree of Particle Coating of Bituminous-Aggregate Mixtures
ASTM D2726	Standard Test Method for Bulk Specific Gravity and Density of Non-Absorptive Compacted Bituminous Mixtures

ASTM D2950	Standard Test Method for Density of Bituminous Concrete in Place by Nuclear Methods
ASTM D3203	Standard Test Method for Percent Air Voids in Compacted Dense and Open Bituminous Paving Mixtures
ASTM D3665	Standard Practice for Random Sampling of Construction Materials
ASTM D3666	Standard Specification for Minimum Requirements for Agencies Testing and Inspecting Road and Paving Materials
ASTM D4125	Standard Test Methods for Asphalt Content of Bituminous mixtures by the Nuclear Method
ASTM D4318	Standard Test Methods for Liquid Limit, Plastic Limit, and Plasticity Index of Soils
ASTM D4791	Standard Test Method for Flat Particles, Elongated Particles, or Flat and Elongated Particles in Coarse Aggregate
ASTM D4867	Standard Test Method for Effect of Moisture on Asphalt Concrete Paving Mixtures
ASTM D5444	Standard Test Method for Mechanical Size Analysis of Extracted Aggregate
ASTM D5581	Standard Test Method for Resistance to Plastic Flow of Bituminous Mixtures Using Marshall Apparatus (6 inch-Diameter Specimen)
ASTM D6307	Standard Test Method for Asphalt Content of Hot-Mix Asphalt by Ignition Method
ASTM D6926	Standard Practice for Preparation of Bituminous Specimens Using Marshall Apparatus
ASTM D6927	Standard Test Method for Marshall Stability and Flow of Bituminous Mixtures
ASTM D6752	Standard Test Method for Bulk Specific Gravity and Density of Compacted Bituminous Mixtures Using Automatic Vacuum Sealing Method
ASTM E11	Standard Specification for Woven Wire Test Sieve Cloth and Test Sieves
ASTM E178	Standard Practice for Dealing with Outlying Observations
AASHTO T030	Standard Method of Test for Mechanical Analysis of Extracted Aggregate
AASHTO T110	Standard Method of Test for Moisture or Volatile Distillates in Hot Mix Asphalt (HMA)
AASHTO T275	Standard Method of Test for Bulk Specific Gravity (Gmb) of Compacted Hot Mix Asphalt (HMA) Using Paraffin-Coated Specimens).
Asphalt Institute Handbook MS-26 Asphalt Binder	

Asphalt Institute MS-2 Mix Design Manual, 7th Edition

MATERIAL REQUIREMENTS

ASTM D242	Standard Specification for Mineral Filler for Bituminous Paving Mixtures
ASTM D946	Standard Specification for Penetration-Graded Asphalt Cement for Use in Pavement Construction

ASTM D3381	Standard Specification for Viscosity-Graded Asphalt Cement for Use in Pavement Construction
ASTM D4552	Standard Practice for Classifying Hot-Mix Recycling Agents
ASTM D6373	Standard Specification for Performance Graded Asphalt Binder

END OF ITEM P-403

Item P-501MR Portland Cement Concrete (PCC) Pavement

DESCRIPTION

501MR-01 This work shall consist of pavement composed of Portland cement concrete (PCC), without reinforcement constructed on a prepared underlying surface in accordance with these specifications and shall conform to the lines, grades, thickness, and typical cross-sections shown on the plans.

MATERIALS

501MR-02 Aggregates.

a. Reactivity. Fine and Coarse aggregates to be used in all concrete shall be evaluated and tested by the Contractor for alkali-aggregate reactivity in accordance with both ASTM C1260 and ASTM C1567. Aggregate and mix proportion reactivity tests shall be performed for each project.

(1) Coarse and fine aggregate shall be tested separately in accordance with ASTM C1260. The aggregate shall be considered innocuous if the expansion of test specimens, tested in accordance with ASTM C1260, does not exceed 0.10% at 28 days (30 days from casting).

(2) Combined coarse and fine aggregate shall be tested in accordance with ASTM C1567, modified for combined aggregates, using the proposed mixture design proportions of aggregates, cementitious materials, and/or specific reactivity reducing chemicals. If lithium nitrate is proposed for use with or without supplementary cementitious materials, the aggregates shall be tested in accordance with Corps of Engineers (COE) Concrete Research Division (CRD) C662. If lithium nitrate admixture is used, it shall be nominal 30% ±0.5% weight lithium nitrate in water.

(3) If the expansion of the proposed combined materials test specimens, tested in accordance with ASTM C1567, modified for combined aggregates, or COE CRD C662, does not exceed 0.10% at 28 days, the proposed combined materials will be accepted. If the expansion of the proposed combined materials test specimens is greater than 0.10% at 28 days, the aggregates will not be accepted unless adjustments to the combined materials mixture can reduce the expansion to less than 0.10% at 28 days, or new aggregates shall be evaluated and tested.

b. Fine aggregate. Fine aggregate shall conform to the requirements of ASTM C33. Fineness modulus shall not be less than 2.50 nor more than 3.40. The soundness loss shall not exceed 10% when sodium sulfate is used or 15% when magnesium sulfate is used, after five cycles, when tested per ASTM C88.

The amount of deleterious material in the fine aggregate shall not exceed the following limits:

Limits for Deleterious Substances in Fine Aggregate for Concrete

Deleterious material	ASTM	Percentage by Mass
Clay Lumps and friable particles	ASTM C142	1.0
Material finer than 0.075mm (No. 200 sieve)	ASTM C117	3.0
Lightweight particles	ASTM C123 using a medium with a density of Sp. Gr. of 2.0	0.5
Total of all deleterious Material		3.0

c. Coarse aggregate. Aggregates delivered to the mixer shall consist of crushed stone, crushed or uncrushed gravel, or a combination. The aggregates should be free of ferrous sulfides, such as pyrite, that would cause "rust" staining that can bleed through pavement markings. Steel blast furnace slag shall not be permitted. The aggregate shall be composed of clean, hard, uncoated particles. Dust and other coating shall be removed from the aggregates by washing.

The percentage of wear shall be no more than 40 when tested in accordance with ASTM C131.

The quantity of flat, elongated, and flat and elongated particles in any size group coarser than 3/8 sieve (9 mm) shall not exceed 8% by weight when tested in accordance with ASTM D4791. A flat particle is defined as one having a ratio of width to thickness greater than 5. An elongated particle is one having a ratio of length to width greater than 5.

The soundness loss shall not exceed 12% when sodium sulfate is used or 18% when magnesium sulfate is used, after five cycles, when tested per ASTM C88.

The amount of deleterious material in the coarse aggregate shall not exceed the following limits:

Limits for Deleterious Substances in Coarse Aggregate for Concrete

Deleterious material	ASTM	Percentage by Mass
Clay Lumps and friable particles	ASTM C142	1.0
Material finer than No. 200 sieve (0.075mm)	ASTM C117	1.0
Lightweight particles	ASTM C123 using a medium with a density of Sp. Gr. of 2.0	0.5
Chert (less than 2.40 Sp Gr.)	ASTM C123 using a medium with a density of Sp. Gr. of 2.40)	1.0
Total of all deleterious Material		3.0

(1) Aggregate susceptibility to durability (D) cracking. Aggregates that have a history of D-cracking shall not be used.

Coarse aggregate may be accepted from sources that have a 20 year service history for the same gradation to be supplied with no durability issues. Aggregates that do not have a record of 20 years of service without major repairs (less than 5% of slabs replaced) in similar conditions without D-cracking shall not be used unless it meets the following:

(a) Material currently being produced shall have a durability factor ≥ 95 using ASTM C666 procedure B. Coarse aggregates that are crushed granite, calcite cemented sandstone, quartzite, basalt, diabase, rhyolite or trap rock are considered to meet the D-cracking test but must meet all other quality tests. Aggregates meeting State Highway Department material specifications may be acceptable.

(b) The Contractor shall submit a current certification that the aggregate does not have a history of D-cracking and that the aggregate meets the state specifications for use in PCC pavement for use on interstate highways. Certifications, tests and any history reports must be for the same gradation as being proposed for use on the project. Certifications which are not dated or which are over one (1) year old or which are for different gradations will not be accepted. Test results will only be accepted when tests were performed by a State Department of Transportation (DOT) materials laboratory or an accredited laboratory.

c. Combined aggregate gradation. The combined aggregate grading shall meet the following requirements:

(a) The materials selected and the proportions used shall be such that when the Coarseness Factor (CF) and the Workability Factor (WF) are plotted on a diagram as described in d. below, the point thus determined shall fall within the parallelogram described therein.

(b) The CF shall be determined from the following equation:

CF = (cumulative percent retained on the 3/8 in. sieve)(100) / (cumulative percent retained on the No. 8 sieve)

(c) The Workability Factor WF is defined as the percent passing the No. 8 sieve based on the combined gradation. However, WF shall be adjusted, upwards only, by 2.5 percentage points for each 94 pounds of cementitious material per cubic meter yard greater than 564 pounds per cubic yard.

(d) A diagram shall be plotted using a rectangular scale with WF on the Y-axis with units from 20 (bottom) to 45 (top), and with CF on the X-axis with units from 80 (left side) to 30 (right side). On this diagram a parallelogram shall be plotted with corners at the following coordinates (CF-75, WF-28), (CF-75, WF-40), (CF-45, WF-32.5), and (CF-45, WF-44.5). If the point determined by the intersection of the computed CF and WF does not fall within the above parallelogram, the grading of each size of aggregate used and the proportions selected shall be changed as necessary.

501MR-03 Cement. Cement shall conform to the requirements of ASTM C150 Type I or Type II.

If cement becomes partially set or contains lumps of caked cement, it shall be rejected. Cement salvaged from discarded or used bags shall not be used.

501MR-04 Cementitious materials.

a. Fly ash. Fly ash shall meet the requirements of ASTM C618, with the exception of loss of ignition, where the maximum shall be less than 6%. Fly ash for use in mitigating alkali-silica reactivity shall have a Calcium Oxide (CaO) content of less than 13% and a total available alkali content less than 3% per ASTM

C311. Fly ash produced in furnace operations using liming materials or soda ash (sodium carbonate) as an additive shall not be acceptable. The Contractor shall furnish the previous three most recent, consecutive ASTM C618 reports for each source of fly ash proposed in the mix design, and shall furnish each additional report as they become available during the project. The reports can be used for acceptance or the material may be tested independently by the Engineer.

b. Slag cement (ground granulated blast furnace (GGBF)). Slag cement shall conform to ASTM C989, Grade 100 or Grade 120.

c. Raw or calcined natural pozzolan. Natural pozzolan shall be raw or calcined and conform to ASTM C618, Class N, including the optional requirements for uniformity and effectiveness in controlling Alkali-Silica reaction and shall have a loss on ignition not exceeding 6%. Class N pozzolan for use in mitigating Alkali-Silica Reactivity shall have a total available alkali content less than 3%.

d. Ultrafine fly ash and ultrafine pozzolan. UltraFine Fly Ash (UFFA) and UltraFine Pozzolan (UFP) shall conform to ASTM C618, Class F or N, and the following additional requirements:

(1) The strength activity index at 28 days of age shall be at least 95% of the control specimens.

(2) The average particle size shall not exceed 6 microns.

501MR-05 Joint seal. The joint seal for the joints in the concrete pavement shall be preformed polychloroprene compression seals that meet the requirements of Item P-604MR and shall be as specified in the plans.

501MR-06 Isolation joint filler. Premolded joint filler for isolation joints shall conform to the requirements of ASTM D1751 and shall be where shown on the plans. The filler for each joint shall be furnished in a single piece for the full depth and width required for the joint, unless otherwise approved by the Engineer. When the use of more than one piece is required for a joint, the abutting ends shall be fastened securely and held accurately to shape by taping or other positive fastening means satisfactory to the Engineer.

501MR-07 Dowel and tie bars. Dowel bars shall be plain steel bars conforming to ASTM A615 and shall be free from burring or other deformation restricting slippage in the concrete. Before delivery to the construction site each dowel bar shall be epoxy coated per ASTM A1078. The dowels shall be coated with a bond-breaker recommended by the manufacturer. Dowel sleeves or inserts are not permitted. Grout retention rings shall be fully circular metal or plastic devices capable of supporting the dowel until the grout hardens.

Tie bars shall be deformed steel bars and conform to the requirements of ASTM A615. Tie bars designated as Grade 60 in ASTM A615 or ASTM A706 shall be used for construction requiring bent bars.

501MR-08 Water. Water used in mixing or curing shall be potable, clean, free of oil, salt, acid, alkali, sugar, vegetable, or other substances injurious to the finished product, except that non-potable water, or water from concrete production operations, may be used if it meets the requirements of ASTM C1602.

501MR-09 Material for curing concrete. Curing materials shall conform to one of the following specifications. Prevent water used for curing operations from infiltrating through the pavement or shoulders.

a. Liquid membrane-forming compounds for curing concrete shall conform to the requirements of ASTM C309, Type 2, Class A wax base only.

b. Polyethylene film for curing concrete shall conform to the requirements of ASTM C171.

c. Burlap-polyethylene sheeting shall be used for curing concrete. The curing materials shall be shall conform to the requirements of ASTM C171.

501MR-10 Admixtures. The Contractor shall submit certificates indicating that the material to be furnished meets all of the requirements indicated below. In addition, the Engineer may require the Contractor to submit complete test data from an approved laboratory showing that the material to be furnished meets all of the requirements of the cited specifications. Subsequent tests may be made of samples taken by the Engineer from the supply of the material being furnished or proposed for use on the work to determine whether the admixture is uniform in quality with that approved.

a. Air-entraining admixtures. Air-entraining admixtures shall meet the requirements of ASTM C260 and shall consistently entrain the air content in the specified ranges under field conditions. The air-entrainment agent and any water reducer admixture shall be compatible.

b. Water-reducing admixtures. Water-reducing admixture shall meet the requirements of ASTM C494, Type A, B, or D. ASTM C494, Type F and G high range water reducing admixtures and ASTM C1017 flowable admixtures shall not be used.

c. Other admixtures. The use of set retarding, and set-accelerating admixtures shall be approved by the Engineer. Retarding shall meet the requirements of ASTM C494, Type A, B, or D and set-accelerating shall meet the requirements of ASTM C494, Type C. Calcium chloride and admixtures containing calcium chloride shall not be used.

d. Lithium Nitrate. The lithium admixture shall be a nominal 30% aqueous solution of Lithium Nitrate, with a density of 10 pounds/gallon, and shall have the approximate chemical form as shown below:

Constituent	Limit (Percent by Mass)
LiNO3 (Lithium Nitrate)	30 ±0.5
SO4 (Sulfate Ion)	0.1 (max)
Cl (Chloride Ion)	0.2 (max)
Na (Sodium Ion)	0.1 (max)
K (Potassium Ion)	0.1 (max)

Provide a trained manufacturer's representative to supervise the lithium nitrate admixture dispensing and mixing operations.

501MR-11 Epoxy-resin. All epoxy-resin materials shall be two-component materials conforming to the requirements of ASTM C881, Class as appropriate for each application temperature to be encountered, except that in addition, the materials shall meet the following requirements:

a. Material for use for embedding dowels and anchor bolts shall be Type IV, Grade 3.

b. Material for use as patching materials for complete filling of spalls and other voids and for use in preparing epoxy resin mortar shall be Type III, Grade as approved.

c. Material for use for injecting cracks shall be Type IV, Grade 1.

d. Material for bonding freshly mixed Portland cement concrete or mortar or freshly mixed epoxy resin concrete or mortar to hardened concrete shall be Type V, Grade as approved.

501MR-12 Bond-breaker. A Rosin Paper bond-breaker shall be used between layers as indicated on the plans.

501MR-13 Bag mix. An approved non-shrink grout prepared according to the manufacturer's instructions shall be used for repairs.

501MR-14 Material acceptance. Prior to use of materials, the Contractor shall submit certified test reports to the Engineer for those materials proposed for use during construction. The certification shall show the appropriate ASTM test for each material, the test results, and a statement that the material passed or failed.

The Engineer may request samples for testing, prior to and during production, to verify the quality of the materials and to ensure conformance with the applicable specifications.

MIX DESIGN

501MR-15. General. No concrete shall be placed until the mix design has been approved by the FAA. The FAA's review shall not relieve the Contractor of the responsibility to select and proportion the materials to comply with this section.

501MR-16 Cementitious materials.

a. Fly ash. When fly ash is used as a partial replacement for cement, the replacement rate shall be determined from laboratory trial mixes, and shall be between 20 and 30% by weight of the total cementitious material. If fly ash is used in conjunction with slag cement the maximum replacement rate shall not exceed 10% by weight of total cementitious material.

b. Slag cement (ground granulated blast furnace (GGBF)). Slag cement may be used. The slag cement, or slag cement plus fly ash if both are used, may constitute between 25 to 55% of the total cementitious material by weight.

c. Raw or calcined natural pozzolan. Natural pozzolan may be used in the mix design. When pozzolan is used as a partial replacement for cement, the replacement rate shall be determined from laboratory trial mixes, and shall be between 20 and 30% by weight of the total cementitious material. If pozzolan is used in conjunction with slag cement the maximum replacement rate shall not exceed 10% by weight of total cementitious material.

d. Ultrafine fly ash (UFFA) and ultrafine pozzolan (UFP). UFFA and UFP may be used in the mix design with the Engineer's approval. When UFFA and UFP is used as a partial replacement for cement, the replacement rate shall be determined from laboratory trial mixes, and shall be between seven (7) and 16% by weight of the total cementitious material

501MR-17 Admixtures.

a. Air-entraining admixtures. Air-entraining admixture are to be added in such a manner that will ensure uniform distribution of the agent throughout the batch. The air content of freshly mixed air-entrained concrete shall be based upon trial mixes with the materials to be used in the work adjusted to produce concrete of the required plasticity and workability. The percentage of air in the mix shall be 6.0%. Air content shall be determined by testing in accordance with ASTM C231 for gravel and stone coarse aggregate and ASTM C173 for slag and other highly porous coarse aggregate.

b. Water-reducing admixtures. Water-reducing admixtures shall be added to the mix in the manner recommended by the manufacturer and in the amount necessary to comply with the specification requirements. Tests shall be conducted on trial mixes, with the materials to be used in the work, in accordance with ASTM C494.

c. Other admixtures. Set controlling, and other approved admixtures shall be added to the mix in the manner recommended by the manufacturer and in the amount necessary to comply with the specification requirements. Tests shall be conducted on trial mixes, with the materials to be used in the work, in accordance with ASTM C 494.

d. Lithium nitrate. Lithium nitrate shall be added to the mix in the manner recommended by the manufacturer and in the amount necessary to comply with the specification requirements in accordance with paragraph 501MR-10d.

CONSTRUCTION METHODS

501MR-18 Equipment. Equipment necessary for handling materials and performing all parts of the work shall be approved by the Engineer, but does not relieve the Contractor of the responsibility for the selection of the proper equipment, proper operation of equipment, and maintaining the equipment in good working condition. The contractor shall submit construction equipment list for approval by the Engineer. The equipment shall be at the jobsite sufficiently ahead of the start of paving operations to be examined thoroughly and approved.

Prior to placement of concrete, the Contractor and the Engineer shall inspect the work site and any previously placed concrete for conformance to the plans and specifications. Items to be inspected shall include, but not be limited to:

- Subgrade, subbase, or base
- Forms
- Stringlines or other guides
- Paving equipment
- QC testing and inspection preparations
- Dowels, joint filler materials, and other preparations for joints
- Reinforcement
- Appurtenances
- Previously placed concrete

Each item shall be recorded on a pre-pour agreement form as conforming or not conforming with plans and specifications. The pre-pour agreement shall also indicate the date and specific location of the concrete placement. Both the Contractor and Engineer shall agree concerning the conformance of all items to the plans and specifications before signing the pre-pour agreement. Do not proceed with placement of concrete until all items conform to the plans and specifications and the pre-pour agreement is signed by both the Contractor and Engineer.

a. Batch plant and equipment. The batch plant and equipment shall conform to the requirements of ASTM C94.

b. Mixers and transportation equipment.

(1) General. Concrete may be mixed at a central plant, or wholly or in part in truck mixers. Each mixer shall have attached in a prominent place a manufacturer's nameplate showing the capacity of the drum in terms of volume of mixed concrete and the speed of rotation of the mixing drum or blades.

(2) Central plant mixer. Central plant mixers shall conform to the requirements of ASTM C94. The mixer shall be examined daily for changes in condition due to accumulation of hard concrete or mortar or wear of blades. The pickup and throwover blades shall be replaced when they have worn down 3/4 inch or more. The Contractor shall have a copy of the manufacturer's design on hand showing dimensions and arrangement of blades in reference to original height and depth.

(3) Truck mixers and truck agitators. Truck mixers used for mixing and hauling concrete and truck agitators used for hauling central-mixed concrete shall conform to the requirements of ASTM C94.

(4) Nonagitator trucks. Nonagitating hauling equipment shall conform to the requirements of ASTM C94.

(5) Pumping and other conveying equipment. Pumping and any other necessary concrete conveying equipment shall comply with the requirements for conveying and depositing concrete in ACI 318. Pumping operations shall comply with ACI 304R and ACI 304.2R. Pumping must not result in separation or loss of materials nor cause interruptions sufficient to permit loss of plasticity between successive increments. Loss of slump in pumping equipment must not exceed inches at discharge/placement. Do not convey concrete through pipe made of aluminum or aluminum alloy. Avoid rapid changes in pipe sizes. Limit maximum size of coarse aggregate to 33 percent of the diameter of the pipe. Take samples for testing at both the point of delivery to the pump and at the discharge end.

c. Finishing equipment. Concrete pavement shall be placed with approved placement and finishing equipment using stationary side forms. Hand screeding and float finishing shall be used. Use of roller screeds or other equipment or methods that generate excessive paste at the surface shall not be permitted.

d. Vibrators. Hand held vibrators shall be used and shall meet the recommendations of ACI 309R, Guide for Consolidation of Concrete.

e. Concrete saws. The Contractor shall provide sawing equipment adequate in number of units and power to complete the sawing to the required dimensions. The Contractor shall provide at least one standby saw in good working order and a supply of saw blades at the site of the work at all times during sawing operations. Early-entry saws may be used, subject to demonstration and approval of the Engineer.

f. Side forms. Straight side forms shall be made of either wood or steel. If steel forms are used they shall be furnished in sections not less than 10 feet in length. Forms shall have a depth equal to the pavement thickness at the edge, and a base width equal to or greater than the depth. Forms shall be provided with adequate devices for secure settings so that when in place they will withstand, without visible spring or settlement, the impact and vibration of the consolidating and finishing equipment. Forms with battered top surfaces and bent, twisted or broken forms shall not be used. Built-up forms shall not be used, except as approved by the Engineer. The top face of the form shall not vary from a true plane more than 1/8 inch in 10 feet, and the upstanding leg shall not vary more than 1/4 inch. The forms shall contain provisions for locking the ends of abutting sections together tightly for secure setting.

501MR-19 Form setting. Forms shall be set sufficiently in advance of the concrete placement to ensure continuous paving operation. Wooden forms must be set with kickers. Forms must be secured to the underlying layer. Forms must be set in such a manner to avoid damage to sublayers. Pins cannot be used to set the forms on stabilized materials. Nails size 10d (penny) or smaller must be used to secure forms to stabilized materials. After the forms have been set to correct grade, the underlying surface shall be thoroughly tamped, either mechanically or by hand, at both the inside and outside edges of the base of the forms. Forms shall be staked into place sufficiently to maintain the form in position for the method of placement.

Form sections shall be tightly locked and shall be free from play or movement in any direction. The forms shall not deviate from true line by more than 1/8 inch (3 mm) at any joint. Forms shall be so set that they will withstand, without visible spring or settlement, the impact and vibration of the consolidating and finishing equipment. Forms shall be cleaned and oiled prior to the placing of concrete.

The alignment and grade elevations of the forms shall be checked and corrections made by the Contractor immediately before placing the concrete.

501MR-20 Conditioning of underlying surface, side-form and fill-in lane construction. The prepared underlying surface shall be moistened with water, without saturating, immediately ahead of concrete placement to prevent rapid loss of moisture from the concrete. Damage caused by hauling or usage of other equipment shall be corrected and retested to the satisfaction of the Engineer. If damage occurs to a stabilized subbase, it shall be corrected full depth by the Contractor. The underlying surface shall be protected so that

it will be entirely free from frost when the concrete is placed. The use of chemicals to eliminate frost in the underlying surface shall not be permitted.

501MR-21 Handling, measuring, and batching material. The batch plant site, layout, equipment, and provisions for transporting material shall assure a continuous supply of material to the work. Stockpiles shall be constructed in such a manner that prevents segregation and intermixing of deleterious materials. Aggregates from different sources shall be stockpiled, weighed and batched separately at the concrete batch plant.

Aggregates that have become segregated or mixed with earth or foreign material shall not be used. All aggregates produced or handled by hydraulic methods, and washed aggregates, shall be stockpiled or binned for draining at least 12 hours before being batched. Rail shipments requiring more than 12 hours will be accepted as adequate binning only if the car bodies permit free drainage.

Batching plants shall be equipped to proportion aggregates and bulk cement, by weight, automatically using interlocked proportioning devices of an approved type. When bulk cement is used, the Contractor shall use a suitable method of handling the cement from weighing hopper to transporting container or into the batch itself for transportation to the mixer, such as a chute, boot, or other approved device, to prevent loss of cement. The device shall be arranged to provide positive assurance that the cement content specified is present in each batch.

501MR-22 Mixing concrete. The concrete may be mixed in a central mix plant or in truck mixers. The mixer shall be of an approved type and capacity. Mixing time shall be measured from the time the first cementitious material is added into the mixer. All concrete shall be mixed and delivered to the site in accordance with the requirements of ASTM C94.

Mixed concrete from the central mixing plant shall be transported in truck mixers, truck agitators, or non-agitating trucks. The elapsed time from the addition of cementitious material to the mix until the concrete is deposited in place at the work site shall not exceed 30 minutes when the concrete is hauled in non-agitating trucks, nor 90 minutes when the concrete is hauled in truck mixers or truck agitators. Retempering concrete by adding water or by other means will not be permitted. With transit mixers additional water may be added to the batch materials and additional mixing performed to increase the slump to meet the specified requirements provided the addition of water is performed within 45 minutes after the initial mixing operations and provided the water/cementitious ratio specified in the approved mix design is not exceeded, and approved by the Engineer.

501MR-23 Limitations on mixing and placing. No concrete shall be mixed, placed, or finished if the lighting is insufficient.

a. Cold weather. Unless authorized in writing by the Engineer, mixing and concreting operations shall be discontinued when a descending air temperature in the shade and away from artificial heat reaches 40°F and shall not be resumed until an ascending air temperature in the shade and away from artificial heat reaches 35°F.

The aggregate shall be free of ice, snow, and frozen lumps before entering the mixer. The temperature of the mixed concrete shall not be less than 50°F at the time of placement. Concrete shall not be placed on frozen material nor shall frozen aggregates be used in the concrete.

When concreting is authorized during cold weather, water and/or the aggregates may be heated to not more than 150°F. The apparatus used shall heat the mass uniformly and shall be arranged to preclude the possible occurrence of overheated areas which might be detrimental to the materials.

b. Hot weather. During periods of hot weather when the maximum daily air temperature exceeds 85°F, the following precautions shall be taken.

The forms and/or the underlying surface shall be sprinkled with water immediately before placing the concrete. The concrete shall be placed at the coolest temperature practicable, and in no case shall the temperature of the concrete when placed exceed 90°F. The aggregates and/or mixing water shall be cooled as necessary to maintain the concrete temperature at or not more than the specified maximum.

The finished surfaces of the newly laid pavement shall be kept damp by applying a water-fog or mist with approved spraying equipment until the pavement is covered by the curing medium. Protect the concrete from plastic shrinkage cracking when an evaporation rate in excess of 0.2 psf per hour. If plastic cracking can be expected, or if any plastic cracking begins to occur, the Contractor shall take such additional measures as necessary to protect the concrete surface. Such measures shall consist of fog sprays or similar measures commencing immediately behind the paver. If these measures are not effective in preventing plastic cracking, paving operations shall be immediately stopped.

501MR-24 Placing concrete. At any point in concrete conveyance, the free vertical drop of the concrete from one point to another or to the underlying surface shall not exceed 3 feet. The finished concrete product must be dense and homogeneous, without segregation and conforming to the standards in this specification. Backhoes and grading equipment shall not be used to distribute the concrete in front of the paver. Front end loaders will not be used. All concrete shall be consolidated without voids or segregation, including under and around all load-transfer devices, joint assembly units, and other features embedded in the pavement. No equipment is permitted on adjoining previously constructed pavement.

a. Side-form construction. Side form sections shall be straight, free from warps, bends, indentations, or other defects. Defective forms shall be removed from the work. Metal or wooden side forms shall be used.

Width of the base of all forms shall be equal to or greater than the specified pavement thickness.

Side forms shall be of sufficient rigidity, both in the form and in the interlocking connection with adjoining forms, that springing will not occur under the weight of equipment or from the pressure of the concrete. The Contractor shall provide sufficient forms so that there will be no delay in placing concrete due to lack of forms.

Before placing side forms, the underlying material shall be at the proper grade. Side forms shall have full bearing upon the foundation throughout their length and width of base and shall be placed to the required grade and alignment of the finished pavement. They shall be firmly supported during the entire operation of placing, compacting, and finishing the pavement.

Forms shall be drilled in advance of being placed to line and grade to accommodate tie bars where these are specified.

Immediately in advance of placing concrete and after all subbase operations are completed, side forms shall be trued and maintained to the required line and grade for a distance sufficient to prevent delay in placing.

Side forms shall remain in place at least 12 hours after the concrete has been placed, and in all cases until the edge of the pavement no longer requires the protection of the forms. After stripping of forms, the sides of the slab shall be cured in the same manner as the top surface of the slab.

Side forms shall be thoroughly cleaned and oiled each time they are used and before concrete is placed against them.

Concrete shall be spread, screeded, shaped and consolidated by hand so that the concrete is uniformly distributed and consolidated without segregation. The completed pavement shall conform to the required cross-section.

Concrete for the paving shall be effectively consolidated by hand held vibrators without causing segregation.

c. Consolidation. Concrete shall be consolidated by approved hand-operated immersion vibrators. The vibrators shall be inserted into the concrete to a depth that will provide the best full-depth consolidation but not closer to the underlying material than two inches. Excessive vibration shall not be permitted. Vibrators shall not be used to transport or spread the concrete. Hand-operated vibrators shall not be operated in the concrete at one location for more than 20 seconds. Insertion locations for hand-operated vibrators shall be between 6 to 15 inches on centers. For each paving train, at least one additional vibrator spud, or sufficient parts for rapid replacement and repair of vibrators shall be maintained at the paving site at all times. Any evidence of inadequate consolidation (honeycomb along the edges, large air pockets, or any other evidence) shall require the immediate stopping of the paving operation and adjustment of the equipment or procedures as approved by the Engineer.

Thickness cores will be evaluated for surface paste, uniformity of aggregate distribution, segregation, voids, and thickness. Density determinations will be made at the discretion of and by the Engineer based on the water content of the core as taken. ASTM C642 shall be used for the determination of core density in the saturated-surface dry condition.

The average density of the cores shall be at least 97% of the original mix design density as determined by unit weight (ASTM C138), with no cores having a density of less than 96% of the original mix design density. Failure to meet the referee tests will be considered evidence that the minimum requirements for vibration are inadequate for the job conditions. Additional vibrating units or other means of increasing the effect of vibration shall be employed so that the density of the hardened concrete conforms to the above requirements.

501MR-25 Strike-off of concrete. Following the placing of the concrete, it shall be struck off to conform to the cross-section shown on the plans and to an elevation that when the concrete is properly consolidated and finished, the surface of the pavement shall be at the elevation shown on the plans.

501MR-26 Joints. Joints shall be constructed as shown on the plans and in accordance with the following requirements:

a. Construction. Construction joints shall be constructed with their faces perpendicular to the surface of the pavement and finished or edged as shown on the plans. Construction joints shall not vary more than 1/2 inch from their designated position and shall be true to line with not more than 1/4 inch variation in 10 feet. Joint lines shall be continuous and true across successive lanes. The concrete surface will be scanned using NAPTF 3D scanning equipment to determine any irregularities. All joints shall be so prepared, finished, or cut to provide a groove of uniform width and depth as shown on the plans.

Longitudinal construction joints shall be formed against side forms as shown in the plans.

Transverse construction joints shall be installed at the end of each day's placing operations and at any other points within a paving lane when concrete placement is interrupted for more than 30 minutes or it appears that the concrete will obtain its initial set before fresh concrete arrives. The installation of the joint shall be located at a planned contraction or expansion joint. If placing of the concrete is stopped, the Contractor shall remove the excess concrete back to the previous planned joint.

b. Contraction. Contraction joints shall be constructed with their faces perpendicular to the surface of the pavement and finished or edged as shown on the plans. Contraction joints shall not vary more than 1/2 inch from their designated position and shall be true to line with not more than 1/4 inch variation in 10 feet. The concrete surface will be scanned using NAPTF 3D scanning equipment to determine any irregularities. Contraction joints shall be so prepared, finished, or cut to provide a groove of uniform width and depth as shown on the plans.

Contraction joints shall be installed at the locations and spacing as shown on the plans. Contraction joints shall be installed to the dimensions required by sawing a groove into the concrete surface after the concrete has hardened. The groove shall be finished or cut clean so that spalling will be avoided at intersections with other joints. Grooving or sawing shall produce a slot at least 1/8 inch wide and to the depth shown on the plans.

c. Isolation (expansion). Isolation joints shall be constructed with their faces perpendicular to the surface of the pavement and finished or edged as shown on the plans. Isolation joints shall not vary more than 1/2 inch from their designated position and shall be true to line with not more than 1/4 inch variation in 10 feet. The concrete surface will be scanned using NAPTF 3D scanning equipment to determine any irregularities. Isolation joints shall be so prepared, finished, or cut to provide a groove of uniform width and depth as shown on the plans.

Isolation joints shall be installed as shown on the plans. The pre-molded filler of the thickness as shown on the plans, shall extend for the full depth and width of the slab at the joint, except for space for sealant at the top of the slab. The filler shall be securely staked or fastened into position perpendicular to the proposed finished surface. A cap shall be provided to protect the top edge of the filler and to permit the concrete to be placed and finished. After the concrete has been placed and struck off, the cap shall be carefully withdrawn leaving the space over the premolded filler. The edges of the joint shall be finished and tooled while the concrete is still plastic. Any concrete bridging the joint space shall be removed for the full width and depth of the joint.

d. Tie bars. Tie bars shall consist of deformed bars installed in joints as shown on the plans. Tie bars shall be placed at right angles to the centerline of the concrete slab and shall be spaced at intervals shown on the plans. They shall be held in position parallel to the pavement surface and in the middle of the slab depth. When tie bars extend into an unpaved lane, they may be bent against the form at longitudinal construction joints, unless threaded bolt or other assembled tie bars are specified. Tie bars shall not be painted, greased, or enclosed in sleeves.

e. Dowel bars. Dowel bars shall be placed across joints as shown on the plans. They shall be of the dimensions and spacings as shown and held rigidly in the middle of the slab depth in the proper horizontal and vertical alignment by an approved assembly device to be left permanently in place. The dowel or load-transfer and joint devices shall be rigid enough to permit complete assembly as a unit ready to be lifted and placed into position. The dowels shall be coated on one end with a bond-breaker or other lubricant recommended by the manufacturer and approved by the Engineer.

f. Placing dowels and tie bars. The method used in installing and holding dowels in position shall ensure that the error in alignment of any dowel from its required horizontal and vertical alignment after the pavement has been completed will not be greater than 1/8 inch per feet. Except as otherwise specified below, horizontal spacing of dowels shall be within a tolerance of ±5/8 inch. The vertical location on the face of the slab shall be within a tolerance of ±1/2 inch. The vertical alignment of the dowels shall be measured parallel to the designated top surface of the pavement, except for those across the crown or other grade change joints. Dowels across crowns and other joints at grade changes shall be measured to a level surface. Horizontal alignment shall be checked perpendicular to the joint edge. The horizontal alignment shall be checked with a framing square. Dowels and tie bars shall not be placed closer than 0.6 times the dowel bar or tie bar length to the planned joint line. If the last regularly spaced longitudinal dowel or tie bar is closer than that dimension, it shall be moved away from the joint to a location 0.6 times the dowel bar or tie bar length, but not closer than 6 inches to its nearest neighbor. The portion of each dowel intended to move within the concrete or expansion cap shall be wiped clean and coated with a thin, even film of lubricating oil or light grease before the concrete is placed. Dowels shall be spaced as indicated in the project plans and installed as specified in the following subparagraphs.

(1) Contraction joints. Dowels and tie bars in longitudinal and transverse contraction joints within the paving lane shall be held securely in place, as indicated, by means of rigid metal frames or basket assemblies of an approved type. The basket assemblies shall be held securely in the proper location by means of suitable pins or anchors. Do not cut or crimp the dowel basket tie wires.

(2) Construction joints. Install dowels and tie bars by the cast-in- place or the drill-and-dowel method. Installation by removing and replacing in preformed holes will not be permitted. Dowels and tie bars shall be prepared and placed across joints where indicated, correctly aligned, and securely held in the proper horizontal and vertical position during placing and finishing operations, by means of devices fastened to the forms. The spacing of dowels and tie bars in construction joints shall be as indicated.

(3) Dowels installed in hardened concrete. Install dowels for isolation joints and in other hardened concrete by bonding the dowels into holes drilled into the hardened concrete. The concrete shall have cured for seven days or reached a minimum and reached a minimum compressive strength of 2500 psi before drilling commences. Holes 1/8 inch greater in diameter than the dowels shall be drilled into the hardened concrete using rotary-core drills. Rotary-percussion drills may be used, provided that excessive spalling does not occur to the concrete joint face. Modification of the equipment and operation shall be required if, in the Engineer's opinion, the equipment and/or operation is causing excessive damage. Depth of dowel hole shall be within a tolerance of ±1/2 inch of the dimension shown on the drawings. On completion of the drilling operation, the dowel hole shall be blown out with oil-free, compressed air. Dowels shall be bonded in the drilled holes using epoxy resin. Epoxy resin shall be injected at the back of the hole before installing the dowel and extruded to the collar during insertion of the dowel so as to completely fill the void around the dowel. Application by buttering the dowel will not be permitted. The dowels shall be held in alignment at the collar of the hole, after insertion and before the grout hardens, by means of a suitable metal or plastic grout retention ring fitted around the dowel. Dowels required to be installed in any joints between new and existing concrete shall be grouted in holes drilled in the existing concrete, all as specified above.

g. Sawing of joints. Joints shall be cut as shown on the plans. Equipment shall be as described in paragraph 501MR-18. The circular cutter shall be capable of cutting a groove in a straight line and shall produce a slot at least 1/8 inch wide and to the depth shown on the plans. The top of the slot shall be widened by sawing to provide adequate space for joint sealers as shown on the plans. Sawing shall commence, without regard to day or night, as soon as the concrete has hardened sufficiently to permit cutting without chipping, spalling, or tearing and before uncontrolled shrinkage cracking of the pavement occurs and shall continue without interruption until all joints have been sawn. The joints shall be sawn at the required spacing. All slurry and debris produced in the sawing of joints shall be removed by vacuuming and washing. Curing compound or system shall be reapplied in the initial sawcut and maintained for the remaining cure period. If access to the project site is required outside of normal working hours for sawing joints, site access must be pre-coordinated as per section 40MR.

501MR-27 Finishing. Finishing operations shall be a continuing part of placing operations starting immediately behind the strike-off of the concrete. Initial finishing shall be provided by the transverse screed or extrusion plate. The sequence of operations shall be transverse finishing, straightedge finishing, texturing, and then edging of joints. Finishing shall be by the hand method. Any operations which produce more than 1/8 inch of mortar-rich surface (defined as deficient in plus U.S. No. 4 sieve size aggregate) shall be halted immediately and the equipment, mixture, or procedures modified as necessary. Compensation shall be made for surging behind the screeds or extrusion plate and settlement during hardening and care shall be taken to ensure that the finished surface of the concrete (not just the cutting edges of the screeds) will be at the required line and grade. Finishing equipment and tools shall be maintained clean and in an approved condition. At no time shall water be added to the surface of the slab with the finishing equipment or tools.

a. Machine finishing with fixed forms. The machine shall be designed to straddle the forms and shall be operated to screed and consolidate the concrete. Machines that cause displacement of the forms shall be replaced. The machine shall make only one pass over each area of pavement. If the equipment and procedures do not produce a surface of uniform texture, true to grade, in one pass, the operation shall be immediately stopped and the equipment, mixture, and procedures adjusted as necessary.

b. Other types of finishing equipment. Clary screeds, other rotating tube floats shall not be used for concrete paving. Bridge deck finishers shall have a minimum operating weight of 7500 pounds and shall have a transversely operating carriage containing a knock-down auger and a minimum of two immersion vibrators. The acceptance of all finishing equipment is subject to the Engineer's approval.

c. Hand finishing. Hand finishing methods shall be as specified below.

(1) Equipment and screed. Provide a strike-off and tamping screed and a longitudinal float for hand finishing. The screed shall be at least one foot longer than the width of pavement being finished, of an approved design, and sufficiently rigid to retain its shape, and shall be constructed of metal or other suitable material shod with metal. The longitudinal float shall be at least 10 feet long, of approved design, and rigid and substantially braced, and shall maintain a plane surface on the bottom. Grate tampers (jitterbugs) shall not be used.

(2) Finishing and floating. As soon as placed and vibrated, the concrete shall be struck off and screeded to the such elevation above grade that when consolidated and finished, the surface of the pavement will be at the required elevation. In addition to previously specified complete coverage with handheld immersion vibrators, the entire surface shall be tamped with the strike-off and tamping template, and the tamping operation continued until the required compaction and reduction of internal and surface voids are accomplished. Immediately following the final tamping of the surface, the pavement shall be floated longitudinally from bridges resting on the side forms and spanning but not touching the concrete. If necessary, additional concrete shall be placed, consolidated and screeded, and the float operated until a satisfactory surface has been produced. The floating operation shall be advanced not more than half the length of the float and then continued over the new and previously floated surfaces.

d. Straightedge testing and surface correction. After the pavement has been struck off and while the concrete is still plastic, The concrete surface will be scanned using NAPTF 3D scanning equipment to determine any irregularities. The straightedge shall be held in contact with the surface in successive positions parallel to the centerline and the whole area gone over from one side of the slab to the other, as necessary. Advancing shall be in successive stages of not more than one-half the length of the straightedge. Any excess water and laitance in excess of 1/8 inch thick shall be removed from the surface of the pavement and wasted. Any depressions shall be immediately filled with freshly mixed concrete, struck off, consolidated, and refinished. High areas shall be cut down and refinished. Straightedge testing and surface corrections shall continue until the entire surface is found to be free from observable departures from the straightedge and until the slab conforms to the required grade and cross-section. The use of long-handled wood floats shall be confined to a minimum; they may be used only in emergencies and in areas not accessible to finishing equipment.

501MR-28 Surface texture. The surface of the pavement shall be finished with a burlap drag finish for all newly constructed concrete pavements. It is important that the texturing equipment not tear or unduly roughen the pavement surface during the operation. Any imperfections resulting from the texturing operation shall be corrected to the satisfaction of the Engineer.

a. Burlap Drag finish. A Burlap Drag finish shall be applied when the water sheen has practically disappeared. The equipment shall operate transversely across the pavement surface, providing corrugations that are uniform in appearance and depth.

501MR-29 Curing. Immediately after finishing operations are completed and marring of the concrete will not occur, the entire surface of the newly placed concrete shall be cured for a 7-day cure period in accordance with one of the methods below. Failure to provide sufficient cover material of whatever kind the Contractor may elect to use, or lack of water to adequately take care of both curing and other requirements, shall be cause for immediate suspension of concreting operations. The concrete shall not be left exposed for more than 1/2 hour during the curing period.

When a two-sawcut method is used to construct the contraction joint, immediately resume curing of the joint area upon completion and cleaning of the saw cut. The sealant reservoir shall not be sawed until after the curing period has been completed. When the one cut method is used to construct the contraction joint, the joint shall be cured with wet rope, wet rags, or wet blankets. The rags, ropes, or blankets shall be kept moist for the duration of the curing period.

a. Burlap-polyethylene sheets. The surface of the pavement shall be entirely covered with the sheeting. The sheeting used shall be such length (or width) that it will extend at least twice the thickness of the pavement beyond the edges of the slab. The sheeting shall be placed so that the entire surface and both edges of the slab are completely covered. The sheeting shall be placed and weighted to remain in contact with the surface covered, and the covering shall be maintained fully saturated and in position for seven (7) days after the concrete has been placed. Over saturation of the surface and shoulder area is prohibited. Standing water shall be minimized by applying only the amount of water necessary to saturate the burlap.

b. Water method. The entire area shall be covered with burlap or other water absorbing material. The material shall be of sufficient thickness to retain water for adequate curing without excessive runoff. The material shall be kept wet at all times and maintained for seven (7) days. When the forms are stripped, the vertical walls shall also be kept moist. Over saturation of the surface and shoulder area is prohibited. Standing water shall be minimized by applying only the amount of water necessary to saturate the burlap.

c. Concrete protection for cold weather. The concrete shall be maintained at an ambient temperature of at least 50°F for a period of 72 hours after placing and at a temperature above freezing for the remainder of the curing time. The Contractor shall be responsible for the quality and strength of the concrete placed during cold weather; and any concrete damaged shall be removed and replaced at the Contractor's expense.

e. Concrete protection for hot weather. Concrete should be continuous moisture cured for the entire curing period and shall commence as soon as the surfaces are finished and continue for at least 24 hours. Other curing methods may be approved by the Engineer.

501MR-30 Removing forms. Unless otherwise specified, forms shall not be removed from freshly placed concrete until it has hardened sufficiently to permit removal without chipping, spalling, or tearing. After the forms have been removed, the sides of the slab shall be cured as per the methods indicated in paragraph 501MR-29. Major honeycombed areas shall be considered as defective work and shall be removed and replaced in accordance with paragraph 501MR-37c.

501MR-31 Sealing joints. The joints in the pavement shall be sealed in accordance with Item P-604MR.

501MR-32 Protection of pavement. The Contractor shall protect the pavement and its appurtenances against all traffic. No traffic will be permitted on the surface until after the pavement is accepted by the Engineer and pavement marking commences. Any damage to the pavement occurring prior to final acceptance shall be repaired or the pavement replaced at the Contractor's expense.

Aggregates, rubble, or other similar construction materials shall not be placed on the pavements. Traffic shall be excluded from the new pavement by erecting and maintaining barricades and signs until the concrete is accepted, or for a longer period if directed by the Engineer.

New and existing pavements damaged by the contractor shall be removed and replaced at the Contractor's expense. Slabs shall be removed to the full depth, width, and length of the slab.

501MR-33 Opening to construction traffic. Only light traffic shall be permitted on the pavement after opening. The pavement shall not be opened to traffic until test specimens molded and cured in accordance with ASTM C31 have attained their design strength when tested in accordance with ASTM C78. If such tests are not conducted, the pavement shall not be opened to traffic until 28 days after the concrete was. Prior to opening the pavement to traffic, all joints shall be sealed.

501MR-34 Repair, removal, or replacement of slabs.

a. General. New pavement slabs that are broken or contain cracks or are otherwise defective or unacceptable shall be removed and replaced as specified hereinafter at no additional cost to the Owner. Slabs containing spalls joints shall be repaired or removed and replaced, as determined by the Engineer, at no additional cost to the Owner. Removal of partial slabs is not permitted. Removal and replacement shall be full depth, shall be full length and width of the slab, and the limit of removal shall be normal to the paving lane and to each original transverse joint. The Engineer will determine whether cracks extend full depth of the pavement and may require cores to be drilled on the crack to determine depth of cracking. Such cores shall be 4 inch diameter, shall be drilled by the Contractor and shall be filled by the Contractor with a well consolidated concrete mixture bonded to the walls of the hole with epoxy resin, using approved procedures. Drilling of cores and refilling holes shall be at no expense to the Owner. All epoxy resin used in this work shall conform to ASTM C881, Type V. Repair of cracks as described in this section shall not be allowed if in the opinion of the Engineer the overall condition of the pavement indicates that such repair is unlikely to achieve an acceptable and durable finished pavement. No repair of cracks shall be allowed in any panel that demonstrates segregated aggregate with an absence of coarse aggregate in the upper 1/8 inch of the pavement surface.

b. Shrinkage cracks. Shrinkage cracks, which do not exceed 4 inches in depth, shall be cleaned and then pressure injected with epoxy resin, Type IV, Grade 1, using procedures as approved by the Engineer. Care shall be taken to assure that the crack is not widened during epoxy resin injection. All epoxy resin injection shall take place in the presence of the Engineer. Shrinkage cracks, which exceed 4 inches in depth, shall be treated as full depth cracks in accordance with paragraphs 501MR-34b and 501MR-34c.

c. Slabs with cracks through interior areas. Interior area is defined as that area more than 6 inches from either adjacent original transverse joint. The full slab shall be removed and replaced at no cost to the Owner, when there are any full depth cracks, or cracks greater than 4 inches in depth, that extend into the interior area.

d. Cracks close to and parallel to joints. All cracks essentially parallel to original joints, extending full depth of the slab, and lying wholly within 6 inches either side of the joint shall be treated as specified here. Any crack extending more than 6 inches from the joint shall be treated as specified above in subparagraph c.

(1) Full depth cracks present, original joint not opened. When the original un-cracked joint has not opened, the crack shall be sawed and sealed, and the original joint filled with epoxy resin as specified below. The crack shall be sawed with equipment specially designed to follow random cracks. The reservoir for joint sealant in the crack shall be formed by sawing to a depth of 3/4 inches, ±1/16 inch, and to a width of 5/8 inch, ±1/8 inch. Any equipment or procedure which causes raveling or spalling along the crack shall be modified or replaced to prevent such raveling or spalling. The joint sealant shall be a liquid sealant as specified. Installation of joint seal shall be as specified for sealing joints or as directed. If the joint sealant reservoir has been sawed out, the reservoir and as much of the lower saw cut as possible shall be filled with epoxy resin, Type IV, Grade 2, thoroughly tooled into the void using approved procedures.

If only the original narrow saw cut has been made, it shall be cleaned and pressure injected with epoxy resin, Type IV, Grade 1, using approved procedures. If filler type material has been used to form a weakened plane in the transverse joint, it shall be completely sawed out and the saw cut pressure injected with epoxy resin, Type IV, Grade 1, using approved procedures. Where a parallel crack goes part way

across paving lane and then intersects and follows the original joint which is cracked only for the remained of the width, it shall be treated as specified above for a parallel crack, and the cracked original joint shall be prepared and sealed as originally designed.

(2) Full depth cracks present, original joint also cracked. At a joint, if there is any place in the lane width where a parallel crack and a cracked portion of the original joint overlap, the entire slab containing the crack shall be removed and replaced for the full lane width and length.

e. Removal and replacement of full slabs. Where it is necessary to remove full slabs, unless there are dowels present, all edges of the slab shall be cut full depth with a concrete saw. All saw cuts shall be perpendicular to the slab surface. If dowels, or tie bars are present along any edges, these edges shall be sawed full depth just beyond the end of the dowels or tie bars. These joints shall then be carefully sawed on the joint line to within one inch of the depth of the dowel or tie bar.

The main slab shall be further divided by sawing full depth, at appropriate locations, and each piece lifted out and removed. Suitable equipment shall be used to provide a truly vertical lift, and approved safe lifting devices used for attachment to the slabs. The narrow strips along doweled edges shall be carefully broken up and removed using light, hand-held jackhammers, 30 lb or less, or other approved similar equipment.

Care shall be taken to prevent damage to the dowels, tie bars, or to concrete to remain in place. The joint face below dowels shall be suitably trimmed so that there is not abrupt offset in any direction greater than 1/2 inch and no gradual offset greater than one inch when tested in a horizontal direction with a 12-foot straightedge.

No mechanical impact breakers, other than the above hand-held equipment shall be used for any removal of slabs. Care shall be taken to prevent undermining of adjacent pavements.

If underbreak over 4 inches deep occurs, the entire slab containing the underbreak shall be removed and replaced. Where there are no dowels or tie bars, or where they have been damaged, dowels or tie bars of the size and spacing as specified for other joints in similar pavement shall be installed by epoxy grouting them into holes drilled into the existing concrete using procedures as specified. Original damaged dowels or tie bars shall be cut off flush with the joint face. Protruding portions of dowels shall be painted and lightly oiled. All four (4) edges of the new slab shall contain dowels or original tie bars.

Placement of concrete shall be as specified for original construction. Prior to placement of new concrete, the underlying material (unless it is stabilized) shall be re-compacted and shaped as specified in the appropriate section of these specifications. The underlying material shall be cleaned of all loose material and contaminants and lined with rosin paper as a bond breaker. The resulting joints around the new slab shall be prepared and sealed as specified for original construction.

f. Repairing spalls along joints. Where directed, spalls along joints of new slabs, and along parallel cracks used as replacement joints, shall be repaired by first making a vertical saw cut at least 3 inches outside the spalled area and to a depth of at least 3 inches. Saw cuts shall be straight lines forming rectangular areas. The concrete between the saw cut and the joint, or crack, shall be chipped out to remove all unsound concrete and at least 1/2 inch of visually sound concrete. The cavity thus formed shall be thoroughly cleaned with high-pressure water jets supplemented with compressed air to remove all loose material. Immediately before filling the cavity, a prime coat of epoxy resin, Type III, Grade I, shall be applied to the dry cleaned surface of all sides and bottom of the cavity, except any joint face. The prime coat shall be applied in a thin coating and scrubbed into the surface with a stiff-bristle brush. Pooling of epoxy resin shall be avoided. The cavity shall be filled with low slump Portland cement concrete or mortar or with epoxy resin concrete or mortar. Concrete shall be used for larger spalls, generally those more than 1/2 cu. ft. in size, and mortar shall be used for the smaller ones. Any spall less than 0.1 cu. ft. shall be repaired only with epoxy resin mortar or a Grade III epoxy resin. Portland cement concrete and mortar

mixtures shall be proportioned as directed and shall be mixed, placed, consolidated, and cured as directed. Epoxy resin mortars shall be made with Type III, Grade 1, epoxy resin, using proportions and mixing and placing procedures as recommended by the manufacturer and approved by the Engineer. The epoxy resin materials shall be placed in the cavity in layers not over 2 inches thick. The time interval between placement of additional layers shall be such that the temperature of the epoxy resin material does not exceed 140°F at any time during hardening. Mechanical vibrators and hand tampers shall be used to consolidate the concrete or mortar. Any repair material on the surrounding surfaces of the existing concrete shall be removed before it hardens. Where the spalled area abuts a joint, an insert or other bond-breaking medium shall be used to prevent bond at the joint face. A reservoir for the joint sealant shall be sawed to the dimensions required for other joints, or as required to be routed for cracks. The reservoir shall be thoroughly cleaned and sealed with the sealer specified for the joints. If any spall penetrates half the depth of the slab or more, the entire slab shall be removed and replaced as previously specified If any spall would require over 25% of the length of any single joint to be repaired, the entire slab shall be removed and replaced. Repair of spalls as described in this section shall not be allowed if in the opinion of the Engineer the overall condition of the pavement indicates that such repair is unlikely to achieve an acceptable and durable finished pavement. No repair of spalls shall be allowed in any panel that demonstrates segregated aggregate with a significant absence of coarse aggregate in the upper one-eight (1/8th) inch of the pavement surface.

g. Minor Patching. An approved pre-packaged patching material prepared as per manufacturer's recommendation shall be used for filling minor voids, holes and cracks as directed by the Engineer.

h. Diamond grinding of PCC surfaces. Diamond grinding of the hardened concrete with an approved diamond grinding machine should not be performed until the concrete is 14 days or more old and concrete has reached full minimum strength. When required, diamond grinding shall be accomplished by sawing with saw blades impregnated with industrial diamond abrasive. The saw blades shall be assembled in a cutting head mounted on a machine designed specifically for diamond grinding that will produce the required texture and smoothness level without damage to the pavement. The saw blades shall be 1/8-inch (3-mm) wide and there shall be a minimum of 55 to 60 blades per 12 inches (300 mm) of cutting head width; the actual number of blades will be determined by the Contractor and depend on the hardness of the aggregate. Each machine shall be capable of cutting a path at least 3 feet (0.9 m) wide. Equipment that causes ravels, aggregate fractures, spalls or disturbance to the joints will not be permitted. The area corrected by diamond grinding the surface of the hardened concrete should not exceed 10% of the total area of any sublot. The depth of diamond grinding shall not exceed 1/2 inch (13 mm) and all areas in which diamond grinding has been performed will be subject to the final pavement thickness tolerances specified. Grinding will be tapered in all directions to provide smooth transitions to areas not requiring grinding. All pavement areas requiring plan grade or surface smoothness corrections in excess of the limits specified above, may require removing and replacing in conformance with paragraph 501MR-34.

MATERIAL ACCEPTANCE

501MR-35 Acceptance sampling and testing. All acceptance sampling and testing necessary to determine conformance with the requirements specified in this section will be performed by the Contractor, except as noted. Testing organizations performing these tests shall be accredited in accordance with ASTM C1077. The laboratory accreditation must be current and listed on the accrediting authority's website. All test methods required for acceptance sampling and testing must be listed on the lab accreditation. A copy of the laboratory's current accreditation and accredited test methods shall be submitted to the Engineer prior to start of construction. Acceptance testing shall be performed by the Contractor regardless of any other testing or sampling performed by the Engineer or Owner.

Concrete shall be accepted for strength, grade, and thickness on a lot basis. A lot shall consist of a day's production**.**

a. Flexural strength.

(1) Sampling. Each lot shall be divided into four equal sublots. One sample shall be taken for each sublot from the plastic concrete delivered to the job site. Sampling locations shall be determined by the Contractor in accordance with random sampling procedures contained in ASTM D3665. The concrete shall be sampled in accordance with ASTM C172.

(2) Testing. Two (2) specimens shall be made from each sample. Specimens shall be made in accordance with ASTM C31 and the flexural strength of each specimen shall be determined in accordance with ASTM C78. The flexural strength for each sublot shall be computed by averaging the results of the two test specimens representing that sublot.

Immediately prior to testing for flexural strength, the beam shall be weighed and measured for determination of a sample unit weight. Measurements shall be made for each dimension; height, depth, and length, at the mid-point of the specimen and reported to the nearest 1/10 inch. The weight of the specimen shall be reported to the nearest 0.1 pound. The sample unit weight shall be calculated by dividing the sample weight by the calculated volume of the sample. This information shall be reported as companion information to the measured flexural strength for each specimen.

The samples will be transported while in the molds. The curing, except for the initial cure period, will be accomplished using the immersion in saturated lime water method.

Slump, air content, and temperature tests will also be conducted by the quality control laboratory for each set of strength test samples, per ASTM C31.

(3) Curing. The Contractor shall provide adequate facilities for the initial curing of beams. During the 24 hours after molding, the temperature immediately adjacent to the specimens must be maintained in the range of 60° to 80°F, and loss of moisture from the specimens must be prevented. The specimens may be stored in tightly constructed wooden boxes, damp sand pits, temporary buildings at construction sites, under wet burlap in favorable weather, or in heavyweight closed plastic bags, or using other suitable methods, provided the temperature and moisture loss requirements are met.

(4) Acceptance. Acceptance of pavement for flexural strength will be approved by the Engineer in accordance with paragraph 501MR-35a.

b. Pavement thickness and grade.

(1) Sampling. The thickness and grade of each lot shall be calculated using surveyed elevations. The Engineer shall determine the elevation of the concrete surface at an equal grid spacing of not more than 5-foot by 5-foot, with the size and location selected to coincide with joint intersections.

(2) Testing. Thickness shall be calculated as the difference in the surveyed elevation of the concrete surface and the surface of the underlying course.

(3) Acceptance. Acceptance of pavement for thickness shall be approved by the Engineer in accordance with paragraph 501MR-36.

c. Partial lots. When operational conditions cause a lot to be terminated before the specified number of tests have been made for the lot, or when the Contractor and Engineer agree in writing to allow overages or minor placements to be considered as partial lots, the following procedure will be used to adjust the lot size and the number of tests for the lot.

Where three sublots have been produced, they shall constitute a lot. Where one or two sublots have been produced, they shall be incorporated into the next lot or the previous lot and the total number of sublots shall be used in the acceptance criteria calculation, that is, n=5 or n=6.

d. Outliers. All individual flexural strength tests within a lot shall be checked for an outlier (test criterion) in accordance with ASTM E178, at a significance level of 5%. Outliers shall be discarded, and

the percentage of material within specification limits (PWL) shall be determined using the remaining test values.

501MR-36 Acceptance criteria.

a. General. Acceptance will be based on the following characteristics of the completed pavement discussed in paragraph 501MR-36b:

(1) Thickness

(2) Grade

The Engineer may at any time, notwithstanding previous plant acceptance, reject and require the Contractor to dispose of any batch of concrete mixture which is rendered unfit for use due to contamination, segregation, or improper slump. Such rejection may be based on only visual inspection. In the event of such rejection, the Contractor may take a representative sample of the rejected material in the presence of the Engineer, and if it can be demonstrated in the laboratory, in the presence of the Engineer, that such material was erroneously rejected, payment will be made for the material at the contract unit price.

b. Acceptance criteria.

(1) Thickness. Thickness of finished concrete shall be within 0.5 inches of target thickness.

(2) Grade. The surface of the top layer shall show no deviations in excess of 3/8 inch (9 mm) in the vertical direction from the target elevation when surveyed in a 5’ x 5’ grid.

c. Removal and replacement of concrete. Any area or section of concrete that is removed and replaced shall be removed and replaced back to planned joints. The Contractor shall replace damaged dowels and the requirements for doweled longitudinal construction joints shall apply to all contraction joints exposed by concrete removal. Removal and replacement shall be in accordance with these specifications.

METHOD OF MEASUREMENT

501MR-37 The quantity of excavation to be paid for shall not be measured directly and shall be considered incidental to the work items.

BASIS OF PAYMENT

501MR-38 Payment for this item shall be considered incidental to the work items.

Payment will be made under:

No direct payment shall be made for this item.

TESTING REQUIREMENTS

ASTM C31	Standard Practice for Making and Curing Concrete Test Specimens in the Field
ASTM C39	Standard Test Method for Compressive Strength of Cylindrical Concrete Specimens
ASTM C70	Standard Test Method for Surface Moisture in Fine Aggregate
ASTM C78	Standard Test Method for Flexural Strength of Concrete (Using Simple Beam with Third-Point Loading)

ASTM C88	Standard Test Method for Soundness of Aggregates by Use of Sodium Sulfate or Magnesium Sulfate
ASTM C117	Standard Test Method for Materials Finer Than 75-µm (No. 200) Sieve in Mineral Aggregates by Washing
ASTM C131	Standard Test Method for Resistance to Degradation of Small-Size Coarse Aggregate by Abrasion and Impact in the Los Angeles Machine
ASTM C136	Standard Test Method for Sieve or Screen Analysis of Fine and Coarse Aggregates
ASTM C138	Standard Test Method for Density (Unit Weight), Yield, and Air Content (Gravimetric) of Concrete
ASTM C142	Standard Test Method for Clay Lumps and Friable Particles in Aggregates
ASTM C143	Standard Test Method for Slump of Hydraulic-Cement Concrete
ASTM C172	Standard Practice for Sampling Freshly Mixed Concrete
ASTM C173	Standard Test Method for Air Content of Freshly Mixed Concrete by the Volumetric Method
ASTM C174	Standard Test Method for Measuring Thickness of Concrete Elements Using Drilled Concrete Cores
ASTM C227	Standard Test Method for Potential Alkali Reactivity of Cement-Aggregate Combinations (Mortar-Bar Method)
ASTM C231	Standard Test Method for Air Content of Freshly Mixed Concrete by the Pressure Method
ASTM C289	Standard Test Method for Potential Alkali-Silica Reactivity of Aggregates (Chemical Method)
ASTM C295	Standard Guide for Petrographic Examination of Aggregates for Concrete
ASTM C114	Standard Test Methods for Chemical Analysis of Hydraulic Cement
ASTM C311	Standard Test Methods for Sampling and Testing Fly Ash or Natural Pozzolans for Use in Portland Cement Concrete
ASTM C566	Standard Test Method for Total Evaporable Moisture Content of Aggregates by Drying
ASTM C642	Standard Test Method for Density, Absorption, and Voids in Hardened Concrete
ASTM C666	Standard Test Method for Resistance of Concrete to Rapid Freezing and Thawing
ASTM C1077	Standard Practice for Agencies Testing Concrete and Concrete Aggregates for Use in Construction and Criteria for Testing Agency Evaluation
ASTM C1260	Standard Test Method for Potential Alkali Reactivity of Aggregates (Mortar-Bar Method)
ASTM C1567	Standard Test Method for Determining the Potential Alkali-Silica Reactivity of Combinations of Cementitious Materials and Aggregate (Accelerated Mortar-Bar Method)

ASTM C1602	Standard Specification for Mixing Water Used in the Production of Hydraulic Cement Concrete
ASTM D3665	Standard Practice for Random Sampling of Construction Materials
ASTM D4791	Standard Test Method for Flat Particles, Elongated Particles, or Flat and Elongated Particles in Coarse Aggregate
ASTM E178	Standard Practice for Dealing With Outlying Observations
ASTM E1274	Standard Test Method for Measuring Pavement Roughness Using a Profilograph

U.S. Army Corps of Engineers (USACE) Concrete Research Division (CRD) C662
Determining the Potential Alkali-Silica Reactivity of Combinations of Cementitious Materials, Lithium Nitrate Admixture and Aggregate (Accelerated Mortar-Bar Method)

MATERIAL REQUIREMENTS

ASTM A184	Standard Specification for Welded Deformed Steel Bar Mats for Concrete Reinforcement
ASTM A615	Standard Specification for Deformed and Plain Carbon-Steel Bars for Concrete Reinforcement
ASTM A704	Standard Specification for Welded Steel Plain Bar or Rod Mats for Concrete Reinforcement
ASTM A706	Standard Specification for Low-Alloy Steel Deformed and Plain Bars for Concrete Reinforcement
ASTM A714	Standard Specification for High-Strength Low-Alloy Welded and Seamless Steel Pipe
ASTM A775	Standard Specification for Epoxy-Coated Steel Reinforcing Bars
ASTM A934	Standard Specification for Epoxy-Coated Prefabricated Steel Reinforcing Bars
ASTM A996	Standard Specification for Rail-Steel and Axle-Steel Deformed Bars for Concrete Reinforcement
ASTM A1064	Standard Specification for Carbon-Steel Wire and Welded Wire Reinforcement, Plain and Deformed, for Concrete
ASTM A1078	Standard Specification for Epoxy-Coated Steel Dowels for Concrete Pavement
ASTM C33	Standard Specification for Concrete Aggregates
ASTM C94	Standard Specification for Ready-Mixed Concrete
ASTM C150	Standard Specification for Portland Cement
ASTM C171	Standard Specification for Sheet Materials for Curing Concrete
ASTM C260	Standard Specification for Air-Entraining Admixtures for Concrete
ASTM C309	Standard Specification for Liquid Membrane-Forming Compounds for Curing Concrete
ASTM C494	Standard Specification for Chemical Admixtures for Concrete

ASTM C595	Standard Specification for Blended Hydraulic Cements
ASTM C618	Standard Specification for Coal Fly Ash and Raw or Calcined Natural Pozzolan for Use in Concrete
ASTM C881	Standard Specification for Epoxy-Resin-Base Bonding Systems for Concrete
ASTM C989	Standard Specification for Slag Cement for Use in Concrete and Mortars
ASTM D1751	Standard Specification for Preformed Expansion Joint Filler for Concrete Paving and Structural Construction (Nonextruding and Resilient Bituminous Types)
ASTM D1752	Standard Specification for Preformed Sponge Rubber and Cork and Recycled PVC Expansion Joint Fillers for Concrete Paving And Structural Construction
ACI 211.1	Standard Practice for Selecting Proportions for Normal, Heavyweight, and Mass Concrete
ACI 305R	Guide to Hot Weather Concreting
ACI 306R	Guide to Cold Weather Concreting
ACI 309R	Guide for Consolidation of Concrete
AC 150/5320-6	Airport Pavement Design and Evaluation
PCA	Design and Control of Concrete Mixtures

END ITEM P-501MR

Item P-603MR Bituminous Tack Coat

DESCRIPTION

603MR-01 This item shall consist of preparing and treating a bituminous or concrete surface with bituminous material in accordance with these specifications and in reasonably close conformity to the lines shown on the plans.

MATERIALS

603MR-02 Bituminous materials. The bituminous material shall be an emulsified asphalt indicated in ASTM D3628 as a bituminous application for tack coat appropriate to local conditions or as designated by the Engineer.

CONSTRUCTION METHODS

603MR-03 Weather limitations. The tack coat shall be applied only when the existing surface is dry and the atmospheric temperature is 50°F (10°C) or above; the temperature has not been below 35°F (2°C) for the 12 hours prior to application; and when the weather is not foggy or rainy. The temperature requirements may be waived when directed by the Engineer.

603MR-04 Equipment. The Contractor shall provide equipment for heating and applying the bituminous material.

Provide a distributor with pneumatic tires of such size and number that the load produced on the base surface does not exceed 65.0 psi (4.5 kg/sq cm) of tire width to prevent rutting, shoving or otherwise damaging the base, surface or other layers in the pavement structure. Design and equip the distributor to spray the bituminous material in a uniform coverage at the specified temperature, at readily determined and controlled rates from 0.05 to 2.0 gallons per square yard (0.23 to 9.05 L/square meter), with a pressure range of 25 to 75 psi (172.4 to 517.1 kPa) and with an allowable variation from the specified rate of not more than ±5%, and at variable widths. Include with the distributor equipment a separate power unit for the bitumen pump, full-circulation spray bars, tachometer, pressure gauges, volume-measuring devices, adequate heaters for heating of materials to the proper application temperature, a thermometer for reading the temperature of tank contents, and a hand hose attachment suitable for applying bituminous material manually to areas inaccessible to the distributor. Equip the distributor to circulate and agitate the bituminous material during the heating process. If the distributor is not equipped with an operable quick shutoff valve, the tack operations shall be started and stopped on building paper. The Contractor shall remove blotting sand prior to asphalt concrete lay down operations at no additional expense to the Owner.

A power broom and/or power blower suitable for cleaning the surfaces to which the bituminous tack coat is to be applied shall be provided.

603MR-05 Application of bituminous material. Immediately before applying the tack coat, the full width of surface to be treated shall be swept with a power broom and/or power blower to remove all loose dirt and other objectionable material.

Emulsified asphalt shall be diluted by the addition of water when directed by the Engineer and shall be applied a sufficient time in advance of the paver to ensure that all water has evaporated before the overlying mixture is placed on the tacked surface.

The bituminous material including vehicle shall be uniformly applied with a bituminous distributor at the rate of 0.05 to 0.10 gallons per square yard (0.20 to 0.50 liters per square meter) depending on the condition of the existing surface. The type of bituminous material and application rate shall be approved by the Engineer prior to application.

After application of the tack coat, the surface shall be allowed to cure without being disturbed for the period of time necessary to permit drying and setting of the tack coat. This period shall be determined by the Engineer. The Contractor shall protect the tack coat and maintain the surface until the next course has been placed.

603MR-06 Bituminous material Contractor's responsibility. The Contractor shall provide a statement of source and character of the proposed bituminous material which must be submitted and approved by the Engineer before any shipment of bituminous materials to the project.

The Contractor shall furnish the vendor's certified test reports for each carload, or equivalent, of bituminous material shipped to the project. The tests reports shall be provided to and approved by the Engineer before the bituminous material is applied. If the bituminous material does not meet the specifications, it shall be replaced at the Contractor's expense. Furnishing the vendor's certified test report for the bituminous material shall not be interpreted as a basis for final acceptance.

603MR-07 Freight and weigh bills The Contractor shall submit waybills and delivery tickets, during progress of the work. Before the final statement is allowed, file with the Engineer certified waybills and certified delivery tickets for all bituminous materials used in the construction of the pavement covered by the contract. Do not remove bituminous material from storage until the initial outage and temperature measurements have been taken. The delivery or storage units will not be released until the final outage has been taken.

METHOD OF MEASUREMENT

603MR-08 The quantity of excavation to be paid for shall not be measured directly and shall be considered incidental to the work items.

BASIS OF PAYMENT

603MR-09 Payment for this item shall be considered incidental to the work items.

Payment will be made under:

No direct payment shall be made for this item.

MATERIAL REQUIREMENTS

ASTM D633	Standard Volume Correction Table for Road Tar
ASTM D977	Standard Specification for Emulsified Asphalt
ASTM D1250	Standard Guide for Use of the Petroleum Measurement Tables
ASTM D2028	Standard Specification for Cutback Asphalt (Rapid-Curing Type)

ASTM D2397	Standard Specification for Cationic Emulsified Asphalt
ASTM D3628	Standard Practice for Selection and Use of Emulsified Asphalts

END ITEM P-603MR

Item P-604MR Compression Joint Seals for Concrete Pavements

DESCRIPTION

604MR-01 This item shall consist of preformed polychloroprene compression seals used for sealing joints of rigid pavements.

MATERIALS

604MR-02 Compression seals. Compression joint seal materials shall be a vulcanized elastomeric compound using polychloroprene as the only base polymer. The material and the manufactured seal shall conform to ASTM D2628**.** The joint seal shall be a labyrinth type seal. The uncompressed depth of the face of the compression seal (that is to be bonded to the joint wall) shall be greater than the uncompressed width of the seal, except that for seals one inch (25 mm) or greater in width, the depth need be only one inch (25 mm) or greater. The actual width of the uncompressed seal for construction and contraction joints shall be as shown on the plans.

604MR-03 Lubricant/adhesive. Lubricant/adhesive used for the compression elastomeric joint seal shall be a one-component compound conforming to ASTM D2835.

604MR-04 Delivery and storage. Materials delivered to the job site shall be inspected for defects, unloaded, and stored with a minimum of handling to avoid damage. Storage facilities shall be provided at the job site to protect materials from weather and maintain materials at temperatures recommended by the manufacturer.

604MR-05 Submittals. Certified copies of test results shall be provided 15 days prior to use of material on the project.

a. Construction equipment list. List of proposed equipment to be used in the performance of construction work, including descriptive data shall be provided to the Engineer 15 days prior to use on the project.

b. Manufacturer's instructions. Where installation procedures are required in accordance with the manufacturer's recommendations, printed copies of these recommendations shall be submitted to the Engineer 60 days prior to use on the project. Installation of the material shall not be allowed until the recommendations are received.

c. Test reports. The Contractor shall submit certified copies of the test reports to the Engineer for written approval 15 days prior to use on the project. Printed directions from the manufacturer on recommended installation criteria shall be furnished with the test reports, plus the manufacturer's certification that the selected seal is recommend for the installation on this project. No material will be used until it has been approved by the Engineer.

604MR-06 Test requirements. Each lot of compression joint seal and lubricant/adhesive shall be sampled, identified, and tested for conformance with the applicable material specification. A lot of preformed seal shall consist of one day's production or 20,000 linear feet (6000 meters) for each cross-section, whichever is less. A lot of lubricant/adhesive shall consist of one day's production. No material shall be used at the project prior to receipt of written notice that the materials meet the laboratory requirements.

Testing of the preformed joint and lubricant/adhesive material shall be the responsibility of the Contractor and shall be performed in an approved independent laboratory and certified copies of the test reports shall be submitted for approval 15 days prior to the use of the materials at the job site. Samples of each lot of material shall also be submitted and will be retained by the Engineer for possible future testing should the materials appear defective during or after application. The Contractor shall furnish additional samples of materials, in sufficient quantity to be tested, upon request. Final acceptance will be based on **c**onformance to the specified test requirements and the performance of the in-place materials.

CONSTRUCTION METHODS

604MR-07 Equipment. Machines, tools, and equipment used in the performance of the work required by this section shall be approved by the Engineer before the work starts and shall be maintained by the Contractor in satisfactory condition at all times.

a. Joint cleaning equipment.

(**1) Concrete saw.** A self-propelled power saw with water-cooled diamond saw blades shall be provided for cutting joints to the depths and widths specified and for removing filler, existing old joint seal or other material embedded in the joints or adhered to the joint faces.

(**2) Sandblasting equipment.** Sandblasting is not allowed.

(**3) Waterblasting equipment.** Waterblasting is not allowed.

b. Sealing equipment. Equipment used to install the compression seal shall place the compression seal to the prescribed depths within the specified tolerances without cutting, nicking, twisting, or otherwise damaging the seal. The equipment shall not stretch or compress the seal more than 2.0% longitudinally during installation. The machine shall be an automatic self-propelled joint seal application equipment and shall be engine powered. The machine shall include a reservoir for the lubricant/adhesive, a device for conveying the lubricant/adhesive in the proper quantities to the sides the preformed seal or the sidewalls of the joint, a reel capable of holding one full spool of compression seal, and a power-driven apparatus for feeding the joint seal through a compression device and inserting the seal into the joint. The equipment shall also include a guide to maintain the proper course along the joint being sealed. The machine shall at all times be operated by an experienced operator.

CONSTRUCTION METHODS

604MR-08 Environmental conditions. The ambient temperature and the pavement temperature within the joint wall shall be at least 35°F (2°C) and rising at the time of installation of the materials. Sealant application will not be permitted if moisture or any foreign material is observed in the joint.

604MR-09 Preparation of joints. Immediately before installation of the compression joint seal, the joints shall be thoroughly cleaned to remove all laitance, filler, existing sealer, foreign material and protrusions of hardened concrete from the sides and upper edges of the joint space to be sealed. Cleaning shall be performed using equipment in accordance with paragraph 604MR-07a and shall extend along pavement surfaces at least ½ inch (12 mm) on either side of the joint. After final cleaning and immediately prior to sealing, the joints shall be blown out with compressed air and left completely free of debris and water. Demonstrate that the selected cleaning operation meets the cleanliness requirements. Any irregularity in the joint face that would prevent uniform contact between the joint seal and the joint face shall be corrected prior to the installation of the joint seal.

a. Sawing. Joints shall be sawed to clean and to open them to the full specified width and depth. Immediately following the sawing operation, the joint faces and opening shall be thoroughly cleaned using

a water jet to remove all saw cuttings or debris remaining on the faces or in the joint opening. Compression seal shall be installed within three (3) calendar days of the time the joint cavity is sawed. Depth of the joint cavity shall be in accordance with manufacturer's instructions. Submit printed copies of manufacturers' instructions 60 days prior to use on the project. The saw cut for the joint seal cavity shall at all locations be centered over the joint line. The nominal width of the sawed joint seal cavity shall be as shown on the plans; the actual width shall be within a tolerance of ±1/16 inch (2 mm):

b. Sandblast cleaning. Sandblast cleaning is not allowed.

c. Waterblast cleaning. Waterblast cleaning is not allowed.

d. Rate of progress. Sandblasting or waterblasting of the joint faces and air pressure cleaning of the joints shall be limited to the linear footage of joint that can be sealed during the same workday.

604MR-10 Installation of the compression seal.

a. Time of installation. Joints shall be sealed within three (3) calendar days of sawing the joint seal cavity and immediately following concrete cure and the final cleaning of the joint walls. Open joints ready for sealing that cannot be sealed under the conditions specified shall be provided with an approved temporary seal to prevent infiltration of foreign material. When rain interrupts the sealing operations, the joints shall be washed, air pressure cleaned and allowed to dry prior to installing the lubricant/adhesive and compression seal.

b. Sequence of installation. Longitudinal joints shall be sealed first, followed by transverse joints. Seals in longitudinal joints shall be installed so that all transverse joint seals will be intact from edge to edge of the pavement. Intersections shall be made monolithic by use of joint seal adhesive and care in fitting the intersection parts together. Extender pieces of seal shall not be used at intersections. Any seal falling short of the intersection shall be removed and replaced with new seal at no additional cost to the Owner.

604MR-11 Sealing of joints. The joint seal shall be installed using the equipment specified in paragraph 604MR-07b. The sides of the joint seal or the sides of the joint shall be covered with a coating of lubricant/adhesive and the seal installed as specified. Butt joints and seal intersections shall be coated with liberal applications of lubricant/adhesive. Lubricant/adhesive spilled on the pavement shall be removed immediately to prevent setting on the pavement. An in-place joint seal shall be in an upright position and free from twisting, distortion, and cuts. Adjustments shall be made to the installation equipment and procedure, if the stretch exceeds 1%. Any seal exceeding 2% stretch shall be removed and replaced. The joint seal shall be placed at a uniform depth within the tolerances specified. In-place joint seal that fails to meet the specified requirements shall be removed and replaced with new joint seal in a satisfactory manner at no additional cost to the Owner. The compression joint seal shall be placed to a depth of 3/16 inch (5 mm), ±1/8 inch (3 mm), below the pavement surface or below the depth of the groove unless otherwise directed by the Engineer. No part of the seal shall be allowed to project above the surface of the pavement. The seal shall be installed in the longest practicable lengths in longitudinal joints and shall be cut at the joint intersections so as to provide continuous installation of the seal in the transverse joints. The lubricant/adhesive in the longitudinal shall be allowed to set for one (1) hour prior to cutting at the joint intersections to reduce the possibility of shrinkage. For all transverse joints, the minimum length of the preformed joint seal shall be the pavement width from edge to edge.

604MR-12 Clean-up. Upon completion of the project, all unused materials shall be removed from the site, all lubricant/adhesive on the pavement surface shall be removed, and the pavement shall be left in clean condition.

604MR-13 Quality control provisions.

a. Equipment. The application equipment shall be inspected to assure uniform application of lubricant/adhesive to the sides of the compression joint seal or the walls of the joint. If any equipment

causes cutting, twisting, nicking, excessive stretching or compressing of the compression seal, or improper application of the lubricant/adhesive, the operation shall be suspended until causes of the deficiencies are determined and corrected by the Contractor.

b. Procedures.

(1) Quality control provisions shall be provided during the joint cleaning process to prevent or correct improper equipment and cleaning techniques that damage the concrete in any manner. Cleaned joints shall be approved by the Engineer prior to installation of the lubricant/adhesive and compression joint seal.

(**2)** Conformance to stretching and compression limitations shall be determined by the Engineer. Mark the top surface of the compression seal at one foot (30 cm) intervals in a manner clear and durable to enable length determinations of the seal. After installation, the distance between the marks on the seal shall be measured by the Contractor. If the stretching or compression exceeds the specified limit, the seal shall be removed and replaced with new joint seal at no additional cost to the Owner. The seal shall be removed up to the last correct measurement. The seal shall be inspected by the Contractor a minimum of twice per test section (total of 4 testing locations) for compliance to the shrinkage or compression requirements. Measurements shall also be made at the same interval to determine conformance with depth and width installation requirements. All compression seal that is not in conformance with specification requirements shall be removed and replaced with new joint seal at no additional cost to the Owner.

c. Inspection. The joint sealing system (compression seal and lubricant/adhesive) shall be inspected by the Engineer for proper rate of cure and bonding to the concrete, cuts, twists, nicks, and other deficiencies. Seals exhibiting any defects, at any time prior to final acceptance of the project, shall be removed from the joint, wasted, and replaced in a satisfactory manner, as determined by the Engineer.

METHOD OF MEASUREMENT

604MR-14 The quantity of excavation to be paid for shall not be measured directly and shall be considered incidental to the work items.

BASIS OF PAYMENT

604MR-15 Payment for this item shall be considered incidental to the work items.

Payment will be made under:

No direct payment shall be made for this item.

TESTING REQUIREMENTS

The publications listed below form a part of this specification to the extent referenced. The publications are referred to in this text by basic designation only.

ASTM D2628	Standard Specification for Preformed Polychloroprene Elastomeric Joint Seals for Concrete Pavements
ASTM D2835	Standard Specification for Lubricant for Installation of Preformed Compression Seals in Concrete Pavements
Corps of Engineers CRD C548	Standard Specification for Jet-Fuel and Heat Resistant Preformed Polychloroprene Elastomeric Joint Seals for Rigid Pavements

END ITEM P-604MR

APPENDIX E

Daily Notes

OMB CONTROL NUMBER: 2120-0569
EXPIRATION DATE: 8/31/2019

U.S. Department of Transportation
Federal Aviation Administration

Construction Progress and Inspection Report

Airport Grant Program

Period Ending
06/18/2018

Project Number
Delivery Order 15

Airport Name
National Airport Pavement and Materials Research Center (NAPMRC)

Project Description
Reflective Cracking - Outdoor Phase I

Contractor's Name
JBT Building Co. (2 workers)

1. Contract Time | No. Days Charged to Date 1 | Last Working Day Charged (Date)

2. Brief Weather Summary this Period, including Approximate Rainfall and Periods of Below Freezing Temperature *(On earthwork jobs, include soil conditions.)*

Low: 82 F Humidity (Low): 59%
High: 86 F Humidity (High): 77% Conditions: Clear

3. Rough Estimate of Percent Completion to Date of Construction Phases *(Include items such as clearing, grading, drainage, base, surface, lighting, etc.)*

1) Installation of silt fence and hay bales: 100%
2) Saw cuts at each end: 100%
3) Excavating/clearing existing material: 50% (only asphalt removed)

4. Work Completed or In Progress this Period

- Installation of silt fence (200 LF) and hay bales (Qty 4)
- Saw cut of asphalt at project extents
- Removal of 5-inch thick asphalt layer (6 truckloads removed ~ 2,325 SF)
- Covered excavated area at the end of shift

Equipment On-site Hitachi ZAXIS 160CC (Excavator), JCB 718 (Dump Truck), Multi-Quip SP1 (Slab Saw), Kubota L4330HST (Tractor)

5a. Summary of Laboratory and Field Testing this Period *(Note failing tests and any retests. Summarize out-of-tolerance.)*

No testing performed

5b. Material *(Identify material subject to pay reduction.)*

Demolition - Removal of HMA

6. Description of Anticipated Work by Contractor for Next Period

- Excavation down to existing subgrade
- Roll subgrade to specified compaction
- Stockpiling of excavated DGA material for future use in shoulder areas

7. Problem Areas/Other Comments *(Include revisions to plans and specifications approved or denied, delays, difficulties, etc. and actions taken.)*

- Develop solution for P-401 formwork and sequence of paving

SPONSOR'S INSPECTOR OR REPRESENTATIVE

Date	Typed or Printed Name and Title	Signature
06/18/2018	Joe Gawrysiak	

MATTHEW BRYDICK

FAA Form 5370-1 (9/17) SUPERCEDES PREVIOUS EDITION

U.S. Department of Transportation
Federal Aviation Administration

Construction Progress and Inspection Report

NAPMRC

Inspection Date
06/26/2018

Project Name
Reflective Cracking Outdoor Phase I

Contractor & # of Personnel	*Contractor & # of Personnel*	*Contractor & # of Personnel*	*Contractor & # of Personnel*

Equipment On-Site

- John Deere 310 SG (Tractor)
- CAT D3CXL Hystat (Bulldozer)
- Lee G440 (Power Grader)

Start Time – No Work *Stop Time* – No Work	*Temperature* Min – 69.0 F Max – 79.0 F	*Humidity* Min – 45 % Max – 84 %	*Conditions* Clear, fair

Site Activities
No activity for the day

Materials Delivered
None

Materials Removed
None

Laboratory and Field Testing Performed
None

Meetings/Discussions
None

Safety Concerns
None

Problem Areas/Additional Comments
3D Scan results revealed that a majority of the excavation was not deep enough to produce a consistent 8" layer of P-154 according to the proposed grades. JBT will excavate and compact the test section to match a 1% slope in the north direction along with a 1% cross slope. These grades will be calculated and measured from the SE corner of the excavation.

INSPECTOR OR REPRESENTATIVE

Date	*Typed or Printed Name and Title*	*Signature*
6/26/18	JOE GAWRYSIAK	

U.S. Department of Transportation **Federal Aviation Administration**	**Construction Progress and Inspection Report** **NAPMRC**		*Inspection Date* 06/27/2018 *Project Name* Reflective Cracking Outdoor Phase I
Contractor & # of Personnel GDIT - 6	*Contractor & # of Personnel* Gemini. - 1	*Contractor & # of Personnel* JBT Building Co. - 3	*Contractor & # of Personnel*

Equipment On-Site

- Lee G440 (Power Grader)
- JCB 718 (Dump Truck)
- RL-SV2S (Laser Level)
- John Deere 310SG (Backhoe)
- Dynapac CA25D (Roller)
- Hamm HD12 (Roller)
- ZAXIS 160LC (Excavator)

Start Time – 8:30 AM *Stop Time –* 4:00 PM	*Temperature* Min – 69.0 F Max – 76.0 F	*Humidity* Min – 62 % Max – 75 %	*Conditions* Cloudy

Site Activities

JBT Building Co. arrived on site at 8 AM for grading of subgrade surface according to the proposed elevations. JBT Building Co. personnel used the Lee G440 Power Grader for majority of the grading and the Dynapac CA25D Roller for 2 passes. A dirt ramp was used for getting into and out of excavated area. It was removed and metal plates lifted were lifted into place to allow for the smaller Hamm HD12 Roller to compact the portion from 0+00 to 0+10. The roller completed a total of 10 passes (back and forth equal to 1 pass). Final grades were confirmed by GDIT using a level and rod. GDIT personnel also covered the site at end of the work period.

Materials Delivered

None

Materials Removed

Subgrade material removed from site

Laboratory and Field Testing Performed

None

Meetings/Discussions

None

Safety Concerns

None

Problem Areas/Additional Comments

None

INSPECTOR OR REPRESENTATIVE

Date	*Typed or Printed Name and Title*	*Signature*
6/27/18	JOE GAWRYSIAK	

U.S. Department of Transportation **Federal Aviation Administration**	**Construction Progress and Inspection Report** **NAPMRC**		*Inspection Date* 06/28/2018 *Project Name* Reflective Cracking Outdoor Phase I
Contractor & # of Personnel GDIT - 7	*Contractor & # of Personnel* Gemini. - 2	*Contractor & # of Personnel* Craig Testing - 1	*Contractor & # of Personnel*

Equipment On-Site

- Dynapac CA25D (Roller)
- ZAXIS 160LC (Excavator)
- Instrotek Nuclear Moisture-Density Gauge 3440

Start Time – 8:00 AM *Stop Time –* 4:00 PM	*Temperature* Min – 79.0 F Max – 92.0 F	*Humidity* Min – 47 % Max – 88 %	*Conditions* Cloudy, Partly Cloudy

Site Activities

GDIT personnel placed (2) sump pumps in the water collected on top of the tarps prior to removing the tarps. Craig Testing came in at 9 AM to perform Nuclear testing, results passed for all but (3) readings. Craig Personnel left at 10:45 AM. GDIT and JBT used the Dynapac CA25D Roller onsite to compact 0+02.5 to 0+22.5 section, which was not meeting requirement. The ZAXIS 160LC Excavator was used to lower temporary ramps into place for the roller to get down to site level. The Dynapac CA25D Roller did (16) passes on the total site and (25) additional passes on section not reaching required compaction. The Excavator then removed the temporary ramps from site. Craig Testing personnel arrived again at 2:45 PM and took a third round of Nuclear Moisture and Density tests until 4:00 PM.

Materials Delivered

None

Materials Removed

None

Laboratory and Field Testing Performed

Nuclear Moisture and Density tests (see attached)

Meetings/Discussions

None

Safety Concerns

None

Problem Areas/Additional Comments

None

INSPECTOR OR REPRESENTATIVE

Date	*Typed or Printed Name and Title*	*Signature*
6/28/18	JOE GAWRYSIAK	

CRAIG TESTING LABORATORIES, INC.
5439 Harding Highway • P.O. Box 427 • Mays Landing, NJ 08330-0427 • (609) 625-1700 • FAX (609) 625-1798

CLIENT: General Dynamics Information Technology

PROJECT NO.: 811092-2

PROJECT: Reflective Cracking Outdoor Phase I, Building 296 Outdoors, William J. Hughes Technical Center

REPORT NO.: FD-3

INSPECTED BY: Harvey Rheiner

DATE INSPECTED: June 28, 2018

GEOTECHNICAL REPORT BY: N/A

DATED: N/A

EARTHWORK FIELD INSPECTION REPORT

Item Inspected: ☐ Building Pad ☐ Slab ☐ Foundation ☑ Other: Test Area
☐ Utility Trench ☐ Sub-Grade ☐ Pavement Sub-Base Compactor Model: Dynapac CA 25D

	Location	Dry Density (pcf)	Percent Moisture	Proctor (pcf) ASTM D1557	Optimum Moisture (%)	Compaction Required (%)	Percent Compaction
1	Between stations 0+02.5 - 0+12.5	112.3	11.8	125.7	8.9	95.0	89.3%
2	Between stations 0+12.5 - 0+22.5	118.6	10.9	125.7	8.9	95.0	94.4%
3	Between stations 0+22.5 - 0+32.5	118.6	13.1	125.7	8.9	95.0	94.4%
4	Between stations 0+32.5 - 0+42.5	120.7	13.0	125.7	8.9	95.0	96.0%
5	Between stations 0+42.5 - 0+52.5	119.9	15.5	125.7	8.9	95.0	95.4%
6	Between stations 0+52.5 - 0+62.5	117.1	9.0	125.7	8.9	95.0	93.2%
7	Between stations 0+62.5 - 0+72.5	121.7	11.5	125.7	8.9	95.0	96.8%
8	Between stations 0+72.5 - 0+82.5	119.5	12.0	125.7	8.9	95.0	95.1%
9	Between stations 0+82.5 - 0+92.5	119.0	8.7	125.7	8.9	95.0	94.7%
10	Between stations 0+92.5 - 1+02.5	122.7	9.6	125.7	8.9	95.0	97.6%

Loose Lift Thickness (in.): N/A

Fill Placement: ☐ Controlled ☐ Uncontrolled

Continued on following page . . .

CRAIG TESTING LABORATORIES, INC.
5439 Harding Highway • P.O. Box 427 • Mays Landing, NJ 08330-0427 • (609) 625-1700 • FAX (609) 625-1798

CLIENT: General Dynamics Information Technology

PROJECT NO.: 811092-2

PROJECT: Reflective Cracking Outdoor Phase I, Building 296 Outdoors, William J. Hughes Technical Center

REPORT NO.: FD-3

INSPECTED BY: Harvey Rheiner

DATE INSPECTED: June 28, 2018

GEOTECHNICAL REPORT BY: N/A

DATED: N/A

EARTHWORK FIELD INSPECTION REPORT

Item Inspected: ☐ Building Pad ☐ Slab ☐ Foundation ☐ Other: Test Area
☐ Utility Trench ☐ Sub-Grade ☐ Pavement Sub-Base Compactor Model: Dynapac CA 25D

	Location	Dry Density (pcf)	Percent Moisture	Proctor (pcf) ASTM D155	Optimum Moisture (%)	Compaction Required (%)	Percent Compaction
11	Between stations 1+02.5 - 1+12.5	120.7	12.4	125.7	8.9	95.0	96.0%
12	Between stations 1+12.5 - 1+22.5	120.8	11.2	125.7	8.9	95.0	96.1%
13	Between stations 1+22.5 - 1+32.5	119.4	11.4	125.7	8.9	95.0	95.0%
14	Between stations 1+32.5 - 1+42.5	123.7	8.1	125.7	8.9	95.0	98.4%
15	Between stations 1+42.5 - 1+52.5	125.6	7.8	125.7	8.9	95.0	99.9%
16	Between stations 1+52.5 - 1+62.5	121.5	13.1	125.7	8.9	95.0	96.7%
17	Between stations 1+62.5 - 1+72.5	128.7	6.1	125.7	8.9	95.0	102.4%
18	Between stations 1+72.5 - 1+82.5	124.2	9.4	125.7	8.9	95.0	98.8%
19	Between stations 0+22.5 - 0+32.5	114.9	13.1	125.7	8.9	95.0	91.4%
20	Between stations 0+02.5 - 0+12.5	114.0	11.4	125.7	8.9	95.0	90.7%

Gauge Serial No.: 33785 Gauge Standard Counts: MS: 632 DS: 1897

Fill Placement: ☐ Controlled ☐ Uncontrolled **Loose Lift Thickness (in.):** N/A

Hours on Site: 8:00 am - 11:00 am

Inspection Findings

Report for Informational Purposes Only

Remarks:

Reported to:
Project Distribution

Reviewed By: Ian Craig

REV 4/17

Staion Range in Relation to Slab Joints	Offset	Station	Percent of Maximum Dry Density (%)	Moisture (%)	
0+02.5 to 0+12.5	~~0~~ -1	3.7	89.3	11.8	X
0+12.5 to 0+22.5	~~3~~ -6	~~14~~ 11.8	94.3	10.9	X
0+22.5 to 0+32.5	~~1~~ 0	~~22~~ 17.3	94.4	13.1	X
0+32.5 to 0+42.5	~~-1~~ -0.3	~~34~~ 25.1	96.1	13.0	
0+42.5 to 0+52.5	~~-4~~ 2.5	~~43~~ 35	95.4	15.5	
0+52.5 to 0+62.5	~~-1~~ 0.5	~~59~~ 46	93.2	9.0	~~96.8~~ ~~11.5~~ X
0+62.5 to 0+72.5	~~1~~ -1.5	~~69~~ 48	96.8	11.5	
0+72.5 to 0+82.5	~~-5~~ 4.5	~~77~~ 57.5	95.1	12.0	
0+82.5 to 0+92.5	~~0~~ 3.5	~~84~~ 69.0	94.7	8.7	
0+92.5 to 1+02.5	~~-5~~ 1	~~94~~ 80.0	97.6	9.6	
1+02.5 to 1+12.5	~~3~~ 2	~~109~~ 87.0	96.0	12.4	
1+12.5 to 1+22.5	~~1~~ 1	~~115~~ 96.0	96.1	11.2	
1+22.5 to 1+32.5	~~2~~ 1.5	~~126~~ 107	95.0	11.4	
1+32.5 to 1+42.5	~~2~~ -2.5	~~138~~ 114.5	98.4	8.1	
1+42.5 to 1+52.5	~~2~~ 2.5	~~143~~ 126	99.9	7.8	
	1.5	136	96.6	13.1	
	0.5	145.5	102.4	6.1	
	-1.5	153.5	98.8	9.4	
	5	17.3	91.4	13.1	X
	1.5	5	90.7	11.4	X
	2.5	7	94.9	11.5	

CRAIG TESTING LABORATORIES, INC.
5439 Harding Highway • P.O. Box 427 • Mays Landing, NJ 08330-0427 • (609) 625-1700 • FAX (609) 625-1798

CLIENT: General Dynamics Information Technology

PROJECT NO.: 811092-2

PROJECT: Reflective Cracking Outdoor Phase I, Building 296 Outdoors, William J. Hughes Technical Center

REPORT NO.: FD-4

INSPECTED BY: Harvey Rheiner

DATE INSPECTED: June 28, 2018

GEOTECHNICAL REPORT BY: N/A

DATED: N/A

EARTHWORK FIELD INSPECTION REPORT

Item Inspected: ☐ Building Pad ☐ Slab ☐ Foundation ☑ Other: Test Area
☐ Utility Trench ☐ Sub-Grade ☐ Pavement Sub-Base Compactor Model: Dynapac CA 25D

	Location	Dry Density (pcf)	Percent Moisture	Proctor (pcf) ASTM D1557	Optimum Moisture (%)	Compaction Required (%)	Percent Compaction
1	Between stations 0+02.5 - 0+12.5	119.3	11.5	125.7	8.9	95.0	94.9%
2							
3							
4							
5							
6							
7							
8							
9							
10							

Gauge Serial No.: 33785 Gauge Standard Counts: MS: 632 DS: 1897

Fill Placement: ☐ Controlled ☐ Uncontrolled **Loose Lift Thickness (in.):** N/A

Hours on Site: 8:00 am - 11:00 am

Inspection Findings

Report for Informational Purposes Only

Remarks:

Reported to:
Project Distribution

Reviewed By: Ian Craig

REV 4/17

CRAIG
TESTING LABORATORIES, INC.
5439 Harding Highway • P.O. Box 427 • Mays Landing, NJ 08330-0427 • (609) 625-1700 • FAX (609) 625-1798

CLIENT: General Dynamics Information Technology

PROJECT NO.: 811092-2

PROJECT: Reflective Cracking Outdoor Phase I, Building 296 Outdoors, William J. Hughes Technical Center

REPORT NO.: FD-5

INSPECTED BY: Kirk Herman

DATE INSPECTED: June 28, 2018

GEOTECHNICAL REPORT BY: N/A

DATED: N/A

EARTHWORK FIELD INSPECTION REPORT

Item Inspected: ☐ Building Pad ☐ Slab ☐ Foundation ☑ Other: Test Area
☐ Utility Trench ☐ Sub-Grade ☐ Pavement Sub-Base Compactor Model:

	Location	Dry Density (pcf)	Percent Moisture	Proctor (pcf) ASTM D155	Optimum Moisture (%)	Compaction Required (%)	Percent Compaction
1	Station 11 - Offset 0.00	120.2	11.7	125.7	8.9	95.0	95.6%
2	Station 18.5 - Offset -4.00	116.9	12.7	125.7	8.9	95.0	93.0%
3	Station 32 - Offset 1.00	117.7	11.4	125.7	8.9	95.0	93.6%
4	Station 36.5 - Offset -2.00	121.6	13.0	125.7	8.9	95.0	96.7%
5	Station 51.5 - Offset 2.00	114.7	5.2	125.7	8.9	95.0	91.2%
6	Station 53.5 - Offset 0.00	112.6	6.3	125.7	8.9	95.0	89.6%
7	Station 67.5 - Offset -2.00	119.8	11.8	125.7	8.9	95.0	95.3%
8	Station 73.5 - Offset 2.00	121.7	11.5	125.7	8.9	95.0	96.8%
9	Station 86.5 - offset -1.00	121.6	13.1	125.7	8.9	95.0	96.7%
10	Station 98.5 - Offset 0.00	121.5	10.8	125.7	8.9	95.0	96.7%

Loose Lift Thickness (in.): N/A

Fill Placement: ☐ Controlled ☐ Uncontrolled

Continued on following page . . .

CRAIG TESTING LABORATORIES, INC.
5439 Harding Highway • P.O. Box 427 • Mays Landing, NJ 08330-0427 • (609) 625-1700 • FAX (609) 625-1798

CLIENT: General Dynamics Information Technology

PROJECT NO.: 811092-2

PROJECT: Reflective Cracking Outdoor Phase I, Building 296 Outdoors, William J. Hughes Technical Center

REPORT NO.: FD-5

INSPECTED BY: Kirk Herman

DATE INSPECTED: June 28, 2018

GEOTECHNICAL REPORT BY: N/A

DATED: N/A

EARTHWORK FIELD INSPECTION REPORT

Item Inspected: ☐ Building Pad ☐ Slab ☐ Foundation ☑ Other: Test Area
☐ Utility Trench ☐ Sub-Grade ☐ Pavement Sub-Base Compactor Model:

	Location	Dry Density (pcf)	Percent Moisture	Proctor (pcf) ASTM D15	Optimum Moisture (%)	Compaction Required (%)	Percent Compaction
11	Station 111 - Offset -2.00	121.3	9.6	125.7	8.9	95.0	96.5%
12	Station 113.5 - Offset 3.00	122.1	9.7	125.7	8.9	95.0	97.1%
13	Station 130 - Offset -3.00	121.9	8.1	125.7	8.9	95.0	97.0%
14	Station 139.5 - Offset 2.00	124.0	7.3	125.7	8.9	95.0	98.6%
15	Station 144 - Offset -3.00	120.8	6.5	125.7	8.9	95.0	96.1%
16							
17							
18							
19							
20							

Gauge Serial No.: 25540 Gauge Standard Counts: MS: 633 DS: 1693

Fill Placement: ☐ Controlled ☐ Uncontrolled **Loose Lift Thickness (in.):** N/A

Hours on Site: 2:00 PM - 4:15 PM

Inspection Findings

Report for Informational Purposes Only

Remarks:

Reported to:
Project Distribution

Reviewed By: Ian Craig

REV 4/17

Field Notes of Craig Testing Nuclear Density Gage Results ASTM D6938				
TO 015 Reflective Cracking Outdoor Phase 1 P-152MR Subgrade				
Performed by Craig Testing Laboratories				
Final Testing results to be provided 6/28/2018				
Notes compiled by Tirupan Mandal 6/28/2018				
Station Range in Relation to Slab Joints	Offset	Station	Percent of Maximum Dry Density %	Moisture %
0+02.5 to 0+12.5	-1.00	3.7	89.3	11.8
0+12.5 to 0+22.5	0.00	17.3	94.4	13.1
0+22.5 to 0+32.5	-0.30	25.1	96.1	13.0
0+32.5 to 0+42.5	2.50	35.0	95.4	15.5
0+42.5 to 0+52.5	-1.50	48.0	96.8	11.5
0+52.5 to 0+62.5	4.50	57.5	95.1	12.0
0+62.5 to 0+72.5	3.50	69.0	94.7	8.7
0+72.5 to 0+82.5	1.00	80.0	97.6	9.6
0+82.5 to 0+92.5	2.00	87.0	96.0	12.4
0+92.5 to 1+02.5	1.00	96.0	96.1	11.2
1+02.5 to 1+12.5	1.50	107.0	95.0	11.4
1+12.5 to 1+22.5	-2.50	114.5	98.4	8.1
1+22.5 to 1+32.5	2.50	126.0	99.9	7.8
1+32.5 to 1+42.5	1.50	136.0	96.6	13.1
1+42.5 to 1+52.5	0.50	145.5	102.4	6.1
		Average:	96.3	11.0

Field Notes of Craig Testing Nuclear Density Gage Results ASTM D6938				
TO 015 Reflective Cracking Outdoor Phase 1 P-152MR Subgrade				
Performed by Craig Testing Laboratories				
Final Testing results to be provided 6/29/2018				
Notes compiled by Tirupan Mandal 6/28/2018				
Station Range in Relation to Slab Joints	Offset	Station	Percent of Maximum Dry Density %	Moisture %
0+02.5 to 0+12.5	0.00	11	95.6	11.7
0+12.5 to 0+22.5	-4.00	18.5	93.0	12.7
0+22.5 to 0+32.5	1.00	32	93.6	11.4
0+32.5 to 0+42.5	-2.00	36.5	96.7	13.0
0+42.5 to 0+52.5	2.00	51.5	91.2	5.2
0+52.5 to 0+62.5	0.00	53.5	89.6	6.3
0+62.5 to 0+72.5	-2.00	67.5	95.3	11.8
0+72.5 to 0+82.5	2.00	73.5	96.8	11.5
0+82.5 to 0+92.5	-1.00	86.5	96.7	13.1
0+92.5 to 1+02.5	0.00	98.5	96.7	10.8
1+02.5 to 1+12.5	-2.00	111	96.5	9.6
1+12.5 to 1+22.5	3.00	113.5	97.1	9.7
1+22.5 to 1+32.5	-3.00	130	97.0	8.1
1+32.5 to 1+42.5	2.00	139.5	98.0	7.3
1+42.5 to 1+52.5	-3.00	144	96.1	6.5
		Average:	95.3	9.9

U.S. Department of Transportation **Federal Aviation Administration**	**Construction Progress and Inspection Report** **NAPMRC**		*Inspection Date* 07/02/2018 *Project Name* Reflective Cracking Outdoor Phase I
Contractor & # of Personnel GDIT - 10	*Contractor & # of Personnel* Gemini - 3	*Contractor & # of Personnel* JBT Building Co.- 3	*Contractor & # of Personnel* Craig Testing - 1

Equipment On-Site

- Lee G440 (Power Grader)
- RL-SV2S (Laser Level)
- John Deere 310SG (Backhoe)
- Dynapac CA25D (Roller)
- HPRV (Firetruck)
- Instrotek Nuclear Moisture-Density Gauge

Start Time – 8:00 AM *Stop Time –* 4:30 PM	*Temperature* Min – 85 F Max – 95 F	*Humidity* Min – 49 % Max – 74 %	*Conditions* Fair

Site Activities

(6) Trucks arrived onsite at 7:50 AM to begin unloading a total of 141.35 tons of fine gray/black P-154 material. JBT Building Co. personnel distributed and smoothed out the material into the project area using the John Deere 310SG backhoe. (6) Samples of P-154 were taken in 5-gallon pails at randomly generated locations for testing in the lab to determine a proctor number and gradation of the material. The HPRV was operated by GDIT personnel and brought onsite at 9:15 AM to wet P-154 layer. Approximately 1,000 gallons of water sprayed on surface in short burst to allow for absorption into the P-154 material. The Lee G440 Power Grader was synchronized with the RL-SV2S Laser Level to grade the P-154. After intial grading was completed, the Dynapac CA25D Roller completed (5) passes (up and back equal to 1 pass). Craig Testing arrived onsite at 1 PM to perform Nuclear Moisture and Density Tests. First readings did not reach specifications with the moisture % and compaction % being too low. The HPRV was called back to wet the section between Station 60+00 and 120+00 which showed low moisture % during initial testing. The HPRV sprayed an additional 75 gallons of water on this section and was followed by (5) more passes of the Dynapac CA25D Roller. Testing results completed after the compaction were still not to specifications. The Dynpac CA25D completed (6) more passes and GDIT personnel covered site at end of day.

Materials Delivered

P-154

Materials Removed

P-154

Laboratory and Field Testing Performed

Nuclear Density and Moisture Testing

Meetings/Discussions

None

Safety Concerns

None

Problem Areas/Additional Comments

INSPECTOR OR REPRESENTATIVE

Date	Typed or Printed Name and Title	Signature
7/2/18	JOE GAWRYSIAK	

Hanson **Plant: 32112**

Penns Park
852 Swamp Road
Newtown, PA 18940
215-598-3152,

7/2/2018 05:37 In : 5:14:59
Customer: 2193715 NATIONAL PAVING CO INC
Order : FOB - FAA
P.O. :

Tkt. No. **1000206178**

Product 114317
Screenings
S.O. Info:
Ship Ref:

	Pounds	Kilo
Gross	72,100	32,704
Tare	26,420	11,984
Net	45,680	20,720
	22.84 Ton	20.72

	UNIT	TOTALS
Material:		
Freight:		
Tax:		
Fee / Fuel:		
Other Chrg: No		

Today Tons:	22.84	Loads:
Tons To Date:	0.00	1
Today Tonnes	20.72	
Tonnes To Date:	0.00	

Carrier : 2347198 RAIO CONTRACTING & MATE
Vehicle: RO223 AM608Y
License: **AM608Y**
MaxGVW: 80,000

By acceptance of this ticket (with or without signature), driver accepts on behalf of themselves/their employer sole responsibility to ensure that the load received is within the weight limit authorized by law and shall hold seller harmless against any and all claims with respect to same
CURB DELIVERY ONLY.NOT RESPONSIBLE FOR ANY DAMAGE BEYOND CURB.

Received:_____ Cust: _____

Weighmaster: Nicole Urbanelli PA#82782
P/D Status: **Pickup**

Customer Do Not Accept [2] Scale: 1

Hanson **Plant: 32112**

Penns Park
852 Swamp Road
Newtown, PA 18940
215-598-3152.

7/2/2018 05:43 In : 5:22:39
Customer: 2193715 NATIONAL PAVING CO INC
Order : FOB - FAA
P.O. :

Tkt. No. **1000206183**

Product 114317
Screenings
S.O. Info.
Ship Ref:

	Pounds	Kilo
Gross	72,640	32,949
Tare	24,960	11,322
Net	47,680	21,627
	23.84 Ton	21.63

	UNIT	TOTALS
Material:		
Freight:		
Tax:		
Fee / Fuel:		
Other Chrg:	No	

Today Tons:	46.68	Loads:
Tons To Date:	0.00	2
Today Tonnes	42.35	
Tonnes To Date:	0.00	

Carrier : 2347198 RAIO CONTRACTING & MATE
Vehicle: RO222 AK269E
License: **ro222**
MaxGVW: 80,000
Received: T. Renzi
Weighmaster: Nicole Urbanelli PA#82782
P/D Status: **Pickup**

By acceptance of this ticket (with or without signature), driver accepts on behalf of themselves/their employer sole responsibility to ensure that the load received is within the weight limit authorized by law and shall hold seller harmless against any and all claims with respect to same
CURB DELIVERY ONLY.NOT RESPONSIBLE FOR ANY DAMAGE BEYOND CURB.

Cust: _____

Customer Do Not Accept [2] Scale: 1

Hanson **Plant: 32112**

Penns Park
852 Swamp Road
Newtown, PA 18940
215-598-3152.

7/2/2018 05:47 In : 5:22:55
Customer: 2193715 NATIONAL PAVING CO INC
Order : FOB - FAA
P.O. :

Tkt. No. **1000206186**

Product 114317
Screenings
S.O. Info:
Ship Ref:

	Pounds	Kilo
Gross	72,980	33,103
Tare	25,160	11,412
Net	47,820	21,691
	23.91 Ton	21.69

	UNIT	TOTALS
Material:		
Freight:		
Tax:		
Fee / Fuel:		
Other Chrg: No		

Today Tons:	70.59	Loads:
Tons To Date:	0.00	3
Today Tonnes	64.04	
Tonnes To Date:	0.00	

Carrier : 2347198 RAIO CONTRACTING & MATE
Vehicle: RO206 AL125T
License: **AL125T**
MaxGVW: 80,000
Received:
Weighmaster: Nicole Urbanelli PA#82782
P/D Status: **Pickup**

By acceptance of this ticket (with or without signature), driver accepts on behalf of themselves/their employer sole responsibility to ensure that the load received is within the weight limit authorized by law and shall hold seller harmless against any and all claims with respect to same
CURB DELIVERY ONLY.NOT RESPONSIBLE FOR ANY DAMAGE BEYOND CURB.

Cust:

Customer Do Not Accept [2] Scale: 1

Hanson **Plant: 32112**

Penns Park
852 Swamp Road
Newtown, PA 18940
215-598-3152.

7/2/2018 05:54 In : 5:30:02
Customer: 2193715 NATIONAL PAVING CO INC
Order : FOB - FAA
P.O. :

Tkt. No. **1000206193**

Product 114317
Screenings
S.O. Info:
Ship Ref:

	Pounds	Kilo
Gross	73,300	33,248
Tare	25,480	11,558
Net	47,820	21,691
	23.91 Ton	21.69

	UNIT	TOTALS
Material:		
Freight:		
Tax:		
Fee / Fuel:		
Other Chrg: No		

Today Tons:	94.50	Loads:
Tons To Date:	0.00	4
Today Tonnes	85.73	
Tonnes To Date:	0.00	

Carrier : 2347198 RAIO CONTRACTING & MATE
Vehicle: RO229 AS812U
License: **AS812U**
MaxGVW: 80,000

By acceptance of this ticket (with or without signature), driver accepts on behalf of themselves/their employer sole responsibility to ensure that the load received is within the weight limit authorized by law and shall hold seller harmless against any and all claims with respect to same
CURB DELIVERY ONLY.NOT RESPONSIBLE FOR ANY DAMAGE BEYOND CURB.

Received:_____ Cust: _____

Weighmaster: Nicole Urbanelli PA#82782
P/D Status: **Pickup**

Customer Do Not Accept [3] Scale: 1

Hanson **Plant: 32112**

Penns Park
852 Swamp Road
Newtown, PA 18940
215-598-3152.

7/2/2018 06:03 In : 5:39:23
Customer: 2193715 NATIONAL PAVING CO INC
Order : FOB - FAA
P.O. :

Tkt. No. **1000206198**

Product 114317
Screenings
S.O. Info:
Ship Ref:

	Pounds	Kilo
Gross	70,800	32,114
Tare	24,760	11,231
Net	46,040	20,883
	23.02 Ton	20.88

	UNIT	TOTALS
Material:		
Freight:		
Tax:		
Fee / Fuel:		
Other Chrg: No		

Today Tons:	117.52	Loads:
Tons To Date:	0.00	5
Today Tonnes	106.61	
Tonnes To Date:	0.00	

Carrier : 2347198 RAIO CONTRACTING & MATE
Vehicle: RO225 AP322C
License: **AP322C**
MaxGVW: 80,000

By acceptance of this ticket (with or without signature), driver accepts on behalf of themselves/their employer sole responsibility to ensure that the load received is within the weight limit authorized by law and shall hold seller harmless against any and all claims with respect to same
CURB DELIVERY ONLY.NOT RESPONSIBLE FOR ANY DAMAGE BEYOND CURB.

Received:_____ Cust: _____

Weighmaster: Nicole Urbanelli PA#82782
P/D Status: **Pickup**

Customer Do Not Accept [3] Scale: 1

Hanson

Plant: 32112

Penns Park
852 Swamp Road
Newtown, PA 18940
215-598-3152

7/2/2018 06:06 In : 5:30:16

Customer: 2193715 NATIONAL PAVING CO INC

Order :

FOB - FAA

P.O. :

Tkt. No. 1000206202

Product 114317

Screenings

S.O. Info:

Ship Ref:

	Pounds	Kilo
Gross	73,020	33,121
Tare	25,360	11,503
Net	47,660	21,618
	23.83 Ton	21.62

	UNIT	TOTALS
Material:		
Freight:		
Tax:		
Fee / Fuel:		
Other Chrg:	No	

Today Tons:	141.35	Loads:
Tons To Date:	0.00	6
Today Tonnes	128.23	
Tonnes To Date:	0.00	

Carrier : 2347198 RAIO CONTRACTING & MATE

Vehicle: RO230 RAIO John

License: .

MaxGVW: 80.000

Received:

Weighmaster: Nicole Urbanelli PA#82782

P/D Status: **Pickup**

By acceptance of this ticket (with or without signature), driver accepts on behalf of themselves/their employer sole responsibility to ensure that the load received is within the weight limit authorized by law and shall hold seller harmless against any and all claims with respect to same

CURB DELIVERY ONLY.NOT RESPONSIBLE FOR ANY DAMAGE BEYOND CURB.

Cust:

Customer Do Not Accept [1] Scale: 1

CRAIG TESTING LABORATORIES, INC.
5439 Harding Highway • P.O. Box 427 • Mays Landing, NJ 08330-0427 • (609) 625-1700 • FAX (609) 625-1798

CLIENT: General Dynamics Information Technology

PROJECT NO.: 811092-2

PROJECT: Reflective Cracking Outdoor Phase I, Building 296 Outdoors, William J. Hughes Technical Center

REPORT NO.: FD-6

INSPECTED BY: Colin Salotti

DATE INSPECTED: July 2, 2018

GEOTECHNICAL REPORT BY: N/A

DATED: N/A

EARTHWORK FIELD INSPECTION REPORT

Item Inspected: ☐ Building Pad ☐ Slab ☐ Foundation ☑ Other: Test Area
☐ Utility Trench ☐ Sub-Grade ☐ Pavement Sub-Base Compactor Model: Wacker Neuson RTSC2

	Location	Dry Density (pcf)	Percent Moisture	Proctor (pcf) ASTM D1557	Optimum Moisture (%)	Compaction Required (%)	Percent Compaction
1	Station 6, Offset 4'	122.4	5.2	124.0	6.8	100.0	98.7%
2	Station 14.5, Offset 0'	126.8	5.3	124.0	6.8	100.0	102.3%
3	Station 29.5, Offset -4'	124.9	6.3	124.0	6.8	100.0	100.7%
4	Station 37.5, Offset 4'	123.4	5.5	124.0	6.8	100.0	99.5%
5	Station 49.5, Offset -1'	121.5	6.4	124.0	6.8	100.0	98.0%
6	Station 60, Offset 0'	125.9	6.1	124.0	6.8	100.0	101.5%
7	Station 66.5, Offset -1'	125.4	4.9	124.0	6.8	100.0	101.1%
8	Station 75, Offset -3'	121.5	4.1	124.0	6.8	100.0	98.0%
9	Station 88, Offset 4'	119.9	3.7	124.0	6.8	100.0	96.7%
10	Station 94, Offset 2'	118.3	3.2	124.0	6.8	100.0	95.4%

Gauge Serial No.: 24540 Gauge Standard Counts: MS: 626 DS: 1846

Fill Placement: ☑ Controlled ☐ Uncontrolled **Loose Lift Thickness (in.):** 10

Hours on Site: 1:00 PM - 4:00 PM

Inspection Findings

Report for Informational Purposes Only

Remarks:

Reported to:
Project Distribution

Reviewed By: Ian Craig

REV 4/17

CRAIG TESTING LABORATORIES, INC.
5439 Harding Highway • P.O. Box 427 • Mays Landing, NJ 08330-0427 • (609) 625-1700 • FAX (609) 625-1798

CLIENT: General Dynamics Information Technology

PROJECT NO.: 811092-2

PROJECT: Reflective Cracking Outdoor Phase I, Building 296 Outdoors, William J. Hughes Technical Center

REPORT NO.: FD-7

INSPECTED BY: Colin Salotti

DATE INSPECTED: July 2, 2018

GEOTECHNICAL REPORT BY: N/A

DATED: N/A

EARTHWORK FIELD INSPECTION REPORT

Item Inspected: ☐ Building Pad ☐ Slab ☐ Foundation ☑ Other: Test Area
☐ Utility Trench ☐ Sub-Grade ☐ Pavement Sub-Base Compactor Model: Wacker Neuson RTSC2

	Location	Dry Density (pcf)	Percent Moisture	Proctor (pcf) ASTM D1557	Optimum Moisture (%)	Compaction Required (%)	Percent Compaction
1	Station 106.5, Offset -3'	124.1	5.2	124.0	6.8	100.0	100.1%
2	Station 113.5, Offset 4'	127.1	5.3	124.0	6.8	100.0	102.5%
3	Station 125.5, Offset 4'	114.2	6.3	124.0	6.8	100.0	92.1%
4	Station 135, Offset -4'	125.6	5.5	124.0	6.8	100.0	101.3%
5	Station 145, Offset 1'	119.6	6.4	124.0	6.8	100.0	96.5%
6	Station 67.5, Offset 1', After soaking and rolls	125.4	5.3	124.0	6.8	100.0	101.1%
7	Station 80.5, Offset 4', After soaking and rolls	122.3	5.4	124.0	6.8	100.0	98.6%
8	Station 90.5, Offset 4', After soaking and rolls	120.5	5.3	124.0	6.8	100.0	97.2%
9	Station 98.5, Offset 1', After soaking and rolls	123.4	4.4	124.0	6.8	100.0	99.5%
10	Station 128.5, Offset -2', After soak and rolls	121.5	4.9	124.0	6.8	100.0	98.0%

Gauge Serial No.: 24540 Gauge Standard Counts: MS: 626 DS: 1846

Fill Placement: ☑ Controlled ☐ Uncontrolled **Loose Lift Thickness (in.):** 10

Hours on Site: 1:00 PM - 4:00 PM

Inspection Findings

Report for Informational Purposes Only

Remarks:

Reported to:
Project Distribution

Reviewed By: Ian Craig

REV 4/17

U.S. Department of Transportation **Federal Aviation Administration**	**Construction Progress and Inspection Report** **NAPMRC**		*Inspection Date* 07/03/2018 *Project Name* Reflective Cracking Outdoor Phase I
Contractor & # of Personnel GDIT - 8	*Contractor & # of Personnel* Gemini - 2	*Contractor & # of Personnel* JBT Building Co.- 3	*Contractor & # of Personnel* Craig Testing - 1

Equipment On-Site

- CAT PS300C (Rolller)
- John Deere 310SG (Backhoe)
- Dynapac CA25D (Roller)
- HPRV (Firetruck)
- Instrotek Nuclear Moisture-Density Gauge

Start Time – 8:00 AM *Stop Time –* 4:30 PM	*Temperature* Min – 84 F Max – 91 F	*Humidity* Min – 59 % Max – 82 %	*Conditions* Fair

Site Activities

Craig Testing personnel arrived at 8AM and began nuclear testing to see how much water we needed to add to the site to raise the moisture content to the specified level. The HPRV sprayed 115 gallons of water on the P-154 surface followed by the Dynapac roller for (9) passes (back and forth equal to 1 pass). The HPRV then sprayed an additional 65 gallons of water followed by the Dynapac Roller for (8) more passes. The CAT PS300C Roller was then brought onsite and used for (6) passes. Density and moisture readings taken at 10" depths in random locations were still not up to spec. The HPRV then sprayed an additional 105 gallons on surface followed by the CAT Roller for (8) more passes. Density and moisture readings taken at random locations still did not reach the required 100% compaction spec. The Dynapac Roller was used to complete (8) more passes. Sand cone readings were taken on centerline at station 0+55 to try and correlate density/moisture readings. Nuclear Density and moisture readings were performed again at a depth of 10" and the values still did not reach the required specification. During testing in the afternoon, the Instrotek Nuclear Moisture-Density Gauge overheated so no more readings could be taken.

Materials Delivered

Materials Removed

Laboratory and Field Testing Performed

Nuclear Density and Moisture Testing, Sand Cone Moisture-Density Test

Meetings/Discussions

None

Safety Concerns

None

Problem Areas/Additional Comments

Instrotek Nuclear Moisture-Density Gauge overheated

INSPECTOR OR REPRESENTATIVE

Date	*Typed or Printed Name and Title*	*Signature*
7/3/18	JOE GAWRYSIAK	

CRAIG TESTING LABORATORIES, INC.
5439 Harding Highway • P.O. Box 427 • Mays Landing, NJ 08330-0427 • (609) 625-1700 • FAX (609) 625-1798

CLIENT: General Dynamics Information Technology

PROJECT NO.: 811092-2

PROJECT: Reflective Cracking Outdoor Phase I, Building 296 Outdoors, William J. Hughes Technical Center

REPORT NO.: FD-8

INSPECTED BY: Colin Salotti

DATE INSPECTED: July 3, 2018

GEOTECHNICAL REPORT BY: N/A

DATED: N/A

EARTHWORK FIELD INSPECTION REPORT

Item Inspected: ☐ Building Pad ☐ Slab ☐ Foundation ☑ Other: Test Area
☐ Utility Trench ☐ Sub-Grade ☐ Pavement Sub-Base Compactor Model: Wacker Neuson RTSC2

	Location	Dry Density (pcf)	Percent Moisture	Proctor (pcf) ASTM D1557	Optimum Moisture (%)	Compaction Required (%)	Percent Compaction
1	Station 10.5, Offset 1'	124.8	6.0	124.0	6.8	100.0	100.6%
2	Station 18.5, Offset -2'	132.9	6.1	124.0	6.8	100.0	107.2%
3	Station 27, Offset 2'	128.5	6.3	124.0	6.8	100.0	103.6%
4	Station 36, Offset -3'	131.5	5.0	124.0	6.8	100.0	106.0%
5	Station 49, Offset 1'	127.8	6.1	124.0	6.8	100.0	103.1%
6	Station 54, Offset 0'	123.3	4.7	124.0	6.8	100.0	99.4%
7	Station 67, Offset -2'	128.2	5.6	124.0	6.8	100.0	103.4%
8	Station 78, Offset 2'	126.1	4.6	124.0	6.8	100.0	101.7%
9	Station 85, Offset -1'	122.8	4.7	124.0	6.8	100.0	99.0%
10	Station 97, Offset 0'	128.0	5.4	124.0	6.8	100.0	103.2%

Gauge Serial No.: 24540 Gauge Standard Counts: MS: 629 DS: 1874

Fill Placement: ☑ Controlled ☐ Uncontrolled **Loose Lift Thickness (in.):** 10

Hours on Site: 8:00 AM - 3:00 PM

Inspection Findings

Report for Informational Purposes Only

Remarks:

I was told that there was a new proctor being worked on when I first arrived. I was never given an official print out with the values, so this report contains the proctor used from the day before.

Reported to:
Project Distribution

Reviewed By: Ian Craig

REV 4/17

CRAIG TESTING LABORATORIES, INC.
5439 Harding Highway • P.O. Box 427 • Mays Landing, NJ 08330-0427 • (609) 625-1700 • FAX (609) 625-1798

CLIENT: General Dynamics Information Technology

PROJECT NO.: 811092-2

PROJECT: Reflective Cracking Outdoor Phase I, Building 296 Outdoors, William J. Hughes Technical Center

REPORT NO.: FD-9

INSPECTED BY: Colin Salotti

DATE INSPECTED: July 3, 2018

GEOTECHNICAL REPORT BY: N/A

DATED: N/A

EARTHWORK FIELD INSPECTION REPORT

Item Inspected: ☐ Building Pad ☐ Slab ☐ Foundation ☑ Other: Test Area
☐ Utility Trench ☐ Sub-Grade ☐ Pavement Sub-Base Compactor Model: Wacker Neuson RTSC2

	Location	Dry Density (pcf)	Percent Moisture	Proctor (pcf) ASTM D1557	Optimum Moisture (%)	Compaction Required (%)	Percent Compaction
1	Station 109, Offset -2'	129.6	6.1	124.0	6.8	100.0	104.5%
2	Station 116, Offset 3'	125.4	6.3	124.0	6.8	100.0	101.1%
3	Station 130, Offset -3'	125.8	6.7	124.0	6.8	100.0	101.5%
4	Station 137, Offset 2'	122.7	5.6	124.0	6.8	100.0	99.0%
5	Station 146, Offset -3'	119.8	4.5	124.0	6.8	100.0	96.6%
6	Station 137, Offset 2', After soaking and rolls	124.3	5.8	124.0	6.8	100.0	100.2%
7	Station 146, Offset -3', After soaking and rolls	123.2	5.3	124.0	6.8	100.0	99.4%
8							
9							
10							

Gauge Serial No.: 24540 Gauge Standard Counts: MS: 629 DS: 1874

Fill Placement: ☑ Controlled ☐ Uncontrolled **Loose Lift Thickness (in.):** 10

Hours on Site: 8:00 PM - 3:00 PM

Inspection Findings

Report for Informational Purposes Only

Remarks:

I was told that there was a new proctor being worked on when I first arrived. I was never given an official print out with the values, so this report contains the proctor used from the day before.

Reported to:
Project Distribution

Reviewed By: Ian Craig

REV 4/17

Field Notes of Craig Testing Nuclear Density Gage Results ASTM D6938					
TO 015 Reflective Cracking Outdoor Phase 1 P-154MR Subgrade					
Performed by Craig Testing Laboratories					
Final Testing results to be provided 7/5/2018					
Notes compiled by Tirupan Mandal 7/3/2018					
Station Range in Relation to Slab Joints	Offset	Station	Dry Density pcf	Percent of Maximum Dry Density %	Moisture %
0+02.5 to 0+12.5	1.00	10.5	124.8	100.6%	6.0
0+12.5 to 0+22.5	-2.00	18.5	132.9	107.2%	6.1
0+22.5 to 0+32.5	2.00	27	128.5	103.6%	6.3
0+32.5 to 0+42.5	-3.00	36	131.5	106.0%	5.0
0+42.5 to 0+52.5	1.00	49	127.8	103.1%	6.1
0+52.5 to 0+62.5	0.00	54	123.3	99.4%	4.7
0+62.5 to 0+72.5	-2.00	67	128.2	103.4%	5.6
0+72.5 to 0+82.5	2.00	78	126.1	101.7%	4.6
0+82.5 to 0+92.5	-1.00	85	122.8	99.0%	4.7
0+92.5 to 1+02.5	0.00	97	128	103.2%	5.4
1+02.5 to 1+12.5	-2.00	109	129.6	104.5%	6.1
1+12.5 to 1+22.5	3.00	116	125.4	101.1%	6.3
1+22.5 to 1+32.5	-3.00	130	125.2	101.0%	6.2
1+32.5 to 1+42.5	2.00	137	124.3	100.2%	5.8
1+42.5 to 1+52.5	-3	146	123.2	99.4%	5.3
		Average:	126.77	1.02	5.6

Field Notes of Craig Testing Nuclear Density Gauge Results ASTM D6938					
TO 015 Reflective Cracking Outdoor Phase 1 P-154MR Subgrade					
Performed by Craig Testing Laboratories					
Final Testing results to be provided 7/5/2018					
Notes compiled by Tirupan Mandal 7/3/2018 - PM Testing					
Station Range in Relation to Slab Joints	Offset	Station	Dry Density pcf	Percent of Maximum Dry Density %	Moisture %
0+02.5 to 0+12.5	-1.00	9			
0+12.5 to 0+22.5	2.00	17			
0+22.5 to 0+32.5	0.00	29			
0+32.5 to 0+42.5	2.00	38			
0+42.5 to 0+52.5	0.00	46			
0+52.5 to 0+62.5	3.00	57			
0+62.5 to 0+72.5	-1.00	65	130.4	105.2%	4.8
0+72.5 to 0+82.5	2.00	79	127.2	102.6%	4.4
0+82.5 to 0+92.5	1.00	86	128.2	103.4%	4.6
0+92.5 to 1+02.5	0.00	99	128.9	104.0%	4.1
1+02.5 to 1+12.5	-1.00	106	131.2	105.8%	3.9
1+12.5 to 1+22.5	2.00	118			
1+22.5 to 1+32.5	0.00	125			
1+32.5 to 1+42.5	-1.00	133			
1+42.5 to 1+52.5	1	144			
		Average:	129.18	1.04	4.4

CRAIG TESTING LABORATORIES, INC.
5439 Harding Highway • P.O. Box 427 • Mays Landing, NJ 08330-0427 • (609) 625-1700 • FAX (609) 625-1798

CLIENT: General Dynamics Information Technology

PROJECT NO.: 811092-2

PROJECT: Reflective Cracking Outdoor Phase I, Building 296 Outdoors, William J. Hughes Technical Center

REPORT NO.: FD-9

INSPECTED BY: Colin Salotti

DATE INSPECTED: July 3, 2018

GEOTECHNICAL REPORT BY: N/A

DATED: N/A

EARTHWORK FIELD INSPECTION REPORT

Item Inspected: ☐ Building Pad ☐ Slab ☐ Foundation ☑ Other: Test Area
☐ Utility Trench ☐ Sub-Grade ☐ Pavement Sub-Base Compactor Model: Wacker Neuson RTSC2

	Location	Dry Density (pcf)	Percent Moisture	Proctor (pcf) ASTM D1557	Optimum Moisture (%)	Compaction Required (%)	Percent Compaction
1	Station 109, Offset -2'	129.6	6.1	124.0	6.8	100.0	104.5%
2	Station 116, Offset 3'	125.4	6.3	124.0	6.8	100.0	101.1%
3	Station 130, Offset -3'	125.8	6.7	124.0	6.8	100.0	101.5%
4	Station 137, Offset 2'	122.7	5.6	124.0	6.8	100.0	99.0%
5	Station 146, Offset -3'	119.8	4.5	124.0	6.8	100.0	96.6%
6	Station 137, Offset 2', After soaking and rolls	124.3	5.8	124.0	6.8	100.0	100.2%
7	Station 146, Offset -3', After soaking and rolls	123.2	5.3	124.0	6.8	100.0	99.4%
8							
9							
10							

Gauge Serial No.: 24540 Gauge Standard Counts: MS: 629 DS: 1874

Fill Placement: ☑ Controlled ☐ Uncontrolled **Loose Lift Thickness (in.):** 10

Hours on Site: 8:00 PM - 3:00 PM

Inspection Findings

Report for Informational Purposes Only

Remarks:

I was told that there was a new proctor being worked on when I first arrived. I was never given an official print out with the values, so this report contains the proctor used from the day before.

Reported to:
Project Distribution

Reviewed By: Ian Craig

REV 4/17

U.S. Department of Transportation
Federal Aviation Administration

Construction Progress and Inspection Report

NAPMRC

Inspection Date
07/05/2018

Project Name
Reflective Cracking Outdoor Phase I

Contractor & # of Personnel	*Contractor & # of Personnel*	*Contractor & # of Personnel*	*Contractor & # of Personnel*
GDIT - 7	Gemini - 1	JBT Building Co.- 1	Craig Testing - 1

Equipment On-Site

- CAT PS300C (Rolller)
- John Deere 310SG (Backhoe)
- Dynapac CA25D (Roller)
- HPRV (Firetruck)
- Instrotek Nuclear Moisture-Density Gauge

Start Time – 8:30 AM *Stop Time –* 4:00 PM	*Temperature* Min – 82 F Max – 88 F	*Humidity* Min – 63 % Max – 88 %	*Conditions* Partly Cloudy, Light Rain

Site Activities

GDIT personnel took sand cone readings at station 0+20 offset 0, station 0+46 offset 0, station 1+02 offset 0.5, and station 1+33 offset 0.5. Craig Testing personnel began Nuclear Gauge testing at 9:10 AM. GDIT personnel covered site prior to quick, heavy rain shower. Site was uncovered after rain shower ended.

Materials Delivered

Materials Removed

Laboratory and Field Testing Performed

Nuclear Density and Moisture Testing, Sand Cone Moisture-Density Test

Meetings/Discussions

None

Safety Concerns

None

Problem Areas/Additional Comments

INSPECTOR OR REPRESENTATIVE

Date	*Typed or Printed Name and Title*	*Signature*
7/5/18	JOE GAWRYSIAK	

CRAIG TESTING LABORATORIES, INC.
5439 Harding Highway • P.O. Box 427 • Mays Landing, NJ 08330-0427 • (609) 625-1700 • FAX (609) 625-1798

CLIENT: General Dynamics Information Technology

PROJECT NO.: 811092-3

PROJECT: Reflective Cracking Outdoor Phase I, Building 296 Outdoors, William J. Hughes Technical Center

REPORT NO.: FD-10

INSPECTED BY: Colin Salotti

DATE INSPECTED: July 5, 2018

GEOTECHNICAL REPORT BY: N/A

DATED: N/A

EARTHWORK FIELD INSPECTION REPORT

Item Inspected: ☐ Building Pad ☐ Slab ☐ Foundation ☐ Other:
☐ Utility Trench ☐ Sub-Grade ☑ Pavement Sub-Base

Compactor Model: Wacker Neuson RTSC2

	Location	Dry Density (pcf)	Percent Moisture	Proctor (pcf) ASTM D1557	Optimum Moisture (%)	Compaction Required (%)	Percent Compaction
1	Station 106.5, Offset -3'	124.1	5.2	124.0	6.8	100.0	100.1%
2	Station 113.5, Offset 4'	127.1	5.3	124.0	6.8	100.0	102.5%
3	Station 125.5, Offset 4'	114.2	6.3	124.0	6.8	100.0	92.1%
4	Station 135, Offset -4'	125.6	5.5	124.0	6.8	100.0	101.3%
5	Station 145, Offset 1'	119.6	6.4	124.0	6.8	100.0	96.5%
6	Station 67.5, Offset 1', After soaking and rolls	125.4	5.3	124.0	6.8	100.0	101.1%
7	Station 80.5, Offset 4', After soaking and rolls	122.3	5.4	124.0	6.8	100.0	98.6%
8	Station 90.5, Offset 4', After soaking and rolls	120.5	5.3	124.0	6.8	100.0	97.2%
9	Station 98.5, Offset 1', After soaking and rolls	123.4	4.4	124.0	6.8	100.0	99.5%
10	Station 128.5, Offset -2', After soak and rolls	121.5	4.9	124.0	6.8	100.0	98.0%

Gauge Serial No.: 24540 Gauge Standard Counts: MS: 629 DS: 1887

Fill Placement: ☐ Controlled ☑ Uncontrolled **Loose Lift Thickness (in.):** -

Hours on Site: 8:00 AM - 11:00 AM

Inspection Findings

Report for Informational Purposes Only

Remarks:

Client representative present during testing and aware of test results below requirements.

Reported to:
Project Distribution

Reviewed By: Ed Freire

REV 4/17

CRAIG TESTING LABORATORIES, INC.
5439 Harding Highway • P.O. Box 427 • Mays Landing, NJ 08330-0427 • (609) 625-1700 • FAX (609) 625-1798

CLIENT: General Dynamics Information Technology

PROJECT NO.: 811092-3

PROJECT: Reflective Cracking Outdoor Phase I, Building 296 Outdoors, William J. Hughes Technical Center

REPORT NO.: FD-11

INSPECTED BY: Colin Salotti

DATE INSPECTED: July 5, 2018

GEOTECHNICAL REPORT BY: N/A

DATED: N/A

EARTHWORK FIELD INSPECTION REPORT

Item Inspected: ☐ Building Pad ☐ Slab ☐ Foundation ☐ Other:
☐ Utility Trench ☐ Sub-Grade ☑ Pavement Sub-Base Compactor Model: Wacker Neuson RTSC2

	Location	Dry Density (pcf)	Percent Moisture	Proctor (pcf) ASTM D1557	Optimum Moisture (%)	Compaction Required (%)	Percent Compaction
1	Station 127, Offset -.5'	133.1	4.5	130.8	7.2	100.0	101.8%
2	Station 137, Offset 0'	132.4	4.6	130.8	7.2	100.0	101.2%
3	Station 146, Offset -1'	136.0	4.8	130.8	7.2	100.0	104.0%
4	Station 20, Offset 0'	134.5	4.9	130.8	7.2	100.0	102.8%
5	Station 10, Offset .5'	132.8	5.2	130.8	7.2	100.0	101.5%
6							
7							
8							
9							
10							

Gauge Serial No.: 24540 Gauge Standard Counts: MS: 629 DS: 1887

Fill Placement: ☐ Controlled ☑ Uncontrolled **Loose Lift Thickness (in.):** -

Hours on Site: 8:00 AM - 11:00 AM

Inspection Findings

Report for Informational Purposes Only

Remarks:

Reported to:
Project Distribution

Reviewed By: Ed Freire

REV 4/17

Field Notes of Craig Testing Nuclear Density Gauge Results ASTM D6938					
TO 015 Reflective Cracking Outdoor Phase 1 P-154MR Subgrade					
Performed by Craig Testing Laboratories					
Final Testing results to be provided 7/6/2018					
Notes compiled by Tirupan Mandal 7/5/2018					
Station Range in Relation to Slab Joints	Offset	Station	Dry Density (lbs/ft^3)	Percent of Maximum Dry Density %	Moisture %
0+02.5 to 0+12.5	0.50	10	132.8	101.5%	5.2
0+12.5 to 0+22.5	1.50	20	129.7	99.2%	4.1
0+12.5 to 0+22.5	0.00	20	134.5	102.8%	4.9
0+22.5 to 0+32.5	1.50	23	136.1	104.1%	5.5
0+32.5 to 0+42.5	1.00	42	132.5	101.3%	4.5
0+42.5 to 0+52.5	1.00	48	133.1	101.8%	5.2
0+52.5 to 0+62.5	2.50	56	132.6	101.4%	4.0
0+62.5 to 0+72.5	-2.00	68	133.8	102.3%	4.2
0+72.5 to 0+82.5	-0.50	76	131.5	100.5%	3.9
0+82.5 to 0+92.5	4.00	89	128.9	98.5%	4.3
0+82.5 to 0+92.5	0.00	89	132.0	100.9%	4.0
0+92.5 to 1+02.5	-3.50	99	132.6	101.4%	5.0
1+02.5 to 1+12.5	1.50	107	128.4	98.2%	3.8
1+02.5 to 1+12.5	-3.50	107	135.4	103.5%	5.7
1+12.5 to 1+22.5	-1.00	116	130.5	99.8%	3.5
1+22.5 to 1+32.5	-0.50	127	133.1	101.8%	4.5
1+32.5 to 1+42.5	0.00	137	132.4	101.2%	4.6
1+42.5 to 1+52.5	-1.00	146	136.0	104.0%	4.8
		Average:	132.6	101.3%	4.5

Density of Soil In Place by Sand Cone Method
ASTM D1556

National Airport Pavement Test Facility
William J. Hughes Technical Center
Atlantic City International Airport
New Jersey 08405

Project: RCO P1 - TO #15

Section: P-154MR **Date:** 7/5/2018 **Technician:** RHN

Prof. Engineer: MTB **Method Used to Dry Soil:** D2216

Test No.	1	2	3	4	5	6	7
Location	0+20	0+46	1+02	1+33			
Soil Description	P-154MR	P-154MR	P-154MR	P-154MR			
Offset (ft.)	0	0	0.5	0			
Depth/Elevation (ft.)	-	-	-	-			
Mass of soil removed (g)	1119.3	1096.4	1141.1	1234.3			
Mass of jar and sand before test (g)	7280.8	6906.0	7194.5	4953.0			
Mass of jar and sand after test (g)	4928.9	4576.2	4858.8	2520.3			
Mass of sand lost in hole and cone (g)	**2351.9**	**2329.8**	**2335.7**	**2432.7**			
Mass of sand in cone (g)	1626.9	1626.9	1626.9	1626.9			
Mass of sand in hole only (g)	**725.0**	**702.9**	**708.8**	**805.8**			
Sand density (g/cm^3)	1.535	1.535	1.535	1.535			
Volume of hole (cm^3)	**472.3**	**457.9**	**461.8**	**525.0**			
Moisture sample can ID	Dirt	2	G1	W4			
Moisture sample can mass (g)	**223.2**	**772.4**	**181.4**	**929.2**			
Mass of wet soil + can (g)	1342.5	1868.8	1322.5	2163.5			
Mass of dry soil + can (g)	1292.9	1813.2	1273.3	2107.5			
Mass of dry soil (g)	**1069.7**	**1040.8**	**1091.9**	**1178.3**			
Mass of water loss (g)	**49.6**	**55.6**	**49.2**	**56.0**			
Moisture content (%)	**4.6%**	**5.3%**	**4.5%**	**4.8%**			
Wet soil density (g/cm^3)	**2.370**	**2.394**	**2.471**	**2.351**			
Dry soil density (g/cm^3)	**2.265**	**2.273**	**2.365**	**2.245**			
Wet soil unit weight (lb/ft^3)	**147.9**	**149.5**	**154.3**	**146.8**			
Dry soil unit weight (lb/ft^3)	**141.4**	**141.9**	**147.6**	**140.1**			

Remarks: Used for internal verification of Nuclear testing results.
Results are not for acceptance or reporting.

Revised: 5/17/2018

U.S. Department of Transportation **Federal Aviation Administration**	**Construction Progress and Inspection Report** **NAPMRC**		*Inspection Date* 07/09/2018 *Project Name* Reflective Cracking Outdoor Phase I
Contractor & # of Personnel GDIT - 6	*Contractor & # of Personnel* JBT Building Co. – 2 United Concrete Inc. - 2	*Contractor & # of Personnel* Gemini - 1	*Contractor & # of Personnel* Rodriguez Consulting - 1

Equipment On-Site

- John Deere 310SG (Backhoe)
- Manitou (Forklift)
- RL-SV2S (Laser Level)
- Pentax AL-320 (Level)
- Leica 3D Scanner
- HAMM HD12 (Roller)
- ZAXIS 160LC (Excavator)

Start Time – 7:00 AM *Stop Time –* 5:15 PM	*Temperature* Min – 73 F Max – 84 F	*Humidity* Min – 41 % Max – 61 %	*Conditions* Fair

Site Activities

JBT Building Co. personnel arrived onsite at 6:30 AM and finished grading the P-154 layer by 8:00 AM. United Concrete Inc. personnel arrived onsite at 7:30 AM and transferred wood from truck to site using Manitou Forklift. United Concrete began assembling forms onsite at 8:30 AM. GDIT personnel surveyed the site to back check final grade elevations. GDIT personnel and Rodriguez Consulting set up Leica 3D Scanner and associated equipment at 9:30 AM and ran Scanner until 11:00 AM. Leica 3D Scan results came up with elevations outside of tolerance of 3/8 in. for select areas. The ZAXIS 160LC Excavator was used to cut areas of P-154 that were above desired elevation. P-154 was added from stockpile by JBT Building Co. personnel into areas that were below desired elevation. After material added, JBT. Building Co personnel rolled and smoothed using HAMM HD12 Roller. GDIT personnel and Rodriguez Consulting set up Leica 3D Scanner equipment at 3:30 PM and completed it at 5:15. Equipment dissembled and stored away by GDIT personnel.

Materials Delivered

Wood for forms

Materials Removed

Small amount of P-154 in the area between Sta. 0+05 to 0+15.

Laboratory and Field Testing Performed

None

Meetings/Discussions

None

Safety Concerns

None

Problem Areas/Additional Comments

Results 1st scan showed low and high areas that were out of tolerance. The areas were addressed and the test section was

INSPECTOR OR REPRESENTATIVE

Date	*Typed or Printed Name and Title*	*Signature*
7/9/18	JOE GAWRYSIAK	

Smoothness/Straightedge Testing

Project: Reflective Cracking Phase I
Date: 7/10/2018
Inspector/Technician: SC, JK, MA

Material: P-154 MR
Deviation Limit: N/A
Specification for Approval: N/A

Test Results									
Station	Transverse Measurements - Pass? (Y/N)					Longitudinal Measurements - Pass? (Y/N)			
	Offset, ft					Offset, ft			
	-6 to +6					-3	+3		
0+10	Y					Y	Y		
0+20	Y					Y	Y		
0+40	Y					Y	Y		
0+60	Y					Y	Y		
0+80	Y					Y	Y		
1+00	N					Y	Y		
1+20	N					Y	Y		
1+40	Y					N	N		
1+45	Y								
# Pass	7	0	0	0	0	7	7	0	0
# Fail	2	0	0	0	0	1	1	0	0
% Fail	22.22	#DIV/0!	#DIV/0!	#DIV/0!	#DIV/0!	12.50	12.50	#DIV/0!	#DIV/0!
Total Passing, %		84.00							

Additional Comments: A longitudinal measurment at station 1+45 was not possible due to the fact that it was at the end of the test section.

U.S. Department of Transportation **Federal Aviation Administration**	**Construction Progress and Inspection Report** **NAPMRC**		*Inspection Date* 07/10/2018 *Project Name* Reflective Cracking Outdoor Phase I
Contractor & # of Personnel GDIT - 6	*Contractor & # of Personnel* Gemini - 2	*Contractor & # of Personnel* Craig Testing - 1	*Contractor & # of Personnel* Rodriguez Consulting - 1

Equipment On-Site

- 12' straight edge
- NOVA Surveying Device
- Instrotek 3440 Nuclear Moisture-Density Gauge

Start Time – 11:50 AM *Stop Time –* 4:30 PM	*Temperature* Min – 79 F Max – 93 F	*Humidity* Min – 34 % Max – 62 %	*Conditions* Fair

Site Activities

GDIT personnel performed straightedge testing from 11:50 AM to 12:30 PM. 21 out of 25 straightedge readings passed the 3/8" inch tolerance. Rodriguez Consulting was onsite to survey from 12:00 PM to 3:25 PM. Craig Testing arrived at 1:30 PM to perform Nuclear Moisture-Density Gauge testing at a depth of 8". Rodriguez Consulting was onsite to survey from 12:00 PM to 3:25 PM. Rodriguez marked out the 8 points for corners of the forms at the following locations: Sta. 0+00, 3' offset; Sta. 0+50, 3' offset; Sta. 1+00, 3' offset; Sta. 1+50, 3' offset; Sta. 0+00, 2' offset; Sta. 0+50, 2' offset; Sta. 1+00, 2' offset; Sta. 1+50, 2' offset.

Materials Delivered

None

Materials Removed

None

Laboratory and Field Testing Performed

Straight Edge Testing
Nuclear Moisture-Density

Meetings/Discussions

None

Safety Concerns

None

Problem Areas/Additional Comments

INSPECTOR OR REPRESENTATIVE

Date	*Typed or Printed Name and Title*	*Signature*
7/10/18	JOE GAWRYSIAK	

CRAIG TESTING LABORATORIES, INC.
5439 Harding Highway • P.O. Box 427 • Mays Landing, NJ 08330-0427 • (609) 625-1700 • FAX (609) 625-1798

CLIENT: General Dynamics Information Technology

PROJECT NO.: 811092-3

PROJECT: Reflective Cracking Outdoor Phase I, Building 296 Outdoors, William J. Hughes Technical Center

REPORT NO.: FD-12

INSPECTED BY: Reflective Cracking Project Atlan

DATE INSPECTED: July 10, 2018

GEOTECHNICAL REPORT BY: N/A

DATED: N/A

EARTHWORK FIELD INSPECTION REPORT

Item Inspected: ☐ Building Pad ☐ Slab ☐ Foundation ☐ Other:
☐ Utility Trench ☐ Sub-Grade ☑ Pavement Sub-Base Compactor Model: Wacker Neuson RTSC2

	Location	Dry Density (pcf)	Percent Moisture	Proctor (pcf) ASTM D1557	Optimum Moisture (%)	Compaction Required (%)	Percent Compaction
1	Station 11, Offset 0'	127.4	3.0	130.8	7.2	100.0	97.4%
2	Station 17.5, Offset 2.5'	131.7	2.7	130.8	7.2	100.0	100.7%
3	Station 30.5, Offset -2'	134.8	2.9	130.8	7.2	100.0	103.1%
4	Station 39.5, Offset 2'	128.5	2.8	130.8	7.2	100.0	98.2%
5	Station 46.5, Offset 3'	130.7	2.4	130.8	7.2	100.0	99.9%
6	Station 55.5, Offset -5'	129.4	2.4	130.8	7.2	100.0	98.9%
7	Station 64.5, Offset 1'	126.9	2.7	130.8	7.2	100.0	97.0%
8	Station 78.5, Offset 0'	126.2	2.2	130.8	7.2	100.0	96.5%
9	Station 83.5, Offset 3'	126.8	2.1	130.8	7.2	100.0	96.9%
10	Station 96.5, Offset -.5'	130.1	2.4	130.8	7.2	100.0	99.5%

Loose Lift Thickness (in.): -

Fill Placement: ☑ Controlled ☐ Uncontrolled

Continued on following page . . .

CRAIG TESTING LABORATORIES, INC.
5439 Harding Highway • P.O. Box 427 • Mays Landing, NJ 08330-0427 • (609) 625-1700 • FAX (609) 625-1798

CLIENT: General Dynamics Information Technology

PROJECT NO.: 811092-3

PROJECT: Reflective Cracking Outdoor Phase I, Building 296 Outdoors, William J. Hughes Technical Center

REPORT NO.: FD-12

INSPECTED BY: Reflective Cracking Project Atlan

DATE INSPECTED: July 10, 2018

GEOTECHNICAL REPORT BY: N/A

DATED: N/A

EARTHWORK FIELD INSPECTION REPORT

Item Inspected: ☐ Building Pad ☐ Slab ☐ Foundation ☐ Other:
☐ Utility Trench ☐ Sub-Grade ☑ Pavement Sub-Base

Compactor Model: Wacker Neuson RTSC2

	Location	Dry Density (pcf)	Percent Moisture	Proctor (pcf) ASTM D1557	Optimum Moisture (%)	Compaction Required (%)	Percent Compaction
11	Station 104.5, Offset 1'	126.7	2.3	130.8	7.2	100.0	96.9%
12	Station 115.5, Offset 2.5'	128.1	2.5	130.8	7.2	100.0	97.9%
13	Station 127, Offset 1'	122.7	2.4	130.8	7.2	100.0	93.8%
14	Station 137.5, Offset -2'	126.6	2.3	130.8	7.2	100.0	96.8%
15	Station 143, Offset 0'	127.0	2.6	130.8	7.2	100.0	97.1%
16	Station 68, Offset -2'	131.5	2.3	130.8	7.2	100.0	100.5%
17	Station 87, Offset 0'	128.5	1.9	130.8	7.2	100.0	98.2%
18	Station 92, Offset -6'	126.9	3.2	130.8	7.2	100.0	97.0%
19	Station 102, Offset -3.5'	134.5	2.7	130.8	7.2	100.0	102.8%
20	Station 146, Offset -1'	128.2	2.8	130.8	7.2	100.0	98.0%

Gauge Serial No.: 24540 Gauge Standard Counts: MS: 628 DS: 1864

Fill Placement: ☐ Controlled ☑ Uncontrolled **Loose Lift Thickness (in.):** -

Hours on Site: 1:00 PM-3:00 PM

Inspection Findings

Report for Informational Purposes Only

Remarks:

Client representative present during testing and aware of test results below requirements.

Reported to:
Project Distribution

Reviewed By: Ed Freire

REV 4/17

Field Notes of Craig Testing Nuclear Density Gauge Results ASTM D6938					
TO 015 Reflective Cracking Outdoor Phase 1 P-154MR Subgrade					
Performed by Craig Testing Laboratories @ 8" depth					
Final Testing results to be provided 7/11/2018					
Notes compiled by Tirupan Mandal 7/10/2018					
Station Range in Relation to Slab Joints	Offset	Station	Dry Density (lbs/ft^3)	Percent of Maximum Dry Density %	Moisture %
0+02.5 to 0+12.5	0.00	11	127.4	97.4%	3.0
0+12.5 to 0+22.5	2.50	17.5	131.7	100.7%	2.7
0+22.5 to 0+32.5	-2.00	30.5	134.8	103.1%	2.9
0+32.5 to 0+42.5	2.00	39.5	128.5	98.2%	2.8
0+42.5 to 0+52.5	3.00	46.5	130.7	99.9%	2.4
0+52.5 to 0+62.5	-3.00	55.5	129.4	98.9%	2.4
0+62.5 to 0+72.5	2.00	64.5	126.9	97.0%	2.3
0+72.5 to 0+82.5	0.00	78.5	126.2	96.5%	2.2
0+82.5 to 0+92.5	3.00	83.5	126.8	96.9%	2.1
0+92.5 to 1+02.5	-0.50	96.5	130.8	100.0%	2.4
1+02.5 to 1+12.5	1.00	104.5	126.7	96.9%	2.3
1+12.5 to 1+22.5	2.50	115.5	128.1	97.9%	2.5
1+22.5 to 1+32.5	1.00	127	122.7	93.8%	2.4
1+32.5 to 1+42.5	-2.00	137.5	126.6	96.8%	2.3
1+42.5 to 1+52.5	0.00	143	127.0	97.1%	2.6
		Average:	128.3	98.1%	2.5

U.S. Department of Transportation **Federal Aviation Administration**	**Construction Progress and Inspection Report** **NAPMRC**		*Inspection Date* 07/11/2018 *Project Name* Reflective Cracking Outdoor Phase I
Contractor & # of Personnel GDIT - 9	*Contractor & # of Personnel*	*Contractor & # of Personnel*	*Contractor & # of Personnel*
Equipment On-Site • FAA Firetruck Engine #5 • BOMAG (Soil Stabilizer)			
Start Time – 12:30 PM *Stop Time –* 4:30 PM	*Temperature* Min – 61 F Max – 70 F	*Humidity* Min – 34 % Max – 63 %	*Conditions* Fair, Cloudy
Site Activities GDIT personnel brought the BOMAG Soil Stabilizer onsite and prepared it to be used the following day. GDIT personnel sprayed down and soaked the P-154 material using FAA Firetruck Engine #5 with 1300 gallons of water at 1:30 PM. Sandbags were placed at Sta. 0+75 to prevent water running down to low point of site (NW corner). A tarp was placed over the wet surface to prevent evaporation overnight as the water soaked in.			
Materials Delivered None			
Materials Removed None			
Laboratory and Field Testing Performed Moisture Test			
Meetings/Discussions None			
Safety Concerns None			
Problem Areas/Additional Comments			
INSPECTOR OR REPRESENTATIVE			
Date 7/11/18	*Typed or Printed Name and Title* JOE GAWRYSIAK	*Signature* Joe	

U.S. Department of Transportation **Federal Aviation Administration**	**Construction Progress and Inspection Report** **NAPMRC**		*Inspection Date* 07/12/2018 *Project Name* Reflective Cracking Outdoor Phase I
Contractor & # of Personnel GDIT - 12	*Contractor & # of Personnel* Gemini - 2	*Contractor & # of Personnel* JBT Building Co. - 2 United Concrete - 1	*Contractor & # of Personnel* Craig Testing - 1

Equipment On-Site

- HPRV (Firetruck)
- BOMAG (Soil Stabilizer)
- Hitachi ZAXIS 160LC (Excavator)
- John Deere 310SG (Backhoe)
- Lee G440 (Power Grader)
- Dynapac (Roller)
- Instrotek 3430 Nuclear Density-Moisture Gauge
- CAT PS300C (Rubber Tire Roller)

Start Time – 7:15 PM *Stop Time –* 4:30 PM	*Temperature* Min – 73 F Max – 83 F	*Humidity* Min – 47 % Max – 90 %	*Conditions* Fair, Cloudy

Site Activities

JBT Building Co. arrived onsite at 7:15 AM to prepare equipment. United Concrete Inc. arrived at 8:20 AM and welded together dowel baskets with #8 dowels for the remainder of the day. GDIT took moisture samples to fill a 5-gallon bucket at random locations. Craig Testing was onsite all day and took Nuclear Moisture-Density readings at 6 random locations each at a depth of 4 in., 6 in., and 8 in at the following locations: Sta. 0+35, -1 Lt; Sta. 0+60, 0'; Sta. 0+75, +3.5 Rt; Sta. 0+95, -2.5 Lt; Sta. 1+04.5, -2 Lt and Sta. 1+32, +3.5 Rt. GDIT personnel wetted the P-154 material with the HPRV prior to tilling. JBT Building Co. operated the BOMAG to scarify the entire lift of P-154 to an average depth of 4". GDIT personnel sprayed an additional 450 gallons of water on scarified material. JBT Building Co. used John Deere 310SG Backhoe to place excess P-154 that was stored onsite. A Lee G440 grader was then used to roughly grade the surface. GDIT personnel took survey points at 5 lowest points to see if filling was necessary before compaction. JBT Building Co. personnel filled more material in spots with slightly low elevations and then GDIT personnel sprayed 350 gallons on the material. It was then covered with the tarp so water could soak in. After waiting an hour, JBT Construction Co. rolled the material with the Dynapac Roller for 2 passes (up and back equal to 1 pass) and rolled the site with CAT PS300C for 2 more passes. Craig Testing performed nuclear gauge testing at random locations to determine compaction and moisture %. Material was very wet and soft in some locations. GDIT personnel covered site at end of day and to resume testing in the morning.

Materials Delivered

None

Materials Removed

None

Laboratory and Field Testing Performed

Compaction and Moisture Testing

Meetings/Discussions

None

Safety Concerns

None

Problem Areas/Additional Comments		
INSPECTOR OR REPRESENTATIVE		
Date	*Typed or Printed Name and Title*	*Signature*
7/12/18	JOE GAWRYSIAK	

CRAIG
TESTING LABORATORIES, INC.
5439 Harding Highway • P.O. Box 427 • Mays Landing, NJ 08330-0427 • (609) 625-1700 • FAX (609) 625-1798

CLIENT: General Dynamics Information Technology

PROJECT NO.: 811092-3

PROJECT: Reflective Cracking Outdoor Phase I, Building 296 Outdoors, William J. Hughes Technical Center

REPORT NO.: FD-13

INSPECTED BY: Reflective Cracking Project Atlan

DATE INSPECTED: July 12, 2018

GEOTECHNICAL REPORT BY: N/A

DATED: N/A

EARTHWORK FIELD INSPECTION REPORT

Item Inspected: ☐ Building Pad ☐ Slab ☐ Foundation ☐ Other:
☐ Utility Trench ☐ Sub-Grade ☑ Pavement Sub-Base Compactor Model: PS-300C

	Location	Dry Density (pcf)	Percent Moisture	Proctor (pcf) ASTM D1557	Optimum Moisture (%)	Compaction Required (%)	Percent Compaction
1	Station 35, Offset -1', 4" Depth	137.1	3.8	130.8	7.2	100.0	104.8%
2	Station 35, Offset -1', 6" Depth	137.2	3.4	130.8	7.2	100.0	104.9%
3	Station 35, Offset -1', 8" Depth	135.2	3.6	130.8	7.2	100.0	103.4%
4	Station 60, Offset 0', 4" Depth	131.9	4.8	130.8	7.2	100.0	100.8%
5	Station 60, Offset 0', 6" Depth	128.9	4.7	130.8	7.2	100.0	98.5%
6	Station 60, Offset 0', 8" Depth	128.6	4.8	130.8	7.2	100.0	98.3%
7	Station 75, Offset +3.5', 4" Depth	129.2	4.3	130.8	7.2	100.0	98.8%
8	Station 75, Offset +3.5', 6" Depth	129.2	3.9	130.8	7.2	100.0	98.8%
9	Station 75, Offset +3.5', 8" Depth	129.0	4.6	130.8	7.2	100.0	98.6%
10	Station 103.5, Offset -2', 4" Depth	132.5	3.3	130.8	7.2	100.0	101.3%

Loose Lift Thickness (in.): -

Fill Placement: ☐ Controlled ☑ Uncontrolled

Continued on following page . . .

CRAIG TESTING LABORATORIES, INC.
5439 Harding Highway • P.O. Box 427 • Mays Landing, NJ 08330-0427 • (609) 625-1700 • FAX (609) 625-1798

CLIENT: General Dynamics Information Technology

PROJECT NO.: 811092-3

PROJECT: Reflective Cracking Outdoor Phase I, Building 296 Outdoors, William J. Hughes Technical Center

REPORT NO.: FD-13

INSPECTED BY: Reflective Cracking Project Atlan

DATE INSPECTED: July 12, 2018

GEOTECHNICAL REPORT BY: N/A

DATED: N/A

EARTHWORK FIELD INSPECTION REPORT

Item Inspected: ☑ Building Pad ☐ Slab ☐ Foundation ☐ Other:
☐ Utility Trench ☐ Sub-Grade ☐ Pavement Sub-Base Compactor Model: PS-300C

	Location	Dry Density (pcf)	Percent Moisture	Proctor (pcf) ASTM D1557	Optimum Moisture (%)	Compaction Required (%)	Percent Compaction
11	Station 103.5, Offset -2', 6" Depth	129.7	3.5	130.8	7.2	100.0	99.2%
12	Station 103.5, Offset -2', 8" Depth	127.2	3.9	130.8	7.2	100.0	97.2%
13	Station 132, Offset +3.5',4" Depth	124.9	4.7	130.8	7.2	100.0	95.5%
14	Station 132, Offset +3.5', 6" Depth	122.5	4.8	130.8	7.2	100.0	93.7%
15	Station 132, Offset +3.5', 8" Depth	122.2	4.8	130.8	7.2	100.0	93.4%
16	Station 95, Offset -2.15',4" Depth	136.4	4.2	130.8	7.2	100.0	104.3%
17	Station 95, Offset -2.15', 6" Depth	135.2	4.1	130.8	7.2	100.0	103.4%
18	Station 95, Offset -2.15', 8" Depth	133.9	3.7	130.8	7.2	100.0	102.4%
19	Station 75, Offset -1', 8" Depth	129.3	10.6	130.8	7.2	100.0	98.9%
20	Station 48, Offset +3', 8" Depth	128.8	9.9	130.8	7.2	100.0	98.5%

Gauge Serial No.: 24540 Gauge Standard Counts: MS: 629 DS: 1880

Fill Placement: ☐ Controlled ☑ Uncontrolled **Loose Lift Thickness (in.):** -

Hours on Site: 9:00 AM-4:00 PM

Inspection Findings

Report for Informational Purposes Only

Remarks:

All tests that were taken in sets of three were conducted before wetting the soils. While the following four were taking after moisture was added. Client representative present during testing and aware of test results

Reported to:
Project Distribution

Reviewed By: Ed Freire

REV 4/17

CRAIG TESTING LABORATORIES, INC.
5439 Harding Highway • P.O. Box 427 • Mays Landing, NJ 08330-0427 • (609) 625-1700 • FAX (609) 625-1798

CLIENT: General Dynamics Information Technology

PROJECT NO.: 811092-3

PROJECT: Reflective Cracking Outdoor Phase I, Building 296 Outdoors, William J. Hughes Technical Center

REPORT NO.: FD-14

INSPECTED BY: Colin Salotti

DATE INSPECTED: July 12, 2018

GEOTECHNICAL REPORT BY: N/A

DATED: N/A

EARTHWORK FIELD INSPECTION REPORT

Item Inspected: ☐ Building Pad ☐ Slab ☐ Foundation ☐ Other: ☐ Utility Trench ☐ Sub-Grade ☑ Pavement Sub-Base

Compactor Model: PS-300C

	Location	Dry Density (pcf)	Percent Moisture	Proctor (pcf) ASTM D1557	Optimum Moisture (%)	Compaction Required (%)	Percent Compaction
1	Station 112, Offset -1.5', 8" Depth	120.2	13.9	130.8	7.2	100.0	91.9%
2	Station 127.5, Offset 3.5', 8" Depth	123.1	11.1	130.8	7.2	100.0	94.1%
3							
4							
5							
6							
7							
8							
9							
10							

Gauge Serial No.: 24540

Gauge Standard Counts: MS: 629 DS: 1880

Fill Placement: ☐ Controlled ☑ Uncontrolled

Loose Lift Thickness (in.): -

Hours on Site: 9:00 AM-4:00 PM

Inspection Findings

Report for Informational Purposes Only

Remarks:

All tests that were taken in sets of three were conducted before wetting the soils. While the following four were taking after moisture was added. Client representative present during testing and aware of test results

Reported to:

Project Distribution

Reviewed By: Ed Freire

REV 4/17

U.S. Department of Transportation **Federal Aviation Administration**	**Construction Progress and Inspection Report** **NAPMRC**		*Inspection Date* 07/13/2018 *Project Name* Reflective Cracking Outdoor Phase I
Contractor & # of Personnel GDIT - 11	*Contractor & # of Personnel* Gemini - 3	*Contractor & # of Personnel* JBT Building Co. - 2 United Concrete - 1	*Contractor & # of Personnel* Craig Testing - 1

Equipment On-Site

- John Deere 310SG (Backhoe)
- Lee G440 (Power Grader)
- Dynapac (Roller)
- Instrotek 3430 Nuclear Density-Moisture Gauge
- CAT PS300C (Rubber Tire Roller)
- RL-SV2S (Laser Level)
- Pentax AL-320 (Level)

Start Time – 7:45 PM *Stop Time –* 4:30 PM	*Temperature* Min – 68 F Max – 83 F	*Humidity* Min – 46 % Max – 100 %	*Conditions* Fair

Site Activities

JBT Construction Co. personnel arrived onsite at 7:00 AM and rolled the area prior to Nuclear Moisture-Density tests. (2) Passes were completed (back and forth equal to 1 pass) with the Dynapac Roller and an additional (2) passes with the CAT PS300C Roller. Craig Testing personnel operated the Nuclear Density-Moisture Gauge and took readings at random locations to determine compaction and moisture %. Values ranged from 124.2 pcf to 132.5 pcf with mositures ranging from 7.5 to 10.0. JBT Construction Co. personnel graded the site using a Lee G440 Power Grader to trim and level the material prior to additional compaction. JBT then completed (2) additional passes with each roller (Dynpac and CAT PS300C). GDIT personnel used the Pentax AL-320 Level to verify all points were above proposed grade. Craig Testing performed Nuclear Moisture-Density tests at predetermined random locations at depths of 4", 6" and 8" depths for a total of (45) tests @ 60 seconds each. GDIT personnel covered the site at the end of the shift.

Materials Delivered

None

Materials Removed

None

Laboratory and Field Testing Performed

Nuclear Moisture-Density Testing

Meetings/Discussions

None

Safety Concerns

None

Problem Areas/Additional Comments

Area was wet and soft in many spots, will leave covered for the weekend and allow moisture to soak into lower region.

INSPECTOR OR REPRESENTATIVE

Date	*Typed or Printed Name and Title*	*Signature*
7/13/18	JOE GAWRYSIAK	

CRAIG
TESTING LABORATORIES, INC.
5439 Harding Highway • P.O. Box 427 • Mays Landing, NJ 08330-0427 • (609) 625-1700 • FAX (609) 625-1798

CLIENT: General Dynamics Information Technology

PROJECT NO.: 811092-3

PROJECT: Reflective Cracking Outdoor Phase I, Building 296 Outdoors, William J. Hughes Technical Center

REPORT NO.: FD-15

INSPECTED BY: Reflective Cracking Project Atlan

DATE INSPECTED: July 13, 2018

GEOTECHNICAL REPORT BY: N/A

DATED: N/A

EARTHWORK FIELD INSPECTION REPORT

Item Inspected: ☐ Building Pad ☐ Slab ☐ Foundation ☐ Other:
☐ Utility Trench ☐ Sub-Grade ☑ Pavement Sub-Base Compactor Model: PS-300C

	Location	Dry Density (pcf)	Percent Moisture	Proctor (pcf) ASTM D1557	Optimum Moisture (%)	Compaction Required (%)	Percent Compaction
1	Station 87, Offset 1', 8" Depth	128.8	9.6	130.8	7.2	100.0	98.5%
2	Station 122, Offset -1.5', 8" Depth	126.0	11.9	130.8	7.2	100.0	96.3%
3	Station .5, Offset -3.4', 8" Depth	129.2	9.4	130.8	7.2	100.0	98.8%
4	Station 31.5, Offset 4', 8" Depth	127.7	10.0	130.8	7.2	100.0	97.6%
5	Station 52.5, Offset -.5', 8" Depth	136.5	9.8	130.8	7.2	100.0	104.4%
6	Station 75, Offset 3', 8" Depth	132.5	8.4	130.8	7.2	100.0	101.3%
7	Station 87, Offset -1.5', 8" Depth	128.8	9.9	130.8	7.2	100.0	98.5%
8	Station 113, Offset 4', 8" Depth	130.2	9.8	130.8	7.2	100.0	99.5%
9	Station 133, Offset 4', 8" Depth	131.0	9.1	130.8	7.2	100.0	100.2%
10	Station 146, Offset -.5', 8" Depth	127.5	8.6	130.8	7.2	100.0	97.5%

Loose Lift Thickness (in.): -

Fill Placement: ☐ Controlled ☑ Uncontrolled

Continued on following page . . .

CRAIG TESTING LABORATORIES, INC.
5439 Harding Highway • P.O. Box 427 • Mays Landing, NJ 08330-0427 • (609) 625-1700 • FAX (609) 625-1798

CLIENT: General Dynamics Information Technology

PROJECT NO.: 811092-3

PROJECT: Reflective Cracking Outdoor Phase I, Building 296 Outdoors, William J. Hughes Technical Center

REPORT NO.: FD-15

INSPECTED BY: Reflective Cracking Project Atlan

DATE INSPECTED: July 13, 2018

GEOTECHNICAL REPORT BY: N/A

DATED: N/A

EARTHWORK FIELD INSPECTION REPORT

Item Inspected: ☐ Building Pad ☐ Slab ☐ Foundation ☐ Other: ☐ Utility Trench ☐ Sub-Grade ☑ Pavement Sub-Base

Compactor Model: PS-300C

	Location	Dry Density (pcf)	Percent Moisture	Proctor (pcf) ASTM D1557	Optimum Moisture (%)	Compaction Required (%)	Percent Compaction
11	Station 145.5, Offset -1', 8" Depth	125.8	8.5	130.8	7.2	100.0	96.2%
12	Station 145.5, Offset -1', 6" Depth	127.7	8.2	130.8	7.2	100.0	97.6%
13	Station 137, Offset .5', 8" Depth	129.5	8.9	130.8	7.2	100.0	99.0%
14	Station 137, Offset .5', 6" Depth	131.3	9.0	130.8	7.2	100.0	100.4%
15	Station 137, Offset .5', 4" Depth	132.2	8.5	130.8	7.2	100.0	101.1%
16	Station 124.5, Offset 0', 8" Depth	131.8	8.4	130.8	7.2	100.0	100.8%
17	Station 124.5, Offset 0', 6" Depth	132.9	8.1	130.8	7.2	100.0	101.6%
18	Station 124.5, Offset 0', 4" Depth	133.3	8.3	130.8	7.2	100.0	101.9%
19	Station 117.5, Offset 1.5', 8" Dep.	131.1	8.4	130.8	7.2	100.0	100.2%
20	Station 117.5, Offset 1.5', 6" Dep.	133.0	8.2	130.8	7.2	100.0	101.7%

Gauge Serial No.: 24540 Gauge Standard Counts: MS: 599 DS: 1865

Fill Placement: ☐ Controlled ☑ Uncontrolled **Loose Lift Thickness (in.):** -

Hours on Site: 7:00 AM-4:00 PM

Inspection Findings

Report for Informational Purposes Only

Remarks:

Tests 1 and 2 were taken at 8 AM. Tests 3-10 were taken at 11 AM. The rest of the tests were taken at 3 PM. Client representative present during testing and aware of test results below requirements.

Reported to:
Project Distribution

Reviewed By: Ed Freire

CRAIG TESTING LABORATORIES, INC.
5439 Harding Highway • P.O. Box 427 • Mays Landing, NJ 08330-0427 • (609) 625-1700 • FAX (609) 625-1798

CLIENT: General Dynamics Information Technology

PROJECT NO.: 811092-3

PROJECT: Reflective Cracking Outdoor Phase I, Building 296 Outdoors, William J. Hughes Technical Center

REPORT NO.: FD-16

INSPECTED BY: Reflective Cracking Project Atlan

DATE INSPECTED: July 13, 2018

GEOTECHNICAL REPORT BY: N/A

DATED: N/A

EARTHWORK FIELD INSPECTION REPORT

Item Inspected: ☐ Building Pad ☐ Slab ☐ Foundation ☐ Other:
☐ Utility Trench ☐ Sub-Grade ☑ Pavement Sub-Base Compactor Model: PS-300C

	Location	Dry Density (pcf)	Percent Moisture	Proctor (pcf) ASTM D1557	Optimum Moisture (%)	Compaction Required (%)	Percent Compaction
1	Station 117.5, Offset 1.5', 4" Dep.	133.2	8.1	130.8	7.2	100.0	101.8%
2	Station 106, Offset -2', 8" Depth	129.6	8.6	130.8	7.2	100.0	99.1%
3	Station 106, Offset -2', 6" Depth	131.0	8.5	130.8	7.2	100.0	100.2%
4	Station 106, Offset -2', 4" Depth	132.2	8.6	130.8	7.2	100.0	101.1%
5	Station 96, Offset -1.5', 8" Depth	128.8	9.6	130.8	7.2	100.0	98.5%
6	Station 96, Offset -1.5', 6" Depth	130.1	9.7	130.8	7.2	100.0	99.5%
7	Station 96, Offset -1.5', 4" Depth	130.8	9.7	130.8	7.2	100.0	100.0%
8	Station 87.5, Offset 0', 8" Depth	132.5	7.7	130.8	7.2	100.0	101.3%
9	Station 87.5, Offset 0', 6" Depth	132.8	7.3	130.8	7.2	100.0	101.5%
10	Station 87.5, Offset 0', 4" Depth	133.8	7.6	130.8	7.2	100.0	102.3%

Loose Lift Thickness (in.): -

Fill Placement: ☐ Controlled ☑ Uncontrolled

Continued on following page . . .

CRAIG TESTING LABORATORIES, INC.
5439 Harding Highway • P.O. Box 427 • Mays Landing, NJ 08330-0427 • (609) 625-1700 • FAX (609) 625-1798

CLIENT: General Dynamics Information Technology

PROJECT NO.: 811092-3

PROJECT: Reflective Cracking Outdoor Phase I, Building 296 Outdoors, William J. Hughes Technical Center

REPORT NO.: FD-16

INSPECTED BY: Reflective Cracking Project Atlan

DATE INSPECTED: July 13, 2018

GEOTECHNICAL REPORT BY: N/A

DATED: N/A

EARTHWORK FIELD INSPECTION REPORT

Item Inspected: ☑ Building Pad ☐ Slab ☐ Foundation ☐ Other: ☐ Utility Trench ☐ Sub-Grade ☐ Pavement Sub-Base

Compactor Model: PS-300C

	Location	Dry Density (pcf)	Percent Moisture	Proctor (pcf) ASTM D1557	Optimum Moisture (%)	Compaction Required (%)	Percent Compaction
11	Station 75.5, Offset 2', 8" Depth	133.4	6.9	130.8	7.2	100.0	102.0%
12	Station 75.5, Offset 2', 6" Depth	134.4	7.0	130.8	7.2	100.0	102.8%
13	Station 75.5, Offset 2', 4" Depth	136.4	6.5	130.8	7.2	100.0	104.3%
14	Station 67.5, Offset 1', 8" Depth	131.5	8.8	130.8	7.2	100.0	100.5%
15	Station 67.5, Offset 1', 6" Depth	132.3	8.8	130.8	7.2	100.0	101.1%
16	Station 67.5, Offset 1', 4" Depth	132.0	7.8	130.8	7.2	100.0	100.9%
17	Station 55, Offset -1.5', 8" Depth	131.9	7.9	130.8	7.2	100.0	100.8%
18	Station 55, Offset -1.5', 6" Depth	133.2	8.0	130.8	7.2	100.0	101.8%
19	Station 55, Offset -1.5', 4" Depth	134.0	7.9	130.8	7.2	100.0	102.4%
20	Station 48, Offset 2.5', 8" Depth	133.1	7.7	130.8	7.2	100.0	101.8%

Gauge Serial No.: 24540

Gauge Standard Counts: MS: 599 DS: 1865

Fill Placement: ☐ Controlled ☑ Uncontrolled

Loose Lift Thickness (in.): -

Hours on Site: 7:00 AM-4:00 PM

Inspection Findings

Report for Informational Purposes Only

Remarks:

All of these tests were taken at 3 PM. Client representative present during testing and aware of test results below requirements.

Reported to:

Project Distribution

Reviewed By: Ed Freire

REV 4/17

CRAIG TESTING LABORATORIES, INC.
5439 Harding Highway • P.O. Box 427 • Mays Landing, NJ 08330-0427 • (609) 625-1700 • FAX (609) 625-1798

CLIENT: General Dynamics Information Technology

PROJECT NO.: 811092-3

PROJECT: Reflective Cracking Outdoor Phase I, Building 296 Outdoors, William J. Hughes Technical Center

REPORT NO.: FD-17

INSPECTED BY: Reflective Cracking Project Atlan

DATE INSPECTED: July 13, 2018

GEOTECHNICAL REPORT BY: N/A

DATED: N/A

EARTHWORK FIELD INSPECTION REPORT

Item Inspected: ☐ Building Pad ☐ Slab ☐ Foundation ☐ Other:
☐ Utility Trench ☐ Sub-Grade ☑ Pavement Sub-Base Compactor Model: PS-300C

	Location	Dry Density (pcf)	Percent Moisture	Proctor (pcf) ASTM D1557	Optimum Moisture (%)	Compaction Required (%)	Percent Compaction
1	Station 48, Offset 2.5', 6" Depth	133.6	8.0	130.8	7.2	100.0	102.1%
2	Station 48, Offset 2.5', 4" Depth	135.4	7.6	130.8	7.2	100.0	103.5%
3	Station 37.5, Offset 0', 8" Depth	133.5	8.4	130.8	7.2	100.0	102.1%
4	Station 37.5, Offset 0', 6" Depth	133.9	8.1	130.8	7.2	100.0	102.4%
5	Station 37.5, Offset 0', 4" Depth	133.9	8.1	130.8	7.2	100.0	102.4%
6	Station 26, Offset -1', 8" Depth	131.2	7.7	130.8	7.2	100.0	100.3%
7	Station 26, Offset -1', 6" Depth	133.9	7.9	130.8	7.2	100.0	102.4%
8	Station 26, Offset -1', 4" Depth	133.7	8.5	130.8	7.2	100.0	102.2%
9	Station 14.5, Offset -2', 8" Depth	129.5	6.3	130.8	7.2	100.0	99.0%
10	Station 14.5, Offset -2', 6" Depth	131.1	6.0	130.8	7.2	100.0	100.2%

Loose Lift Thickness (in.): -

Fill Placement: ☐ Controlled ☑ Uncontrolled

Continued on following page . . .

CRAIG TESTING LABORATORIES, INC.
5439 Harding Highway • P.O. Box 427 • Mays Landing, NJ 08330-0427 • (609) 625-1700 • FAX (609) 625-1798

CLIENT: General Dynamics Information Technology

PROJECT NO.: 811092-3

PROJECT: Reflective Cracking Outdoor Phase I, Building 296 Outdoors, William J. Hughes Technical Center

REPORT NO.: FD-17

INSPECTED BY: Reflective Cracking Project Atlan

DATE INSPECTED: July 13, 2018

GEOTECHNICAL REPORT BY: N/A

DATED: N/A

EARTHWORK FIELD INSPECTION REPORT

Item Inspected: ☐ Building Pad ☐ Slab ☐ Foundation ☐ Other:
☐ Utility Trench ☐ Sub-Grade ☑ Pavement Sub-Base Compactor Model: PS-300C

	Location	Dry Density (pcf)	Percent Moisture	Proctor (pcf) ASTM D1557	Optimum Moisture (%)	Compaction Required (%)	Percent Compaction
11	Station 14.5, Offset -2', 4" Depth	134.7	5.8	130.8	7.2	100.0	103.0%
12	Station 8, Offset 1', 8" Depth	130.4	7.0	130.8	7.2	100.0	99.7%
13	Station 8, Offset 1', 6" Depth	130.0	7.0	130.8	7.2	100.0	99.4%
14	Station 8, Offset 1', 4" Depth	134.0	6.7	130.8	7.2	100.0	102.4%
15							
16							
17							
18							
19							
20							

Gauge Serial No.: 24540 Gauge Standard Counts: MS: 599 DS: 1865

Fill Placement: ☐ Controlled ☑ Uncontrolled **Loose Lift Thickness (in.):** -

Hours on Site: 7:00 AM-4:00 PM

Inspection Findings

Report for Informational Purposes Only

Remarks:

All of these tests were taken at 3 PM. Client representative present during testing and aware of test results below requirements.

Reported to:
Project Distribution

Reviewed By: Ed Freire

REV 4/17

Field Notes of Craig Testing Nuclear Density Gauge Results ASTM D6938					
TO 015 Reflective Cracking Outdoor Phase 1 P-154MR Subbase					
Performed by Craig Testing Laboratories @ 8" depth					
Final Testing results to be provided 7/16/2018					
Notes compiled by Matt Aromando 7/13/2018 - 8 AM					
Station Range in Relation to Slab Joints	Offset	Station	Dry Density (lbs/ft^3)	Percent of Maximum Dry Density %	Moisture %
Random Locations for Density and Moisture prior to Compaction	0.00	0+34	122.8	93.9%	12.2
	0.00	0+46	126.2	96.5%	9.7
	-2.50	0+75	125.7	96.1%	9.9
	1.00	0+87	128.8	98.5%	9.6
	7.50	0+91	N/A		9.9
	-2.50	1+20	127.4	97.4%	10.5
	-1.50	1+22	126.8	96.9%	11.9
	0.00	1+42	126.5	96.7%	10.9
		Average:	126.3	96.6%	10.6

Field Notes of Craig Testing Nuclear Density Gauge Results ASTM D6938					
TO 015 Reflective Cracking Outdoor Phase 1 P-154MR Subbase					
Performed by Craig Testing Laboratories @ 8" depth					
Final Testing results to be provided 7/16/2018					
Notes compiled by Matt Aromando 7/13/2018 - 11 AM					
Station Range in Relation to Slab Joints	Offset	Station	Dry Density (lbs/ft^3)	Percent of Maximum Dry Density %	Moisture %
Random Locations for Density and Moisture prior to Compaction	-3.5	0+15	129.2	98.8%	9.4
	4.0	0+32	127.7	97.6%	10.0
	-1.5	0+52.5	130.5	99.8%	9.8
	3.0	0+75	132.5	101.3%	8.4
	-1.5	0+87	128.8	98.5%	9.9
	4.0	1+13	130.2	99.5%	9.8
	0.0	1+33	131.0	100.2%	9.1
	4.0	1+46	124.2	95.0%	7.5
		Average:	129.3	98.8%	9.2

Field Notes of Craig Testing Nuclear Density Gage Results ASTM D6938				
TO 015 Reflective Cracking Outdoor Phase 1 P-154MR Subgrade				
Performed by Craig Testing Laboratories				
Final Testing results to be provided 07/16/2018				
Notes compiled by Tirupan Mandal 07/13/2018				
Nuclear Density Gauge Depth: 4 in				
Station Range in Relation to Slab Joints	Offset	Station	Percent of Maximum Dry Density %	Moisture %
0+02.5 to 0+12.5	8.00	1	102.5	6.7
0+12.5 to 0+22.5	14.50	-2	103.0	5.8
0+22.5 to 0+32.5	26.00	-1	102.2	8.5
0+32.5 to 0+42.5	37.50	0	102.4	8.1
0+42.5 to 0+52.5	48.00	2.5	103.5	7.6
0+52.5 to 0+62.5	55.00	-1.5	102.4	7.9
0+62.5 to 0+72.5	67.50	1	100.9	8.9
0+72.5 to 0+82.5	75.50	2	104.3	6.5
0+82.5 to 0+92.5	87.50	0	102.3	7.6
0+92.5 to 1+02.5	96.00	-1.5	100.0	9.7
1+02.5 to 1+12.5	106.00	-2	101.0	8.6
1+12.5 to 1+22.5	117.50	1.5	101.8	8.1
1+22.5 to 1+32.5	124.50	0	101.9	8.3
1+32.5 to 1+42.5	133.00	-1	101.1	8.5
1+32.5 to 1+42.5	**137.00**	**0.5**	101.4	8.4
1+42.5 to 1+52.5	145.50	2.5	N/A	N/A
1+42.5 to 1+52.5	**145.5**	**-1**	100.4	8.6
		Average:	101.9	8.0

**Values in bold are before rolling 4 passes*

Field Notes of Craig Testing Nuclear Density Gage Results ASTM D6938				
TO 015 Reflective Cracking Outdoor Phase 1 P-154MR Subgrade				
Performed by Craig Testing Laboratories				
Final Testing results to be provided 07/16/2018				
Notes compiled by Tirupan Mandal 07/13/2018				
Nuclear Density Gauge Depth: 6 in				
Station Range in Relation to Slab Joints	Offset	Station	Percent of Maximum Dry Density %	Moisture %
0+02.5 to 0+12.5	8.00	1	99.5	7.0
0+12.5 to 0+22.5	14.50	-2	100.2	6.0
0+22.5 to 0+32.5	26.00	-1	102.4	7.9
0+32.5 to 0+42.5	37.50	0	102.4	8.1
0+42.5 to 0+52.5	48.00	2.5	102.1	8.0
0+52.5 to 0+62.5	55.00	-1.5	101.8	8.0
0+62.5 to 0+72.5	67.50	1	101.1	8.8
0+72.5 to 0+82.5	75.50	2	102.0	7.0
0+82.5 to 0+92.5	87.50	0	101.5	7.3
0+92.5 to 1+02.5	96.00	-1.5	99.5	9.7
1+02.5 to 1+12.5	106.00	-2	100.2	8.5
1+12.5 to 1+22.5	117.50	1.5	101.6	8.2
1+22.5 to 1+32.5	124.50	0	101.6	8.1
1+32.5 to 1+42.5	133.00	-1	100.4	9.0
1+32.5 to 1+42.5	**137.00**	**0.5**	101.2	8.9
1+42.5 to 1+52.5	145.50	2.5	97.6	8.2
1+42.5 to 1+52.5	**145.5**	**-1**	100.4	8.5
		Average:	100.9	8.1

**Values in bold are before rolling 4 passes*

Field Notes of Craig Testing Nuclear Density Gage Results ASTM D6938				
TO 015 Reflective Cracking Outdoor Phase 1 P-154MR Subgrade				
Performed by Craig Testing Laboratories				
Final Testing results to be provided 07/16/2018				
Notes compiled by Tirupan Mandal 07/13/2018				
Nuclear Density Gauge Depth: 8 in				
Station Range in Relation to Slab Joints	Offset	Station	Percent of Maximum Dry Density %	Moisture %
0+02.5 to 0+12.5	8.00	1	99.7	7.0
0+12.5 to 0+22.5	14.50	-2	99.0	6.3
0+22.5 to 0+32.5	26.00	-1	100.3	7.7
0+32.5 to 0+42.5	37.50	0	102.0	8.4
0+42.5 to 0+52.5	48.00	2.5	101.8	7.7
0+52.5 to 0+62.5	55.00	-1.5	100.8	7.9
0+62.5 to 0+72.5	67.50	1	100.5	8.8
0+72.5 to 0+82.5	75.50	2	102.0	6.9
0+82.5 to 0+92.5	87.50	0	101.3	7.7
0+92.5 to 1+02.5	96.00	-1.5	98.4	9.6
1+02.5 to 1+12.5	106.00	-2	99.1	8.6
1+12.5 to 1+22.5	117.50	1.5	100.2	8.4
1+22.5 to 1+32.5	124.50	0	100.7	8.4
1+32.5 to 1+42.5	133.00	-1	99.0	8.9
1+32.5 to 1+42.5	**137.00**	**0.5**	99.9	8.8
1+42.5 to 1+52.5	145.50	2.5	95.9	8.5
1+42.5 to 1+52.5	**145.5**	**-1**	99.0	8.7
		Average:	100.0	8.1

**Values in bold are before rolling 4 passes*

U.S. Department of Transportation **Federal Aviation Administration**	**Construction Progress and Inspection Report** **NAPMRC**		*Inspection Date* 07/16/2018 *Project Name* Reflective Cracking Outdoor Phase I
Contractor & # of Personnel GDIT - 6	*Contractor & # of Personnel* Gemini - 1	*Contractor & # of Personnel* JBT Building Co. - 2	*Contractor & # of Personnel*

Equipment On-Site

- Dynapac (Roller)
- CAT PS300C (Rubber Tire Roller)

Start Time – 7:45 PM *Stop Time –* 4:30 PM	*Temperature* Min – 85 F Max – 94 F	*Humidity* Min – 49 % Max – 69 %	*Conditions* Fair, Cloudy

Site Activities

JBT Construction Co. personnel arrived onsite at 7:45 and compacted the site for (2) passes with the CAT PS-300C. GDIT personnel took (2) samples to be tested for moisture content in the speedy dry reader. Results from the test yielded values of 8.0% and 10.1%. JBT Construction Co. personnel compacted the site for an additional (2) passes with Dynapac roller. The area was left to dry throughout the day. GDIT covered the East side of site at 1:30 PM and then covered the full site at 4 PM.

Materials Delivered

None

Materials Removed

None

Laboratory and Field Testing Performed

Moisture Testing

Meetings/Discussions

None

Safety Concerns

None

Problem Areas/Additional Comments

The project area still has spots that are wet and soft, area left open to dry all day.

INSPECTOR OR REPRESENTATIVE

Date	*Typed or Printed Name and Title*	*Signature*
7·16·18	JOE GAWRYSIAK	

U.S. Department of Transportation **Federal Aviation Administration**	**Construction Progress and Inspection Report** **NAPMRC**		*Inspection Date* 07/17/2018 *Project Name* Reflective Cracking Outdoor Phase I
Contractor & # of Personnel GDIT - 7	*Contractor & # of Personnel* Gemini - 2	*Contractor & # of Personnel* JBT Building Co. – 2	*Contractor & # of Personnel* Craig Testing – 1 RDM International - 1

Equipment On-Site

- Dynapac (Roller)
- CAT PS300C (Rubber Tire Roller)
- John Deere 310SG (Backhoe)
- MQ Mikasa MTX70HD (Hand Tamp)
- Pentax AL-320 (Level)
- Instrotek 3440 (Nuclear Moisture-Density)

Start Time – 8:00 AM *Stop Time –* 4:30 PM	*Temperature* Min – 83 F Max – 94 F	*Humidity* Min – 51 % Max – 79 %	*Conditions* Fair, Partly Cloudy

Site Activities

Craig Testing arrived at 8:15 AM and obtained Nuclear Moisture-Density readings at depths of 4, 6, and 8 inches at the previous failing locations from Friday 7/13/18 and 8 inches at locations that previously passed to confirm. JBT Construction Co. personnel dug out a trench at Sta. 0+89 to help drain the site and reduce pumping in the area. The trench reached 22 inches below the P-154 surface and was approximately 2.5 feet wide. A section of P-154 from Sta. 0+86 to Sta. 0+92, offset -0.5' to -3.5' was removed by a John Deere 310 SG Backhoe by JBT Construction Co. personnel due to pumping issues. The area was excavated down to the subgrade to determine if it was holding water which it did not show signs of. Craig Testing took a Nuclear Moisture-Density reading on the subgrade level at St. 0+89 yielding a 13.9% moisture and 93.4% dry density. P-154 material was spread out to facilitate drying before it was placed in the hole. Once the material was dried to optimum moisture, the P-154 was placed in the hole then compacted for (5) passes (back and forth equal to 1 pass) using the CAT PS300C. GDIT personnel surveyed the elevation of apparent low spots after compaction and determined that results were below the proposed grade. The top layer of the hole was scarified and additional material was added to bring up the elevation. The material was then compacted for (5) passes with the Dynapac and an additional (5) passes with the CAT PS300C. Craig Testing performed Nuclear Moisture-Density test on the newly filled hole and compaction came up below specification. RDM personnel used a MQ Mikasa MTX70 Hand Tamper to compact the fill area. Craig Testing took another Nuclear Moisture-Density reading and this resulted in a value passing specification at 101.3% compaction and a moisture of 7.6%. GDIT then shot elevations using the Pentax AL-320 Level to confirm the repaired surface was above grade. GDIT personnel covered the site and patched holes in tarp at end of day due to expected heavy thunderstorms.

Materials Delivered

None

Materials Removed

P-154

Laboratory and Field Testing Performed

Moisture Testing, Nuclear Density-Moisture

Meetings/Discussions

None

Safety Concerns

None

Problem Areas/Additional Comments		
Pumping section from Sta. 0+86 to Sta. 0+92, offset -0.5 to -3.5 was removed down to the subgrade material to identify if the subgrade was holding water. Nuclear test results produced values of 13.9% moisture content and a dry density of 93.4% on the subgrade. The area was replaced with new P-154 material and compacted to the required density (101.3% and 7.6% moisture).		
INSPECTOR OR REPRESENTATIVE		
Date	*Typed or Printed Name and Title*	*Signature*
7/17/18	JOE GAWRYSIAK	

Field Notes of Craig Testing Nuclear Density Gage Results ASTM D6938				
TO 015 Reflective Cracking Outdoor Phase 1 P-154MR Subgrade				
Performed by Craig Testing Laboratories				
Final Testing results to be provided 07/18/2018				
Notes compiled by Tirupan Mandal 07/17/2018				
Nuclear Density Gauge Depth: 8 in				
Station Range in Relation to Slab Joints	Offset	Station	Percent of Maximum Dry Density %	Moisture %
0+02.5 to 0+12.5	3.00	10	103.5	7.3
0+12.5 to 0+22.5	2.50	15.5	100.3	7.8
0+22.5 to 0+32.5	-1.00	28.5	100.7	7.8
0+32.5 to 0+42.5	0.00	36.5	101.7	8.3
0+42.5 to 0+52.5	2.00	47.5	103.1	7.2
0+52.5 to 0+62.5	-2.00	60.5	102.7	6.7
0+62.5 to 0+72.5	1.00	69.5	101.6	6.8
0+72.5 to 0+82.5	0.00	76	103.6	6.7
0+82.5 to 0+92.5	-2.00	89	101.9	8.5
0+92.5 to 1+02.5	-3.00	96.5	103.2	7.1
1+02.5 to 1+12.5	3.00	107.5	101.1	7.6
1+12.5 to 1+22.5	2.00	118	102.6	7.5
1+22.5 to 1+32.5	-1.00	127.5	100.6	7.7
1+32.5 to 1+42.5	0.00	136	101.9	7.2
1+42.5 to 1+52.5	0.5	150	100.8	7.3
		Average:	102.0	7.4

Field Notes of Craig Testing Nuclear Density Gage Results ASTM D6938				
TO 015 Reflective Cracking Outdoor Phase 1 P-154MR Subgrade				
Performed by Craig Testing Laboratories				
Final Testing results to be provided 07/18/2018				
Notes compiled by Tirupan Mandal 07/17/2018				
Nuclear Density Gauge Depth: 6 in				
Station Range in Relation to Slab Joints	Offset	Station	Percent of Maximum Dry Density %	Moisture %
0+02.5 to 0+12.5	3.00	10	104.0	7.4
0+12.5 to 0+22.5	2.50	15.5	103.1	7.2
0+22.5 to 0+32.5	-1.00	28.5		
0+32.5 to 0+42.5	0.00	36.5		
0+42.5 to 0+52.5	2.00	47.5		
0+52.5 to 0+62.5	-2.00	60.5		
0+62.5 to 0+72.5	1.00	69.5		
0+72.5 to 0+82.5	0.00	76		
0+82.5 to 0+92.5	-2.00	89	103.0	8.4
0+92.5 to 1+02.5	-3.00	96.5	104.4	7.2
1+02.5 to 1+12.5	3.00	107.5		
1+12.5 to 1+22.5	2.00	118		
1+22.5 to 1+32.5	-1.00	127.5		
1+32.5 to 1+42.5	0.00	136	104.5	7.0
1+42.5 to 1+52.5	0.5	150	102.4	7.1
		Average:	103.6	7.4

Field Notes of Craig Testing Nuclear Density Gage Results ASTM D6938				
TO 015 Reflective Cracking Outdoor Phase 1 P-154MR Subgrade				
Performed by Craig Testing Laboratories				
Final Testing results to be provided 07/18/2018				
Notes compiled by Tirupan Mandal 07/17/2018				
Nuclear Density Gauge Depth: 4 in				
Station Range in Relation to Slab Joints	Offset	Station	Percent of Maximum Dry Density %	Moisture %
0+02.5 to 0+12.5	3.00	10	104.3	7.5
0+12.5 to 0+22.5	2.50	15.5	105.0	6.7
0+22.5 to 0+32.5	-1.00	28.5		
0+32.5 to 0+42.5	0.00	36.5		
0+42.5 to 0+52.5	2.00	47.5		
0+52.5 to 0+62.5	-2.00	60.5		
0+62.5 to 0+72.5	1.00	69.5		
0+72.5 to 0+82.5	0.00	76		
0+82.5 to 0+92.5	-2.00	89	101.8	8.9
0+92.5 to 1+02.5	-3.00	96.5	104.6	7.2
1+02.5 to 1+12.5	3.00	107.5		
1+12.5 to 1+22.5	2.00	118		
1+22.5 to 1+32.5	-1.00	127.5		
1+32.5 to 1+42.5	0.00	136	104.3	6.9
1+42.5 to 1+52.5	0.5	150	104.7	6.6
		Average:	104.1	7.3

U.S. Department of Transportation **Federal Aviation Administration**	**Construction Progress and Inspection Report** **NAPMRC**		*Inspection Date* 07/18/2018 *Project Name* Reflective Cracking Outdoor Phase I
Contractor & # of Personnel GDIT - 4	*Contractor & # of Personnel* Gemini - 2	*Contractor & # of Personnel* RDM International - 1	*Contractor & # of Personnel*

Equipment On-Site

- Pentax AL-320 (Level)
- Little Giant 505025 5-MSP Submersible Utility Pump (Sump Pump)
- ToolCat

Start Time – 6:00 AM *Stop Time –* 4:30 PM	*Temperature* Min – 71 F Max – 81 F	*Humidity* Min – 58 % Max – 90 %	*Conditions* Fair

Site Activities

GDIT personnel used a sump pump for 15 minutes at the North end of the site to remove water from the top of the tarp. The tarp was then removed at 6:45 AM once all standing water was extracted. GDIT personnel took elevation readings using the Pentax Al-320 Level at 10-foot increments to determine grade conformance with all elevations being above grade. The area was deemed to be too moist to work on so it was left uncovered all day to allow the P-154 to dry. GDIT personnel dug a trench at the Northwest corner of site to help drain the low point and prevent future ponding during construction. The trench was approximately 25' long x 12" wide x 12" avg depth. (3) Check dams were added to the trench to help with the collection of silt/debris. GDIT personnel covered site at end of day.

Materials Delivered

None

Materials Removed

Laboratory and Field Testing Performed

Meetings/Discussions

None

Safety Concerns

None

Problem Areas/Additional Comments

Due to excessive rain/thunderstorms from previous evening, site was too wet to perform any testing or grading. Approximately 0.94 inches of rain fell overnight after the site was covered yesterday.

INSPECTOR OR REPRESENTATIVE

Date	*Typed or Printed Name and Title*	*Signature*
7/18/18	JOE GAWRYSIAK	

U.S. Department of Transportation
Federal Aviation Administration

Construction Progress and Inspection Report

NAPMRC

Inspection Date
07/19/2018

Project Name
Reflective Cracking Outdoor Phase I

Contractor & # of Personnel	*Contractor & # of Personnel*	*Contractor & # of Personnel*	*Contractor & # of Personnel*
GDIT - 5	Gemini - 2	RDM International - 1	JBT Construction Co. - 2

Equipment On-Site

- Pentax AL-320 (Level)
- Lee G440 (Power Grader)
- RL-SV2S (Laser Level)
- John Deere 310SG (Backhoe)

Start Time – 6:15 AM *Stop Time –* 4:30 PM	*Temperature* Min – 74 F Max – 82 F	*Humidity* Min – 45 % Max – 58 %	*Conditions* Fair

Site Activities

GDIT personnel uncovered the site at 6:15 AM. JBT Construction Co. personnel arrived onsite at 7 AM and set up their dual slope laser level. JBT used their Lee G440 along with the RL-SV2S system to grade the site starting at 8AM. Numerous passes were made throughout the day to remove up to 1/8" of material with each pass. GDIT personnel back checked the site throughout this process using Pentax AL-320 Level to make sure elevations were above grade and within tolerance. GDIT provided feedback of areas that required additional attention that were still out of tolerance. JBT finished grading at 4:20 PM and used the John Deere Backhoe to remove the excess P-154 generated. This material was stockpiled in the parking lot with the other trimmed P-154.

Materials Delivered

None

Materials Removed

P-154

Laboratory and Field Testing Performed

Meetings/Discussions

None

Safety Concerns

None

Problem Areas/Additional Comments

Small portion of site still slightly above elevation tolerance (Sta. 0+40 to 0+90, West side)

INSPECTOR OR REPRESENTATIVE

Date	*Typed or Printed Name and Title*	*Signature*
7/19/18	JOE GAWRYSIAK	

U.S. Department of Transportation **Federal Aviation Administration**	**Construction Progress and Inspection Report** **NAPMRC**		*Inspection Date* 07/24/2018 *Project Name* Reflective Cracking Outdoor Phase I
Contractor & # of Personnel GDIT - 8	*Contractor & # of Personnel* Gemini - 2	*Contractor & # of Personnel* Rodriguez Consulting - 1	*Contractor & # of Personnel*
Equipment On-Site • Leica 3D Scanner			
Start Time – 7:00 AM *Stop Time –* 4:30 PM	*Temperature* Min – 80 F Max – 86 F	*Humidity* Min – 70 % Max – 87 %	*Conditions* Partly Cloudy

Site Activities

GDIT personnel partially uncovered the site at 7 AM and fully uncovered it at 8:15 AM. GDIT personnel set up the Leica 3D Scanner equipment at 10:20 AM to perform another scan of the P-154 surface. The original scan did not show the west side due to excess material being stored in the shoulder area. Rodriguez Consulting performed the Leica 3D Scan starting at 11:40 AM and finished at 12:40 PM. GDIT personnel then performed DCP and LWD tests from 1:45 to 4:00 PM at Stations 0+7.5, 0+17.5, 0+27.5, 0+37.5, 0+47.5, 0+57.5, 0+97.5, 1+17.5, 1+27.5, 1+37.5, and 1+47.5. GDIT took moisture samples from (4) locations and covered the site at the end of the day.

Materials Delivered

None

Materials Removed

Laboratory and Field Testing Performed

Leica 3D Scan, DCP, LWD, Moisture Tests

Meetings/Discussions

None

Safety Concerns

None

Problem Areas/Additional Comments

INSPECTOR OR REPRESENTATIVE

Date	*Typed or Printed Name and Title*	*Signature*
7/24/18	JOE GAWRYSIAK	

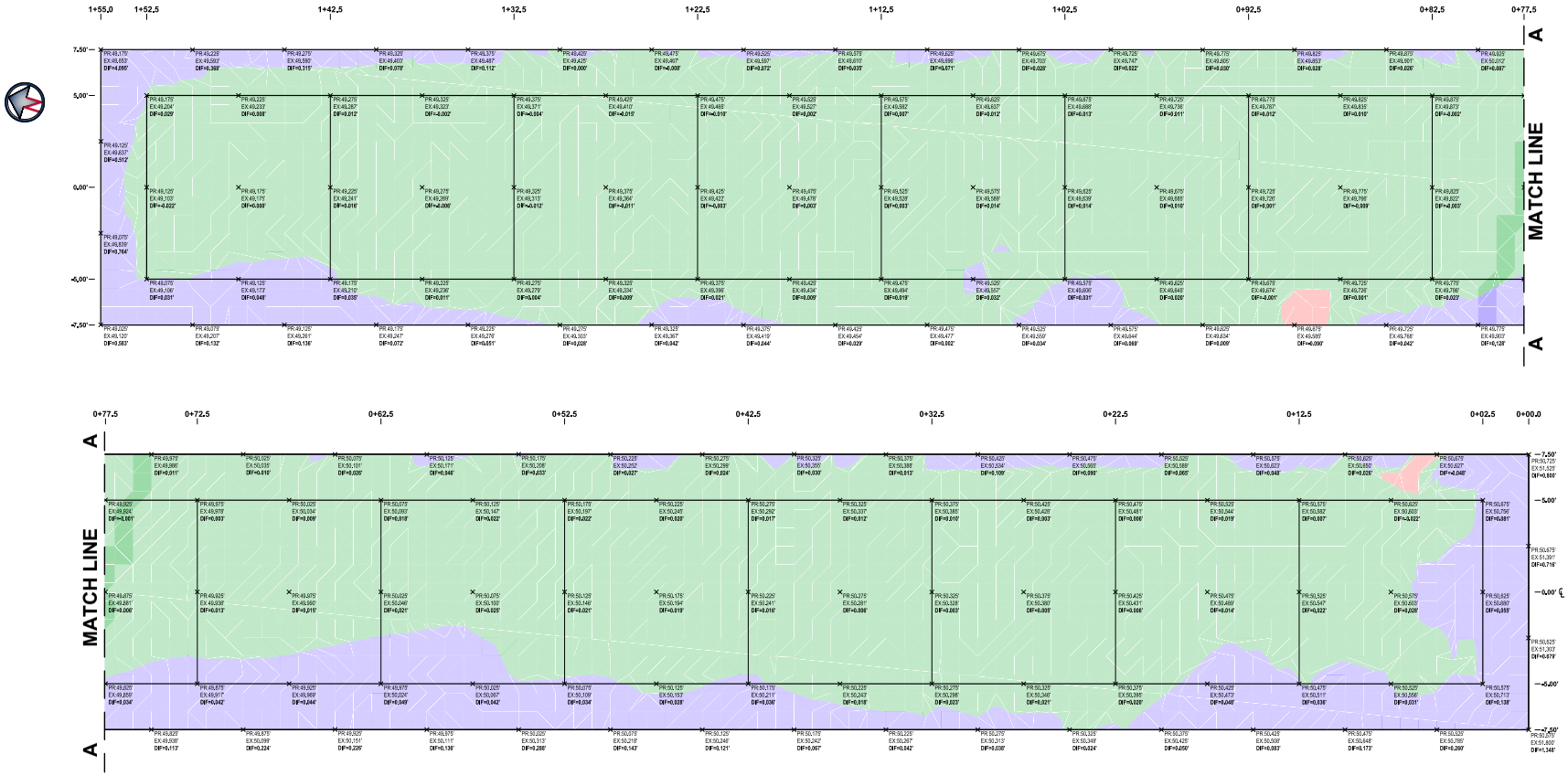

PLAN VIEW

SCALE: 1"=3'

CUT (+) AND FILL (-) SUMMARY TABLE				
ID	COLOR	MIN. [FT]	MAX. [FT]	AREA [SQ. FT]
1		-0.244	-0.031	8.00
2		-0.031	0.031	1879.11
3		0.031	1.495	437.86

LEGEND:

x - SPOT ELEVATION

PR - PROPOSED ELEVATION

EX - EXISTING ELEVATION

DIF - DIFFERENCE IN ELEVATION

GRADE TOLERANCE: ± 0.031' (3/8")

CONFORMING ELEVATION

ELEVATION BELOW THE CONFORMANCE RANGE

ELEVATION ABOVE THE CONFORMANCE RANGE

3' 2' 1' 0 3' 6' 9'

GRAPHIC SCALE

1" = 3'

NO.	REVISIONS	DATE	BY	CHK	APR

RODRIGUEZ CONSULTING, LLC
1301 N 2ND STREET
PHILADELPHIA, PA 19122
PHONE: (215) 839-8087

GENERAL DYNAMICS
Information Technology
200 DECADON DRIVE
EGG HARBOR TOWNSHIP
NEW JERSEY 08234
PHONE: (609) 677-8543

FOR

NATIONAL AIRPORT PAVEMENT TEST FACILITY
ATLANTIC CITY AIRPORT
NEW JERSEY 08234

	NAME	DATE
DRAWN	M. MAZUREK	07/25/2018
CHECKED	H.Y. / J.G.	
FAA APPROVAL DATE:		
PROJECT NO:		

REFLECTIVE CRACKING OUTDOOR

PHASE I

P-154 ELEVATION MAP

SIZE: ANSI D | SCALE: 1"=3' | SHEET 1 OF 1

CAD FILE: REFL-CRACK-OUT1-CONF.DWG

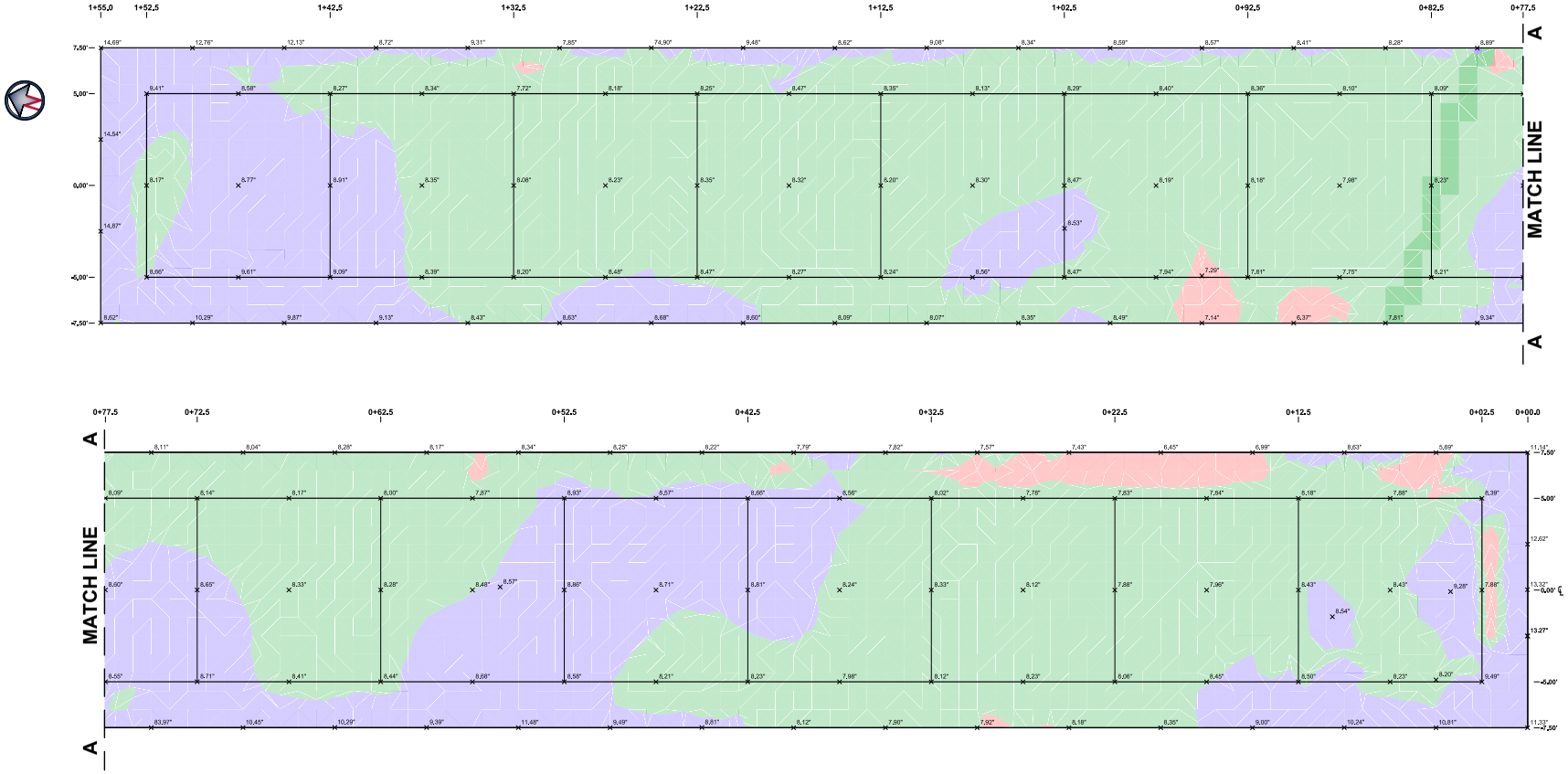

PLAN VIEW

SCALE: 1"=3'

THICKNESS MAP LEGEND				
ID	MIN. THICKNESS [FT]	MAX. ELEVATION [FT]	AREA [SQ. FT]	COLOR
1	0.388'	0.625'	59.75	
2	0.625'	0.708'	1559.22	
3	0.708'	1.828'	705.97	

LEGEND:

x - THICKNESS LABEL

TARGET THICKNESS: 8"±½" (0.667±0.042')

THICKNESS TOLERANCE: ± 0.042' (½")

CONFORMING THICKNESS

THICKNESS BELOW THE CONFORMANCE RANGE

THICKNESS ABOVE THE CONFORMANCE RANGE

NO.	REVISIONS	DATE	BY	CHK	APR

RODRIGUEZ CONSULTING, LLC
1301 N 2ND STREET
PHILADELPHIA, PA 19122
PHONE: (215) 839-8087

GENERAL DYNAMICS
Information Technology
200 DECADON DRIVE
EGG HARBOR TOWNSHIP
NEW JERSEY 08234
PHONE: (609) 677-8543

FOR

NATIONAL AIRPORT PAVEMENT TEST FACILITY
ATLANTIC CITY AIRPORT
NEW JERSEY 08234

	NAME	DATE
DRAWN	M. MAZUREK	07/25/2018
CHECKED	H.Y. / J.G.	
FAA APPROVAL DATE:		
PROJECT NO:		

REFLECTIVE CRACKING OUTDOOR
PHASE I
P-154 THICKNESS MAP

SIZE: ANSI D | SCALE: 1"=3' | SHEET 1 OF 1

CAD FILE: REFL-CRACK-OUT1-CONF.DWG

U.S. Department of Transportation **Federal Aviation Administration**	**Construction Progress and Inspection Report** **NAPMRC**		*Inspection Date* 07/25/2018 *Project Name* Reflective Cracking Outdoor Phase I
Contractor & # of Personnel GDIT - 2	*Contractor & # of Personnel*	*Contractor & # of Personnel*	*Contractor & # of Personnel*
Equipment On-Site • Little Giant 505025 5-MSP Submersible Utility Pump (Sump Pump)			
Start Time – 6:30 AM *Stop Time –* 4:30 PM	*Temperature* Min – 75 F Max – 81 F	*Humidity* Min – 81 % Max – 97 %	*Conditions* Cloudy
Site Activities GDIT personnel pumped out Northwest corner of site at 6:30 AM for 15 minutes. No other worked performed.			
Materials Delivered None			
Materials Removed			
Laboratory and Field Testing Performed			
Meetings/Discussions None			
Safety Concerns None			
Problem Areas/Additional Comments D-PSPA testing planned to be performed, but site was too wet from early morning rainfall of 0.64 inches.			
INSPECTOR OR REPRESENTATIVE			
Date 7/25/18	*Typed or Printed Name and Title* JOE GAWRYSIAK	*Signature*	

U.S. Department of Transportation
Federal Aviation Administration

Construction Progress and Inspection Report

NAPMRC

Inspection Date
07/26/2018

Project Name
Reflective Cracking Outdoor Phase I

Contractor & # of Personnel	*Contractor & # of Personnel*	*Contractor & # of Personnel*	*Contractor & # of Personnel*
GDIT - 8	Gemini - 3		

Equipment On-Site
- D-PSPA
- DCP

Start Time – 8:00 AM *Stop Time –* 2:00 PM	*Temperature* Min – 76 F Max – 87 F	*Humidity* Min – 59 % Max – 94 %	*Conditions* Partly Cloudy

Site Activities
GDIT personnel uncovered site at 8:15 AM and proceeded to perform DCP and D-PSPA tests at 8:45 AM on the centerline at Stations 0+6.5, 0+16.5, 0+26.5, 0+36.5, 0+46.5, 0+56.5, 0+96.5, 1+06.5, 1+116.5, 1+126.5, 1+36.5, and 1+46.5. Moisture samples were taken at 10:30 AM at Sta. 0+23, 0+55, 0+93, and 1+30. GDIT personnel backfilled holes from DCP tests and covered site at 2:00 PM.

Materials Delivered
None

Materials Removed

Laboratory and Field Testing Performed
DCP, D-PSPA

Meetings/Discussions
None

Safety Concerns
None

Problem Areas/Additional Comments
None

INSPECTOR OR REPRESENTATIVE

Date	*Typed or Printed Name and Title*	*Signature*
7/26/18	JOE GAWRYSIAK	

U.S. Department of Transportation
Federal Aviation Administration

Construction Progress and Inspection Report

NAPMRC

Inspection Date
07/27/2018

Project Name
Reflective Cracking Outdoor Phase I

Contractor & # of Personnel	*Contractor & # of Personnel*	*Contractor & # of Personnel*	*Contractor & # of Personnel*
GDIT - 3			

Equipment On-Site
- Little Giant Submersible Pump

Start Time – 7:00 AM *Stop Time –* 12:30 PM	*Temperature* Min – 75 F Max – 87 F	*Humidity* Min – 63 % Max – 100 %	*Conditions* Fair to Mostly Cloudy, Brief Thunderstorm around noon

Site Activities
GDIT personnel uncovered site and rearranged tarps to provide better protection. The larger tarp being used to cover the excess material on the west side was moved to cover the lower portion of the test section. Due to extra width, the tarp was spread up and over the concrete curb to the east. The tarp that previously was being used on the bottom half of the test section was moved over to the side to cover the excess material. Overlaps were used to prevent water from working its way under the tarp during ponding. A brief thunderstorm popped up at 11:45 and excess water was pumped off the tarp at the northwest corner. The tarp was secured down using long 2"x4"s with a sand bag on each end.

Materials Delivered
None

Materials Removed

Laboratory and Field Testing Performed
None

Meetings/Discussions
None

Safety Concerns
None

Problem Areas/Additional Comments
None

INSPECTOR OR REPRESENTATIVE

Date	*Typed or Printed Name and Title*	*Signature*
7/27/18	JOE GAWRYSIAK	

U.S. Department of Transportation
Federal Aviation Administration

Construction Progress and Inspection Report

NAPMRC

Inspection Date
07/31/2018

Project Name
Reflective Cracking Outdoor Phase I

Contractor & # of Personnel	*Contractor & # of Personnel*	*Contractor & # of Personnel*	*Contractor & # of Personnel*

Equipment On-Site
None

Start Time – No Work *Stop Time* – No Work	*Temperature* Min – 69.0 F Max – 80.0 F	*Humidity* Min – 76 % Max – 97 %	*Conditions* Cloudy with Light Rain Total Accumulation = 0.04"

Site Activities
No activity for the day

Materials Delivered
None

Materials Removed
None

Laboratory and Field Testing Performed
None

Meetings/Discussions
None

Safety Concerns
None

Problem Areas/Additional Comments
None

INSPECTOR OR REPRESENTATIVE

Date	*Typed or Printed Name and Title*	*Signature*
7/31/18	JOE GAWRYSIAK	

U.S. Department of Transportation **Federal Aviation Administration**	**Construction Progress and Inspection Report** **NAPMRC**		*Inspection Date* 08/02/2018 *Project Name* Reflective Cracking Outdoor Phase I
Contractor & # of Personnel	*Contractor & # of Personnel*	*Contractor & # of Personnel*	*Contractor & # of Personnel*
Equipment On-Site None			
Start Time – No Work *Stop Time* – No Work	*Temperature* Min – 79.0 F Max – 88.0 F	*Humidity* Min – 63 % Max – 90 %	*Conditions* Mostly Cloudy w/ Light Rain Total Accumulation = 0.04"
Site Activities No activity for the day			
Materials Delivered None			
Materials Removed None			
Laboratory and Field Testing Performed None			
Meetings/Discussions None			
Safety Concerns None			
Problem Areas/Additional Comments None			
INSPECTOR OR REPRESENTATIVE			
Date 8/2/18	*Typed or Printed Name and Title* JOE GAWRYSIAK	*Signature*	

U.S. Department of Transportation **Federal Aviation Administration**	**Construction Progress and Inspection Report** **NAPMRC**		*Inspection Date* 08/03/2018 *Project Name* Reflective Cracking Outdoor Phase I
Contractor & # of Personnel	*Contractor & # of Personnel*	*Contractor & # of Personnel*	*Contractor & # of Personnel*
Equipment On-Site None			
Start Time – No Work *Stop Time* – No Work	*Temperature* Min – 76.0 F Max – 88.0 F	*Humidity* Min – 59 % Max – 94 %	*Conditions* Fair to Partly Cloudy
Site Activities No activity for the day			
Materials Delivered None			
Materials Removed None			
Laboratory and Field Testing Performed None			
Meetings/Discussions None			
Safety Concerns None			
Problem Areas/Additional Comments None			
INSPECTOR OR REPRESENTATIVE			
Date 8/3/18	*Typed or Printed Name and Title* JOE GAWRYSIAK	*Signature*	

U.S. Department of Transportation **Federal Aviation Administration**	**Construction Progress and Inspection Report** **NAPMRC**		*Inspection Date* 08/07/2018 *Project Name* Reflective Cracking Outdoor Phase I
Contractor & # of Personnel	*Contractor & # of Personnel*	*Contractor & # of Personnel*	*Contractor & # of Personnel*
Equipment On-Site None			
Start Time – No Work *Stop Time* – No Work	*Temperature* Min – 75.0 F Max – 88.0 F	*Humidity* Min – 67 % Max – 94 %	*Conditions* Fair
Site Activities No activity for the day			
Materials Delivered None			
Materials Removed None			
Laboratory and Field Testing Performed None			
Meetings/Discussions None			
Safety Concerns None			
Problem Areas/Additional Comments None			
INSPECTOR OR REPRESENTATIVE			
Date 8/7/18	*Typed or Printed Name and Title* JOE GAWRYSIAK	*Signature*	

U.S. Department of Transportation **Federal Aviation Administration**	**Construction Progress and Inspection Report** **NAPMRC**		*Inspection Date* 08/08/2018 *Project Name* Reflective Cracking Outdoor Phase I
Contractor & # of Personnel	*Contractor & # of Personnel*	*Contractor & # of Personnel*	*Contractor & # of Personnel*
Equipment On-Site None			
Start Time – No Work *Stop Time* – No Work	*Temperature* Min – 72.0 F Max – 92.0 F	*Humidity* Min – 54 % Max – 97 %	*Conditions* Fair
Site Activities No activity for the day			
Materials Delivered None			
Materials Removed None			
Laboratory and Field Testing Performed None			
Meetings/Discussions None			
Safety Concerns None			
Problem Areas/Additional Comments None			
INSPECTOR OR REPRESENTATIVE			
Date 8/8/18	*Typed or Printed Name and Title* JOE GAWRYSIAK	*Signature*	

U.S. Department of Transportation
Federal Aviation Administration

Construction Progress and Inspection Report

NAPMRC

Inspection Date
08/09/2018

Project Name
Reflective Cracking Outdoor Phase I

Contractor & # of Personnel	*Contractor & # of Personnel*	*Contractor & # of Personnel*	*Contractor & # of Personnel*

Equipment On-Site
None

Start Time – No Work *Stop Time* – No Work	*Temperature* Min – 74.0 F Max – 91.0 F	*Humidity* Min – 48 % Max – 97 %	*Conditions* Fair

Site Activities
No activity for the day

Materials Delivered
None

Materials Removed
None

Laboratory and Field Testing Performed
None

Meetings/Discussions
None

Safety Concerns
None

Problem Areas/Additional Comments
None

INSPECTOR OR REPRESENTATIVE

Date	*Typed or Printed Name and Title*	*Signature*
8/9/18	JOE GAWRYSIAK	

U.S. Department of Transportation **Federal Aviation Administration**	**Construction Progress and Inspection Report** **NAPMRC**		*Inspection Date* 08/10/2018 *Project Name* Reflective Cracking Outdoor Phase I
Contractor & # of Personnel	*Contractor & # of Personnel*	*Contractor & # of Personnel*	*Contractor & # of Personnel*
Equipment On-Site None			
Start Time – No Work *Stop Time* – No Work	*Temperature* Min – 70.0 F Max – 90.0 F	*Humidity* Min – 42 % Max – 93 %	*Conditions* Fair
Site Activities No activity for the day			
Materials Delivered None			
Materials Removed None			
Laboratory and Field Testing Performed None			
Meetings/Discussions None			
Safety Concerns None			
Problem Areas/Additional Comments None			
INSPECTOR OR REPRESENTATIVE			
Date 8/10/18	*Typed or Printed Name and Title* JOE GAWRYSIAK	*Signature*	

U.S. Department of Transportation **Federal Aviation Administration**	**Construction Progress and Inspection Report** **NAPMRC**		*Inspection Date* 08/31/2018 *Project Name* Reflective Cracking Outdoor Phase I
Contractor & # of Personnel	*Contractor & # of Personnel*	*Contractor & # of Personnel*	*Contractor & # of Personnel*
Equipment On-Site None			
Start Time – No Work *Stop Time* – No Work	*Temperature* Min – 74.0 F Max – 79.0 F	*Humidity* Min – 79 % Max – 100 %	*Conditions* Cloudy w/ Heavy Storms Precipitation = 0.42"
Site Activities None			
Materials Delivered None			
Materials Removed None			
Laboratory and Field Testing Performed None			
Meetings/Discussions None			
Safety Concerns None			
Problem Areas/Additional Comments None			
INSPECTOR OR REPRESENTATIVE			
Date 8/31/18	*Typed or Printed Name and Title* JOE GAWRYSIAK	*Signature*	

U.S. Department of Transportation
Federal Aviation Administration

Construction Progress and Inspection Report

NAPMRC

Inspection Date
09/07/2018

Project Name
Reflective Cracking Outdoor Phase I

Contractor & # of Personnel	*Contractor & # of Personnel*	*Contractor & # of Personnel*	*Contractor & # of Personnel*

Equipment On-Site
None

Start Time – No Work *Stop Time* – No Work	*Temperature* Min – 73.0 F Max – 86.0 F	*Humidity* Min – 72 % Max – 97 %	*Conditions* Mostly Cloudy w/ Light Rain Precipitation = 0.08"

Site Activities
None

Materials Delivered
None

Materials Removed
None

Laboratory and Field Testing Performed
None

Meetings/Discussions
None

Safety Concerns
None

Problem Areas/Additional Comments
None

INSPECTOR OR REPRESENTATIVE

Date	*Typed or Printed Name and Title*	*Signature*
9/7/18	JOE GAWRYSIAK	Joe

U.S. Department of Transportation **Federal Aviation Administration**	**Construction Progress and Inspection Report** **NAPMRC**		Inspection Date 11/14/2018 Project Name TO#15 Ref. Crack. Outdoor-Phase 1
Contractor & # of Personnel AE Stone 1Labor+1Operator	Contractor & # of Personnel Rodriguez 1 surveyor	Contractor & # of Personnel GDIT 4 tech.+1Tech. Lead Craig Testing 1 person	Contractor & # of Personnel Gemini 1 person
Equipment On-Site 1) Mini Excavator 2) LWD testing apparatus 3) D-PSPA testing apparatus 4) Work Station Survey Device 5) Construction Hand Tools			
Start Time – 7:30 AM Stop Time – 4:30 PM	Temperature 44 deg. F. high 32deg. F. Low	Humidity 48%	Conditions Partly Cloudy 12 mph NW wind
Site Activities 1) Digging instrumentation trench to DAQ 2) Installing conduit under the concrete slab section 3) Running LWD and D-PSPA tests 4) Nuclear Field Density Test Machine 5) Covering with plastic tarp and hold it in place with sand/like mat. Bags to protect the site from rain and weather conditions.			
Materials Delivered N/A			
Materials Removed N/A			
Laboratory and Field Testing Performed LWD D-PSPA Nuclear FD			
Meetings/Discussions The GDIT Instrumentation team was discussing how they are going to install the conduits under the concrete Slab 1. Discussed how to maintain the conduits spacing in the trench? – Tie them with a wire to a steel rode installed 1' to 1.5' in ground or use conduit spacers. They elected to use spacers.			
Safety Concerns N/A			

Problem Areas/Additional Comments Due to the compaction and vibration in lanes 1+2 for TO#26, the surveyor was not able to carry on the survey using the work station (vibration throws the machine accuracy off). Due to that he will come tomorrow if not raining or Friday to survey the form work and location and provide offsets to the concrete subcontractor.		
INSPECTOR OR REPRESENTATIVE		
Date 11/14/2018	Typed or Printed Name and Title Khaled Hamad	Signature Khaled Hamad

NATIONAL AIRPORT PAVEMENT
TEST FACILITY
0.10 (1/4")

NATIONAL AIRPORT PAVEMENT
TEST FACILITY

U.S. Department of Transportation **Federal Aviation Administration**	**Construction Progress and Inspection Report** **NAPMRC**		Inspection Date 11/15/2018 Project Name TO#15 Ref. Crack.-Outdoor/Phase 1
Contractor & # of Personnel	Contractor & # of Personnel	Contractor & # of Personnel	Contractor & # of Personnel
Equipment On-Site			
Start Time - Stop Time -	Temperature High 47 deg. F Low 41 deg. F	Humidity 85%	Conditions Rain Precip Acc: 1.639”
Site Activities **No Activities**			
Materials Delivered			
Materials Removed			
Laboratory and Field Testing Performed			
Meetings/Discussions			
Safety Concerns			
Problem Areas/Additional Comments			

INSPECTOR OR REPRESENTATIVE		
Date	Typed or Printed Name and Title Khaled Hamad	Signature Khaled Hamad

U.S. Department of Transportation **Federal Aviation Administration**	**Construction Progress and Inspection Report** **NAPMRC**		Inspection Date 11/16/2018 Project Name TO#15 Ref. Crack.-outdoor-phase 1
Contractor & # of Personnel Rodriguez-Survey-1 Surveyor	Contractor & # of Personnel GDIT- 3Labor+1 Safety	Contractor & # of Personnel	Contractor & # of Personnel
Equipment On-Site -Total Station -Hand tools			
Start Time – 7:30am, Stop Time – 4:30 pm	Temperature High 56 deg. F Low 36 deg F	Humidity 87%	Conditions Cloudy
Site Activities n/A			
Materials Delivered Na			
Materials Removed na			
Laboratory and Field Testing Performed na			
Meetings/Discussions na			
Safety Concerns na			
Problem Areas/Additional Comments Trench was dug 1 ft off center, it was filled back in 2 layers tamped and compacted as per spec. to be dug in the right location next week			

INSPECTOR OR REPRESENTATIVE		
Date	Typed or Printed Name and Title Khaled Hamad-GDIT Construction Engineer	Signature Khaled Hamad

U.S. Department of Transportation **Federal Aviation Administration**	**Construction Progress and Inspection Report** **NAPMRC**		Inspection Date 11/19/2018 Project Name TO#15 Ref. Crack. Outdoor-Phase 1
Contractor & # of Personnel AE Stone 1Labor+1Operator	Contractor & # of Personnel Rodriguez 1 surveyor	Contractor & # of Personnel GDIT 4 tech.+1Tech. Lead Craig Testing 1 person	Contractor & # of Personnel Gemini 1 person
Equipment On-Site 1) Mini Excavator 2) Backhoe 3) Plate Viabrator 4) Work Station Survey Device 5) Construction Hand Tools			
Start Time – 7:30 AM Stop Time – 4:30 PM	Temperature 59 deg. F. high 35deg. F. Low	Humidity 80%	Conditions Partly Cloudy
Site Activities 1) Digging instrumentation trench to DAQ 2) Installing conduit under the concrete slab section, 3) Covering with plastic tarp and hold it in place with sand/like mat. Bags to protect the site from rain and weather conditions.			
Materials Delivered N/A			
Materials Removed N/A			
Laboratory and Field Testing Performed N/A			
Meetings/Discussions Discussed with FAA how we installed the conduits. They requested FD test on the trench; they requested the field density to be between 90%-95%.			
Safety Concerns N/A			
Problem Areas/Additional Comments We have not used brackets to install the conduits but our procedure was based on L-108-3.3 b and L-110-3.5. This is not an underground power cable or an underground electric duct bank therefore conduit bracket were not used.			

INSPECTOR OR REPRESENTATIVE		
Date 11/19/2018	Typed or Printed Name and Title Khaled Hamad	Signature Khaled Hamad

U.S. Department of Transportation **Federal Aviation Administration**	**Construction Progress and Inspection Report** **NAPMRC**		Inspection Date 11/20/2018 Project Name TO#15-Ref. Crack_Outdoor_Phase1
Contractor & # of Personnel AE Stone 1Lbor+1Operator	Contractor & # of Personnel	Contractor & # of Personnel GDIT 4 tech.+1Tech. Lead Craig Testing 1 person	Contractor & # of Personnel
Equipment On-Site 1) Mini Excavator 2) Nuclear Field Density 3) Plate Viabrator 4) Construction Hand Tools			
Start Time – 7:30 AM Stop Time – 4:30 PM	Temperature High 51 deg. F Low 28 deg. F	Humidity 56%	Conditions Cloudy wind gusts 14mph
Site Activities 1)Nuclear Field Density on to the trench. STA 0+77.5 offsets 3ft, 7.5ft, 12ft 2) Digging instrumentation trench out 3) Remove conduit from trench 4) Widen trench, total width is 40in since the chairs are 33in wide for the 6 conduits. 5)Compacted the bottom of the trench with a plate viabrator, and hand tamper			
Materials Delivered N/A			
Materials Removed P-154 from trench			
Laboratory and Field Testing Performed Old trench (Demolished) field density			
Meetings/Discussions Met with FAA team to discuss the trench the decision was made to consider the instrumentation conduit as an electric conduit, bury it 17in from top of the concrete slab and fill it with concrete.			
Safety Concerns N/A			
Problem Areas/Additional Comments N/A			

INSPECTOR OR REPRESENTATIVE		
Date 11/21/2018	Typed or Printed Name and Title Khaled Hamad, Sr. Civil Engineer/Construction	Signature Khaled Hamad

NATIONAL AIRPORT PAVEMENT
TEST FACILITY

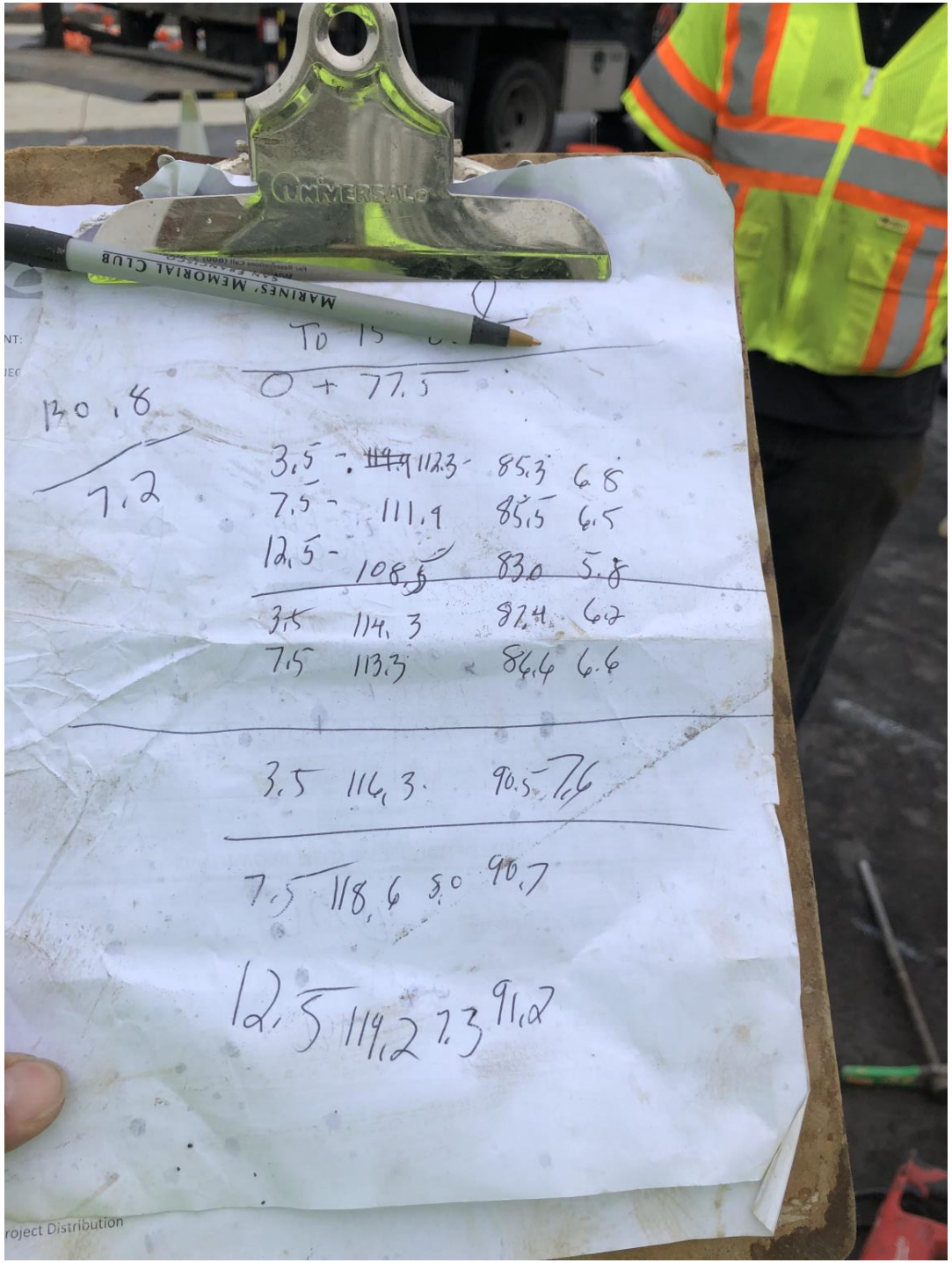
UNIVERSAL
MARINES' MEMORIAL CLUB
To 15
0 + 77.5
130.8
7.2
3.5 - 112.3 85.3 6.8
7.5 - 111.9 85.5 6.5
12.5 - 108.5 83.0 5.8
3.5 114.3 82.4 6.2
7.5 113.3 86.6 6.6
3.5 116.3 90.5 7.6
7.5 118.6 8.0 90.7
12.5 119.2 7.3 91.2
roject Distribution

NATIONAL AIRPORT PAVEMENT
TEST FACILITY
LET'S

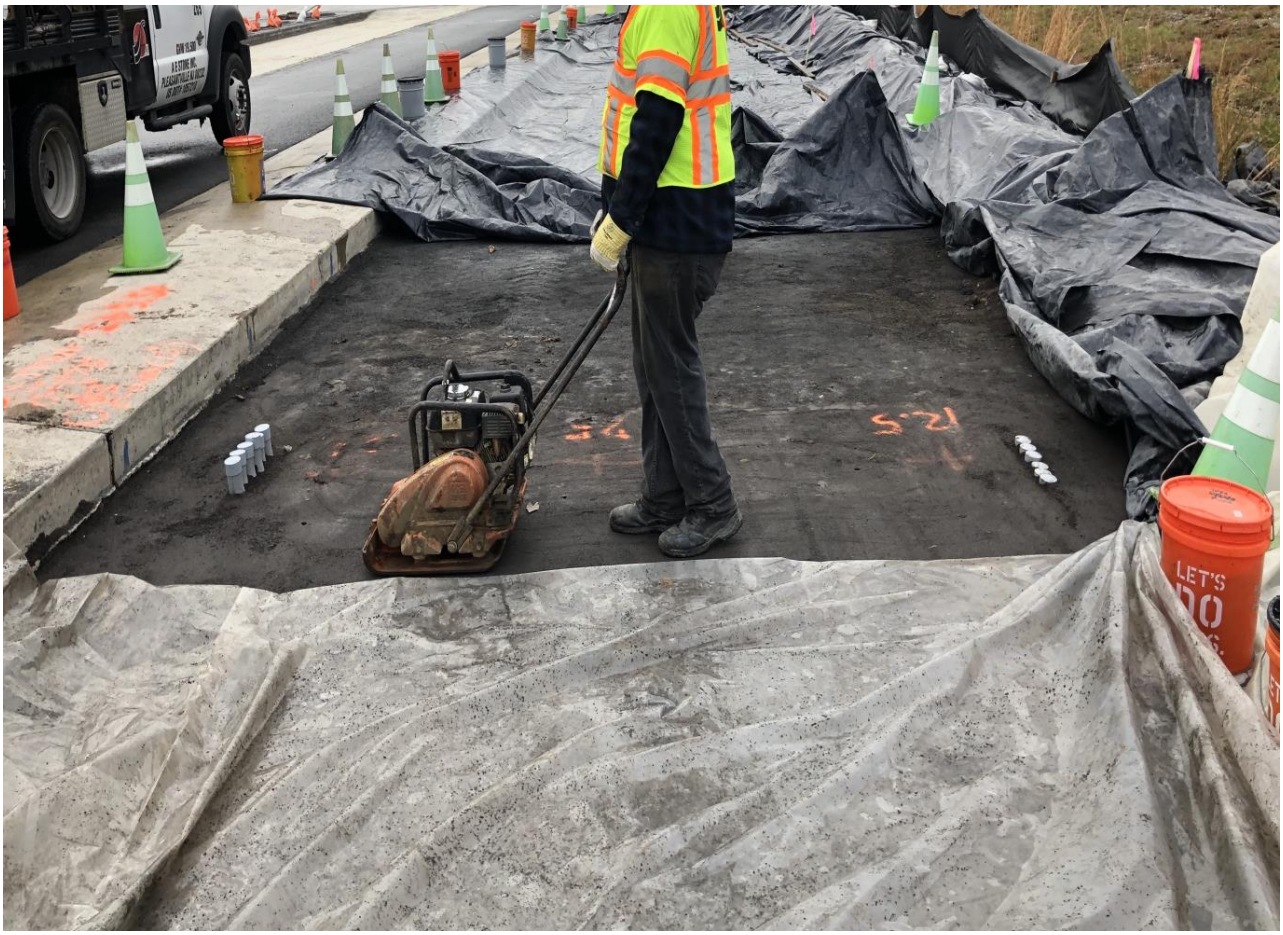
LET'S

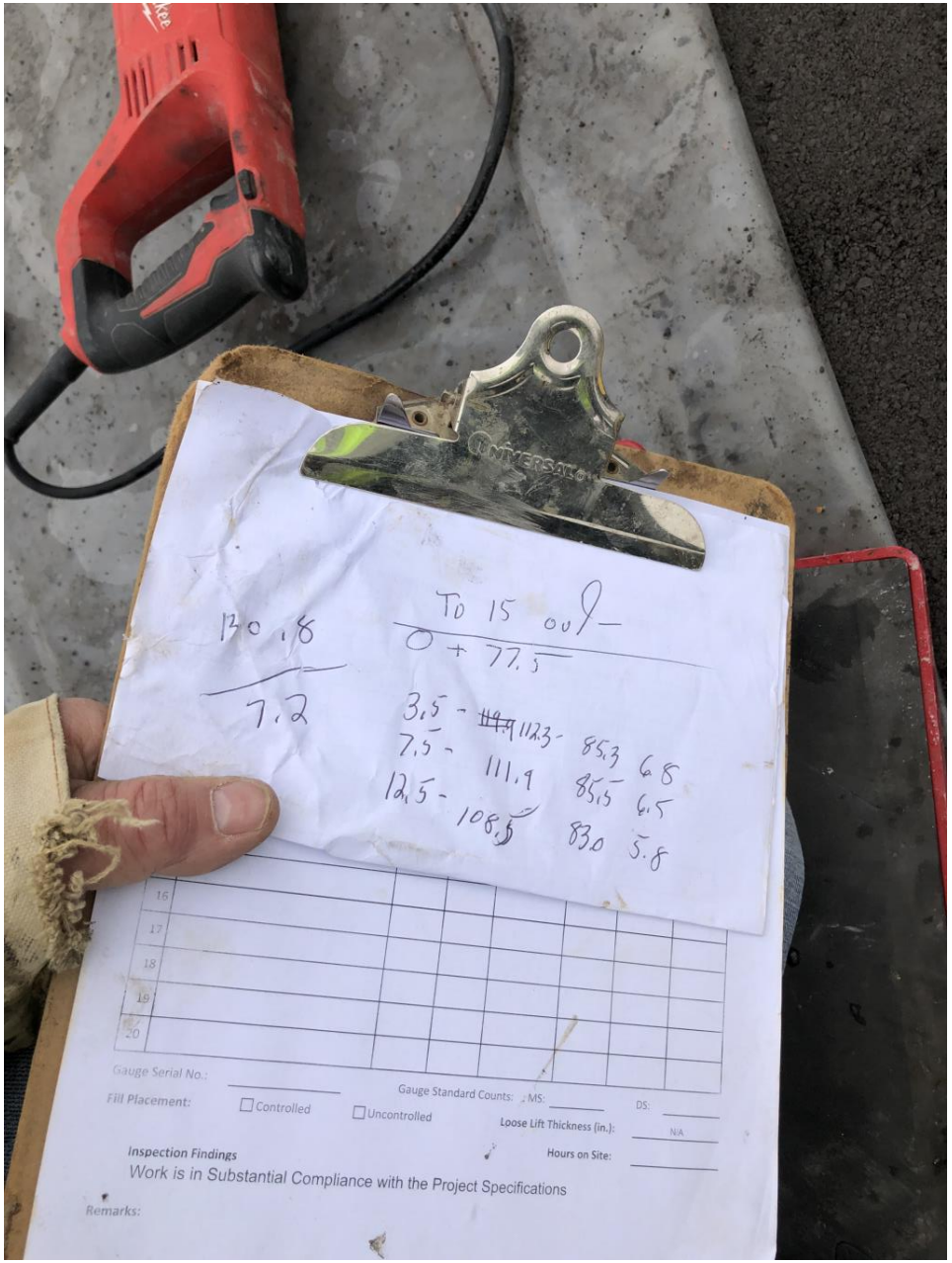
UNIVERSAL
To 15 00/-
0 + 77.5
130.8
7.2
3.5 - 112.3 - 85.3 6.8
7.5 - 111.9 85.5 6.5
12.5 - 108.5 83.0 5.8
16
17
18
19
20
Gauge Serial No.:
Gauge Standard Counts: MS:
DS:
Fill Placement:
Controlled
Uncontrolled
Loose Lift Thickness (in.):
N/A
Hours on Site:
Inspection Findings
Work is in Substantial Compliance with the Project Specifications
Remarks:

National
+ 55
+ 52
+ 12.5

Stone
INCORPORATED

U.S. Department of Transportation **Federal Aviation Administration**	**Construction Progress and Inspection Report** **NAPMRC**		Inspection Date 11/21/2018 Project Name TO#15-Ref. Crack_Outdoor_Phase1
Contractor & # of Personnel	Contractor & # of Personnel	Contractor & # of Personnel	Contractor & # of Personnel
Equipment On-Site			
Start Time - Stop Time -	Temperature High 49 deg. F Low 20 deg. F	Humidity 55%	Conditions Clear. Wind Gusts 9mph
Site Activities **NO ACTIVITIES**			
Materials Delivered			
Materials Removed			
Laboratory and Field Testing Performed			
Meetings/Discussions			
Safety Concerns			
Problem Areas/Additional Comments			

INSPECTOR OR REPRESENTATIVE		
Date 11/21/2018	Typed or Printed Name and Title Khaled Hamad, Sr. Civil Engineer/Construction	Signature Khaled Hamad

U.S. Department of Transportation **Federal Aviation Administration**	**Construction Progress and Inspection Report** **NAPMRC**		Inspection Date 11/26/2018 Project Name TO#15 Ref. Crack._Phase 1_Outdoor
Contractor & # of Personnel GDIT 3 labor	Contractor & # of Personnel	Contractor & # of Personnel	Contractor & # of Personnel
Equipment On-Site Sump Pump x 2 Hp pump x 1			
Start Time – 7:30AM Stop Time – 11:00 AM	Temperature High temp. 56 deg. F Low temp. 35 deg. F	Humidity 100%	Conditions Rainy. Cloud cover 100%. Wind Gusts 29mph
Site Activities Pumped water from trench and site area. **No Activities**			
Materials Delivered			
Materials Removed			
Laboratory and Field Testing Performed			
Meetings/Discussions			
Safety Concerns			
Problem Areas/Additional Comments			

INSPECTOR OR REPRESENTATIVE		
Date 11/26/2018	Typed or Printed Name and Title Khaled Hamad	Signature Khaled Hamad

U.S. Department of Transportation **Federal Aviation Administration**	**Construction Progress and Inspection Report** **NAPMRC**		Inspection Date 11/28/2018 Project Name TO#15 Ref. Crack_Outdoor_Phase 1
Contractor & # of Personnel GDIT 3 Labor+1 Operator+1 Safety Officer	Contractor & # of Personnel Kubiak 1 Technician	Contractor & # of Personnel	Contractor & # of Personnel
Equipment On-Site 1) Conduit heat bender 2) Electric generator 3) Mini excavator 4) Hand tools,			
Start Time – 7:30 AM Stop Time – 4:30 PM	Temperature High 47 deg. F Low 28 deg. F	Humidity 74%	Conditions Partly Cloudy. Wind 16 mph
Site Activities Install Chairs Conduit under the concrete slab Install chairs and conduit from the edge of concrete slab to the DAQ			
Materials Delivered Conduit Chairs Tie wire			
Materials Removed			
Laboratory and Field Testing Performed			
Meetings/Discussions Preparatory meeting with Kubiak where they discussed the scope of work. Discussed project spec and National electric code requirements for low voltage. Also, how the trench from the concrete edge to the DAQ is going to be back filled and tamped with a hand tamper			
Safety Concerns			
Problem Areas/Additional Comments			
INSPECTOR OR REPRESENTATIVE			

Date	Typed or Printed Name and Title	Signature
11/28/2019	Khaled Hamad, Ph.D., P.E. Sr. Civil Engineer/Construction Engineer	Khaled Hamad

U.S. Department of Transportation **Federal Aviation Administration**	**Construction Progress and Inspection Report** **NAPMRC**		Inspection Date 11/29/2018 Project Name TO#15 Ref. Crack._Outdoor_Phase 1
Contractor & # of Personnel	Contractor & # of Personnel	Contractor & # of Personnel	Contractor & # of Personnel
Equipment On-Site			
Start Time - Stop Time -	Temperature High 47 deg. F Low 28 deg. F	Humidity 74%	Conditions Windy, wind speed 16 mph
Site Activities NO Activities			
Materials Delivered			
Materials Removed			
Laboratory and Field Testing Performed			
Meetings/Discussions			
Safety Concerns			
Problem Areas/Additional Comments			

INSPECTOR OR REPRESENTATIVE		
Date 11/29/2018	Typed or Printed Name and Title Khaled Hamad	Signature Khaled Hamad

U.S. Department of Transportation **Federal Aviation Administration**	**Construction Progress and Inspection Report** **NAPMRC**		Inspection Date 11/30/2018 Project Name TO#15 Ref. Crack._Outdoor_Phase 1
Contractor & # of Personnel	Contractor & # of Personnel	Contractor & # of Personnel	Contractor & # of Personnel
Equipment On-Site			
Start Time - Stop Time -	Temperature High 49 deg. F Low 30 deg. F	Humidity 73%	Conditions Cloudy, minimal rain, Wind: calm
Site Activities NO Activities			
Materials Delivered			
Materials Removed			
Laboratory and Field Testing Performed			
Meetings/Discussions			
Safety Concerns			
Problem Areas/Additional Comments			

INSPECTOR OR REPRESENTATIVE		
Date 11/29/2018	Typed or Printed Name and Title Khaled Hamad	Signature Khaled Hamad

U.S. Department of Transportation
Federal Aviation Administration

Construction Progress and Inspection Report

NAPMRC

Inspection Date
12/04/2018

Project Name
TO#15_Ref. Crack._Outdoor Phase 1

Contractor & # of Personnel	Contractor & # of Personnel	Contractor & # of Personnel	Contractor & # of Personnel
GDIT 4 personnel	Feriozzi 11 personnel	Saw Cut Contractor 4 personnel	Craig Testing 3 personnel

Equipment On-Site

1) Concrete Viabrator
2) Concrete finishing Tools
3) Hand Tools
4) Saw
5) Leaf blowers

Start Time – 7:00AM Stop Time -6:00 PM	Temperature High 44 deg F Low 24 deg. F	Humidity 63%	Conditions Clear

Site Activities

Materials Delivered

1) 48 CY concrete
2) 1 roll of plastic

Materials Removed
non

Laboratory and Field Testing Performed

Truck	Amount (CY)	Location Covered Slab		Temperature (deg. F)	Air%	Slump (in)	Unit Wt (IB/ft3)
		Begin STA	End STA				
1	10	STA 1+20	STA 1+52.5	66.2	5.4%	3	146.6
2	10	STA 0+87.5	STA 1+20	64.4	6.1%	4.5	145
3	10	STA 0+55	STA 0+87.5	65.7	5.5%	4 3/4	145.8
4	10	STA 0+22.5	STA 0+55	63	5.4%	4 1/2	145.8
5	6	STA 0+7.5	STA 0+22.5	N/A			
6	2	STA 0+2.5	STA 0+7.5				

Discussions As per FAA request (Murphy Flynn) the concrete surface finish was changed from burlap surface finish to broom surface finish.		
Safety Concerns N/A		
Problem Areas/Additional Comments Saw cut subcontractor had the wrong saw blade which delayed the start of saw cutting. The operator that was on site was not able to run the saw; which caused issues with the first saw cut. Contacted the company; operator replaced and saw cutting completed successfully.		
INSPECTOR OR REPRESENTATIVE		
Date 12/04/2018	Typed or Printed Name and Title Khaled Hamad	Signature *Khaled Hamad*

Tr1

DELIVERY TICKET

PENN JERSEY BUILDING MATERIALS CO., INC.

PENN JERSEY BLDG MTRLS - EHT
P.O. BOX 981
PLEASANTVILLE, NJ 08232
OFFICE 609-645-8135
PLANT 609-641-6994

DRIVER	TRUCK NO.	TIME OUT
JPARK	256	8:24
ARRIVE JOB	DEPART JOB	TIME IN
8:51	9:25	

6TA 1+20 to 6TA 1+52.5

E:
NUTES PER CUBIC YARD UNLOADING TIME PERMITTED
ITIONAL TIME SUBJECT TO A CHARGE OF $75.00 PER HOUR.
SIGNED ASSUMES ALL RISK AND DOES HEREBY RELEASE
I AGREE TO SAVE HARMLESS THE PENN JERSEY BUILDING
ERIALS, INC., ITS EMPLOYEES AND AGENTS FROM ANY AND
CLAIMS WHICH MAY ARISE AS A RESULT OF DAMAGES
EN ASKED TO DRIVE BEYOND CURB LINE.

USTOMER NO.	JOB NO.	PURCHASE ORDER NO.	REFERENCE	TERMS	CLERK	DATE	TIME
379	36		ORDER #: 7006 TICKET #: 7081216	NET 30		12/04/18	07:51

HE FERIOZZI COMPANY
010 SUNSET AVENUE
TLANTIC CITY NJ 08401

SHIP TO
WEST COAT ROAD
SECOND GATE

EXCHANGES OR REFUNDS WITHOUT THIS SLIP - RETURNS SUBJECT
15% HANDLING CHARGE WITHIN 30 DAYS

Project FAA TEST STRIP

QUANTITY SHIPPED	QUANTITY ORDERED	UM	SKU	DESCRIPTION	SUGG	UNITS	PRICE/PER	EXTENSION
10.00		cy	900FLEX	900 FLEX		10.00		
0.00								
10.00			ENV	ENVIRONM		1.00		
1.00			F20	FREIGHT		1.00		
			FSC	FUELSC				
			WC	WINTER				
			Slump: 5.00					
			SALESPERSON: DEFAULT TAX CODE: NEW JERSEY NON-TAXABLE			CUM. TOTAL:10		

TION: PREVENT BODY CONTACT WITH CONCRETE;
CAUSE IRRITATION. SELLER NOT HELD RESPONSIBLE.

DESIGNS BASED ON 4" SLUMP + ½" WATER ADDED BEYOND
DESIGN REQUIREMENTS WILL BE AT PURCHASERS RISK AND
T BE SIGNED FOR BY AN AUTHORIZED REPRESENTATIVE.
DR ADDED GALS APPROVED BY

FOR TERMS AND CONDITIONS OF DELIVERY EQUIPMENT, SEE REVERSE SIDE.
I have read and understand the terms, conditions & charges and affirm that I am authorized to accept these terms for the purchaser.

X RECEIVED

CUSTOMER COPY

Tr 1

Truck	Driver	User	Disp Ticket Num	Ticket ID	Time	Date
		user		69950	8:06	12/4/18

Load Size	Mix Code	Returned	Qty	Mix Age	Seq	Load ID
10.00 CYDS	900FLEX				W	74761

Material	Design Qty	Required	Batched	% Moisture
CONC	910 lb	9428 lb	9400 lb	3.60% M
3/4STONE	1550 lb	24900 lb	24820 lb	
1/2STONE	250 lb	27320 lb	27320 lb	
TYPE1	529.0 lb	5290.0 lb	5300.0 lb	
FLYASH	176.0 lb	7060.0 lb	7050.0 lb	
WATER	37.8 gl	188.7 gl	188.7 gl	
AIR	22.30 oz	223.00 oz	221.00 oz	
HRWR	28.20 oz	282.00 oz	280.00 oz	

Actual Num Batches: 1

Load 35976 lb

Slump: 5.00 in #

DELIVERY TICKET

Tr2

PENN JERSEY BUILDING MATERIALS CO., INC.

PENN JERSEY BLDG MTRLS - EHT
P.O. BOX 981
PLEASANTVILLE, NJ 08232
OFFICE 609-645-8135
PLANT 609-641-6994

DRIVER	TRUCK NO.	TIME OUT
DHAND	254	9:10
ARRIVE JOB	DEPART JOB	TIME IN
9:20	9:47	

OTE:
INUTES PER CUBIC YARD UNLOADING TIME PERMITTED.
DITIONAL TIME SUBJECT TO A CHARGE OF $75.00 PER HOUR.
HE SIGNED ASSUMES ALL RISK AND DOES HEREBY RELEASE
O AGREE TO SAVE HARMLESS THE PENN JERSEY BUILDING
TERIALS, INC., ITS EMPLOYEES AND AGENTS FROM ANY AND
L CLAIMS WHICH MAY ARISE AS A RESULT OF DAMAGES
HEN ASKED TO DRIVE BEYOND CURB LINE.

STA 0+87.5 to STA 1+20

CUSTOMER NO.	JOB NO.	PURCHASE ORDER NO.	REFERENCE	TERMS	CLERK	DATE	TIME
379	36		ORDER #: 7006 TICKET #: 7081220	NET 30		12/04/18	08:59

HE FERIOZZI COMPANY
010 SUNSET AVENUE
TLANTIC CITY , NJ 08401

SHIP TO: WEST COAT ROAD
SECOND GATE

O EXCHANGES OR REFUNDS WITHOUT THIS SLIP - RETURNS SUBJECT
O 15% HANDLING CHARGE WITHIN 30 DAYS

Project FAA TEST STRIP

QUANTITY SHIPPED	QUANTITY ORDERED	UM	SKU	DESCRIPTION	SUGG	UNITS	PRICE/PER	EXTENSION
10.00 0.00		cy	900FLEX	900 FLEX		10.00		
10.00 1.00			ENV F20 FSC	ENVIRONM FREIGHT FUELSC		1.00 1.00		
			WC	WINTER				
		Slump: 4.00						
		SALESPERSON: DEFAULT TAX CODE: NEW JERSEY NON-TAXABLE				CUM. TOTAL:20		

AUTION: PREVENT BODY CONTACT WITH CONCRETE;
AY CAUSE IRRITATION. SELLER NOT HELD RESPONSIBLE.

X DESIGNS BASED ON 4" SLUMP + ½" WATER ADDED BEYOND
X DESIGN REQUIREMENTS WILL BE AT PURCHASERS RISK AND
JST BE SIGNED FOR BY AN AUTHORIZED REPRESENTATIVE.

ATER ADDED GALS APPROVED BY

FOR TERMS AND CONDITIONS OF DELIVERY EQUIPMENT, SEE REVERSE SIDE.
I have read and understand the terms, conditions & charges and affirm that I am authorized to accept these terms for the purchaser.

X

RECEIVED

CUSTOMER COPY

Tr2

Truck	Driver	User	Disp Ticket Num	Ticket ID	Time	Date
254		user	7081220	69952	9:01	12/4/18

Load Size	Mix Code	Returned	Qty	Mix Age	Seq	Load ID
10.00 CYDS	900FLEX				W	74763

Material	Design Qty	Required	Batched	% Moisture
CONC	910 lb	9428 lb	9360 lb	3.60% M
3/4STONE	1550 lb	24860 lb	24800 lb	
1/2STONE	250 lb	27300 lb	27300 lb	
TYPE1	529.0 lb	5290.0 lb	5330.0 lb	
FLYASH	176.0 lb	7090.0 lb	7080.0 lb	
WATER	37.8 gl	188.7 gl	188.1 gl	
AIR	22.30 oz	223.00 oz	223.00 oz	
HRWR	28.20 oz	282.00 oz	284.00 oz	

Actual Num Batches: 1

Load 35982 lb

Slump: 4.00 in #

Tr3

PENN JERSEY
BUILDING MATERIALS CO., INC.

DELIVERY TICKET

PENN JERSEY BLDG MTRLS - EHT
P.O. BOX 981
PLEASANTVILLE, NJ 08232
OFFICE 609-645-8135
PLANT 609-641-6994

DRIVER	TRUCK NO.	TIME OUT
THAND	246	9:30
ARRIVE JOB	DEPART JOB	TIME IN
9:42		

TE:
INUTES PER CUBIC YARD UNLOADING TIME PERMITTED.
DITIONAL TIME SUBJECT TO A CHARGE OF $75.00 PER HOUR.
E SIGNED ASSUMES ALL RISK AND DOES HEREBY RELEASE
D AGREE TO SAVE HARMLESS THE PENN JERSEY BUILDING
TERIALS, INC., ITS EMPLOYEES AND AGENTS FROM ANY AND
. CLAIMS WHICH MAY ARISE AS A RESULT OF DAMAGES
EN ASKED TO DRIVE BEYOND CURB LINE.

STA 0+55 to STA 0+87.5

CUSTOMER NO.	JOB NO.	PURCHASE ORDER NO.	REFERENCE	TERMS	CLERK	DATE	TIME
379	36		ORDER #: 7006 TICKET #: 7081222	NET 30		12/04/18	09:20

HE FERIOZZI COMPANY
010 SUNSET AVENUE
TLANTIC CITY NJ 08401

SHIP TO
WEST COAT ROAD
SECOND GATE

EXCHANGES OR REFUNDS WITHOUT THIS SLIP - RETURNS SUBJECT
15% HANDLING CHARGE WITHIN 30 DAYS

Project FAA TEST STRIP

QUANTITY SHIPPED	QUANTITY ORDERED	UM	SKU	DESCRIPTION	SUGG	UNITS	PRICE/PER	EXTENSION
10.00 0.00		cy	900FLEX	900 FLEX		10.00		
10.00 1.00			ENV F20 FSC	ENVIRONM FREIGHT FUELSC		1.00 1.00		
			WC	WINTER				
		Slump: 4.00						
		SALESPERSON: DEFAULT TAX CODE: NEW JERSEY NON-TAXABLE				CUM.	TOTAL:30	

UTION: PREVENT BODY CONTACT WITH CONCRETE;
Y CAUSE IRRITATION. SELLER NOT HELD RESPONSIBLE.

DESIGNS BASED ON 4" SLUMP + ½" WATER ADDED BEYOND
DESIGN REQUIREMENTS WILL BE AT PURCHASERS RISK AND
IT BE SIGNED FOR BY AN AUTHORIZED REPRESENTATIVE.
ER ADDED GALS APPROVED BY

FOR TERMS AND CONDITIONS OF DELIVERY EQUIPMENT, SEE REVERSE SIDE.
I have read and understand the terms, conditions & charges and affirm that I am authorized to accept these terms for the purchaser.

X

RECEIVED

CUSTOMER COPY

Tr3

Truck	Driver	User	Disp Ticket Num	Ticket ID	Time	Date
246		user	7081222	69954	9:22	12/4/18

Load Size	Mix Code	Returned	Qty	Mix Age	Seq	Load ID
10.00 CYDS	900FLEX				W	74765

Material	Design Qty	Required	Batched	% Moisture
CONC	910 lb	9428 lb	9340 lb	3.60% M
3/4STONE	1550 lb	24840 lb	24800 lb	
1/2STONE	250 lb	27300 lb	27280 lb	
TYPE1	529.0 lb	5280.0 lb	5310.0 lb	
FLYASH	176.0 lb	7070.0 lb	7060.0 lb	
TEMPER	.0	25.0 gl	25.0 gl	
WATER	37.8 gl	188.7 gl	188.1 gl	
AIR	22.30 oz	223.00 oz	221.00 oz	
HRWR	28.20 oz	282.00 oz	280.00 oz	

Actual
Load 36160 lb
Slump: 4.00 in #

Num Batches: 1

TrA

PENN JERSEY BUILDING MATERIALS CO., INC.

DELIVERY TICKET

PENN JERSEY BLDG MTRLS - EHT
P.O. BOX 981
PLEASANTVILLE, NJ 08232
OFFICE 609-645-8135
PLANT 609-641-6994

DRIVER	TRUCK NO.	TIME OUT
RSEMP	240	950
ARRIVE JOB	DEPART JOB	TIME IN
1000		

FE:
INUTES PER CUBIC YARD UNLOADING TIME PERMITTED.
ITIONAL TIME SUBJECT TO A CHARGE OF $75.00 PER HOUR.
SIGNED ASSUMES ALL RISK AND DOES HEREBY RELEASE
AGREE TO SAVE HARMLESS THE PENN JERSEY BUILDING
ERIALS, INC., ITS EMPLOYEES AND AGENTS FROM ANY AND
CLAIMS WHICH MAY ARISE AS A RESULT OF DAMAGES
EN ASKED TO DRIVE BEYOND CURB LINE.

STA 0+22.5 to STA 0+55

CUSTOMER NO.	JOB NO.	PURCHASE ORDER NO.	REFERENCE	TERMS	CLERK	DATE	TIME
379	36		ORDER #: 7006 TICKET #: 7081223	NET 30		12/04/18	09:39

HE FERIOZZI COMPANY
010 SUNSET AVENUE
TLANTIC CITY NJ 08401

SHIP TO
WEST COAT ROAD
SECOND GATE

EXCHANGES OR REFUNDS WITHOUT THIS SLIP - RETURNS SUBJECT
15% HANDLING CHARGE WITHIN 30 DAYS

Project FAA TEST STRIP

QUANTITY SHIPPED	QUANTITY ORDERED	UM	SKU	DESCRIPTION	SUGG	UNITS	PRICE/PER	EXTENSION
10.00 0.00		cy	900FLEX	900 FLEX		10.00		
10.00 1.00			ENV F20 FSC	ENVIRONM FREIGHT FUELSC		1.00 1.00		
			WC	WINTER				
			Slump: 4.00					
			SALESPERSON: DEFAULT TAX CODE: NEW JERSEY NON-TAXABLE			CUM.	TOTAL:40	

TION: PREVENT BODY CONTACT WITH CONCRETE;
/ CAUSE IRRITATION. SELLER NOT HELD RESPONSIBLE.

DESIGNS BASED ON 4" SLUMP + ½" WATER ADDED BEYOND
DESIGN REQUIREMENTS WILL BE AT PURCHASERS RISK AND
T BE SIGNED FOR BY AN AUTHORIZED REPRESENTATIVE.
ER ADDED GALS APPROVED BY

FOR TERMS AND CONDITIONS OF DELIVERY EQUIPMENT, SEE REVERSE SIDE.
I have read and understand the terms, conditions & charges and affirm that I am authorized to accept these terms for the purchaser.

X

RECEIVED

CUSTOMER COPY

TrA

Truck	Driver	User	Disp Ticket Num	Ticket ID	Time	Date
240		user	7081223	69955	9:40	12/4/18

Load Size	Mix Code	Returned	Qty	Mix Age	Seq	Load ID
10.00 CYDS	900FLEX				W	74766

Material	Design Qty	Required	Batched	% Moisture
CONC	910 lb	9428 lb	9400 lb	3.60% M
3/4STONE	1550 lb	24900 lb	24860 lb	
1/2STONE	250 lb	27360 lb	27340 lb	
TYPE1	529.0 lb	5290.0 lb	5320.0 lb	*
FLYASH	176.0 lb	7080.0 lb	7070.0 lb	
WATER	37.8 gl	188.7 gl	187.5 gl	
AIR	22.30 oz	223.00 oz	223.00 oz	
HRWR	28.20 oz	282.00 oz	284.00 oz	

Actual
Load 36007 lb
Slump: 4.00 in #

Num Batches: 1

Tr 5

PENN JERSEY
BUILDING MATERIALS CO., INC.

DELIVERY TICKET

PENN JERSEY BLDG MTRLS - EHT
P.O. BOX 981
PLEASANTVILLE, NJ 08232
OFFICE 609-645-8135
PLANT 609-641-6994

DRIVER	TRUCK NO.	TIME OUT
JPARK	256	10:11
ARRIVE JOB	**DEPART JOB**	**TIME IN**
10:22	11:00	

TE:
INUTES PER CUBIC YARD UNLOADING TIME PERMITTED
DITIONAL TIME SUBJECT TO A CHARGE OF $75.00 PER HOUR.
E SIGNED ASSUMES ALL RISK AND DOES HEREBY RELEASE
D AGREE TO SAVE HARMLESS THE PENN JERSEY BUILDING
TERIALS, INC., ITS EMPLOYEES AND AGENTS FROM ANY AND
, CLAIMS WHICH MAY ARISE AS A RESULT OF DAMAGES
EN ASKED TO DRIVE BEYOND CURB LINE.

STA 0+7.5 to STA 0+22.5

CUSTOMER NO.	JOB NO.	PURCHASE ORDER NO.	REFERENCE	TERMS	CLERK	DATE	TIME
379	36		ORDER #: 7006 TICKET #: 7081225	NET 30		12/04/18	10:01

HE FERIOZZI COMPANY
010 SUNSET AVENUE
TLANTIC CITY NJ 08401

SHIP TO
WEST COAT ROAD
SECOND GATE

EXCHANGES OR REFUNDS WITHOUT THIS SLIP - RETURNS SUBJECT
15% HANDLING CHARGE WITHIN 30 DAYS

Project FAA TEST STRIP

QUANTITY SHIPPED	QUANTITY ORDERED	UM	SKU	DESCRIPTION	SUGG	UNITS	PRICE/PER	EXTENSION
6.00 0.00		cy	900FLEX	900 FLEX		6.00		
6.00 1.00			ENV F20 FSC	ENVIRONM FREIGHT FUELSC		1.00 1.00		
			WC	WINTER				
			Slump: 4.00					
			SALESPERSON: DEFAULT TAX CODE: NEW JERSEY NON-TAXABLE			CUM. TOTAL:46		

TION: PREVENT BODY CONTACT WITH CONCRETE.
CAUSE IRRITATION. SELLER NOT HELD RESPONSIBLE.

DESIGNS BASED ON 4" SLUMP + ½" WATER ADDED BEYOND
DESIGN REQUIREMENTS WILL BE AT PURCHASERS RISK AND
T BE SIGNED FOR BY AN AUTHORIZED REPRESENTATIVE.
ER ADDED GALS APPROVED BY

FOR TERMS AND CONDITIONS OF DELIVERY EQUIPMENT, SEE REVERSE SIDE.
I have read and understand the terms, conditions & charges and affirm that I am authorized to accept these terms for the purchaser.

X Pete FC
RECEIVED

CUSTOMER COPY

Tr 5

Truck	Driver	User	Disp Ticket Num	Ticket ID	Time	Date
256		user	7081225	69956	10:02	12/4/18

Load Size	Mix Code	Returned	Qty	Mix Age	Seq	Load ID
6.00 CYDS	900FLEX				W	74768

Material	Design Qty	Required	Batched	% Moisture
CONC	910 lb	5857 lb	5640 lb	3.60% M
3/4STONE	1550 lb	14940 lb	14880 lb	
1/2STONE	250 lb	16380 lb	16360 lb	
TYPE1	529.0 lb	3174.0 lb	3200.0 lb	*
FLYASH	176.0 lb	4256.0 lb	4250.0 lb	
WATER	37.8 gl	113.2 gl	113.8 gl	
AIR	22.30 oz	133.80 oz	133.00 oz	
HRWR	28.20 oz	169.20 oz	168.00 oz	

Actual
Load 21579 lb
Slump: 4.00 in #

Num Batches: 1

Tr6

PENN JERSEY
BUILDING MATERIALS CO., INC.

DELIVERY TICKET

PENN JERSEY BLDG MTRLS - EHT
P.O. BOX 981
PLEASANTVILLE, NJ 08232
OFFICE 609-645-8135
PLANT 609-641-6994

DRIVER	TRUCK NO.	TIME OUT
DHAND	254	10:50
ARRIVE JOB	DEPART JOB	TIME IN
10:7		

OTE:
INUTES PER CUBIC YARD UNLOADING TIME PERMITTED.
DITIONAL TIME SUBJECT TO A CHARGE OF $75.00 PER HOUR.
E SIGNED ASSUMES ALL RISK AND DOES HEREBY RELEASE
D AGREE TO SAVE HARMLESS THE PENN JERSEY BUILDING
ATERIALS, INC., ITS EMPLOYEES AND AGENTS FROM ANY AND
L CLAIMS WHICH MAY ARISE AS A RESULT OF DAMAGES
HEN ASKED TO DRIVE BEYOND CURB LINE.

STA 0+2.5 to STA 0+7.5

CUSTOMER NO.	JOB NO.	PURCHASE ORDER NO.	REFERENCE	TERMS	CLERK	DATE	TIME
379	36		ORDER #: 7006 TICKET #: 7081229	NET 30		12/04/18	10:49

HE FERIOZZI COMPANY
010 SUNSET AVENUE
TLANTIC CITY NJ 08401

SHIP TO
WEST COAT ROAD
SECOND GATE

EXCHANGES OR REFUNDS WITHOUT THIS SLIP - RETURNS SUBJECT
15% HANDLING CHARGE WITHIN 30 DAYS

Project FAA TEST STRIP

QUANTITY SHIPPED	QUANTITY ORDERED	UM	SKU	DESCRIPTION	SUGG	UNITS	PRICE/PER	EXTENSION
2.00 0.00		cy	900FLEX	900 FLEX		2.00		
2.00 1.00			ENV F20 FSC	ENVIRONM FREIGHT FUELSC		1.00 1.00		
			WC	WINTER				
			Slump: 4.00					
			SALESPERSON: DEFAULT TAX CODE: NEW JERSEY NON-TAXABLE			CUM.	TOTAL:48	

UTION: PREVENT BODY CONTACT WITH CONCRETE;
AY CAUSE IRRITATION. SELLER NOT HELD RESPONSIBLE.

K DESIGNS BASED ON 4" SLUMP + ½" WATER ADDED BEYOND
K DESIGN REQUIREMENTS WILL BE AT PURCHASERS RISK AND
IST BE SIGNED FOR BY AN AUTHORIZED REPRESENTATIVE
ATER ADDED GALS APPROVED BY

FOR TERMS AND CONDITIONS OF DELIVERY EQUIPMENT, SEE REVERSE SIDE.
I have read and understand the terms, conditions & charges and affirm that I am authorized to accept these terms for the purchaser.

X
RECEIVED

CUSTOMER COPY

Tr6

Truck	Driver	User	Disp Ticket Num	Ticket ID	Time	Date
254		user	7081229	69959	10:52	12/4/18

Load Size	Mix Code	Returned	Qty	Mix Age	Seq	Load ID
2.00 CYDS	900FLEX				W	74771

Material	Design Qty	Required	Batched	% Moisture
CONC	910 lb	1886 lb	1880 lb	3.60% M
3/4STONE	1550 lb	4980 lb	4960 lb	
1/2STONE	250 lb	5460 lb	5460 lb	
TYPE1	529.0 lb	1058.0 lb	1060.0 lb	
FLYASH	176.0 lb	1402.0 lb	1400.0 lb	
WATER	37.8 gl	37.7 gl	38.9 gl	
AIR	22.30 oz	44.60 oz	44.00 oz	
HRWR	28.20 oz	56.40 oz	56.00 oz	

Actual
Load 7191 lb
Slump: 4.00 in #

Num Batches: 1

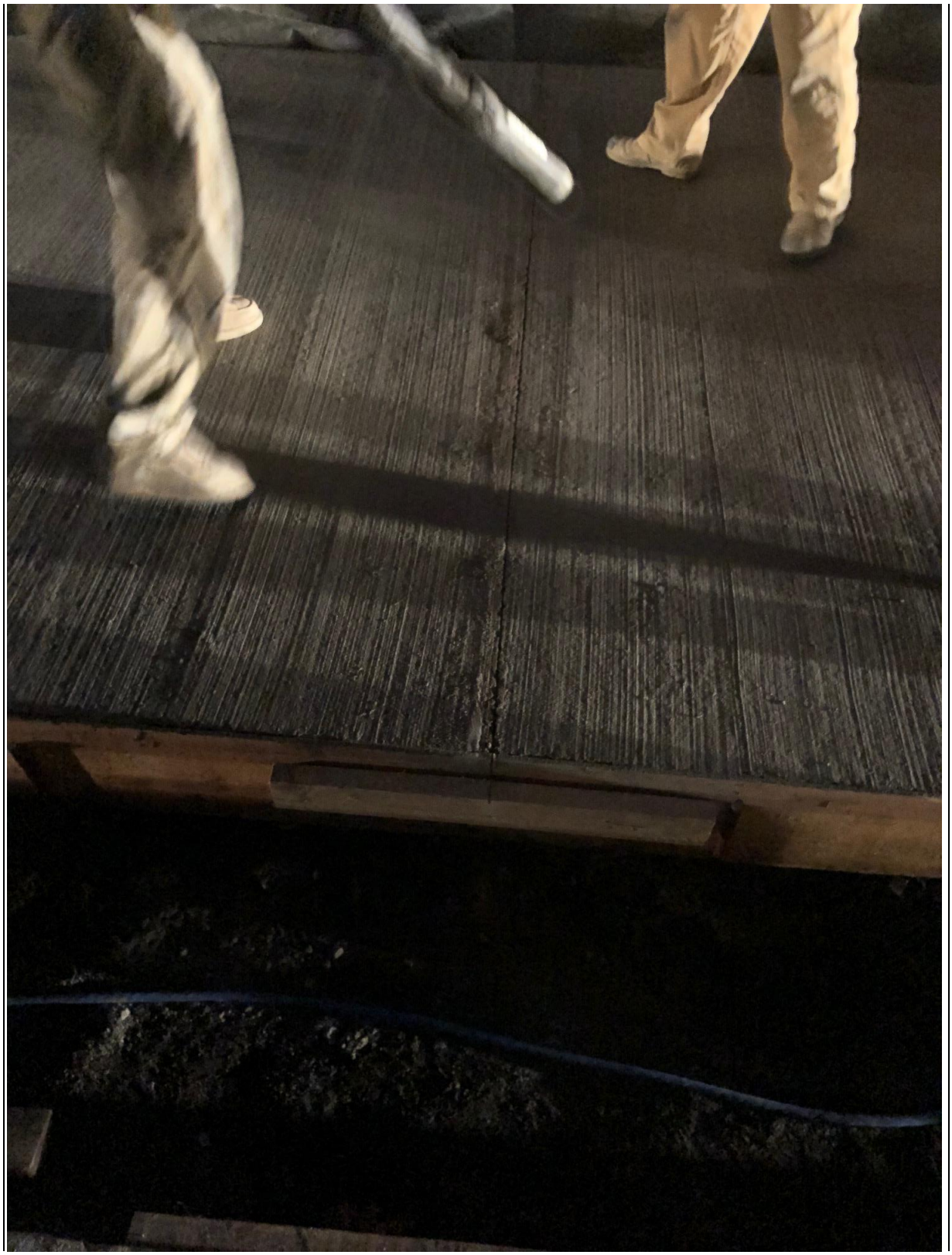

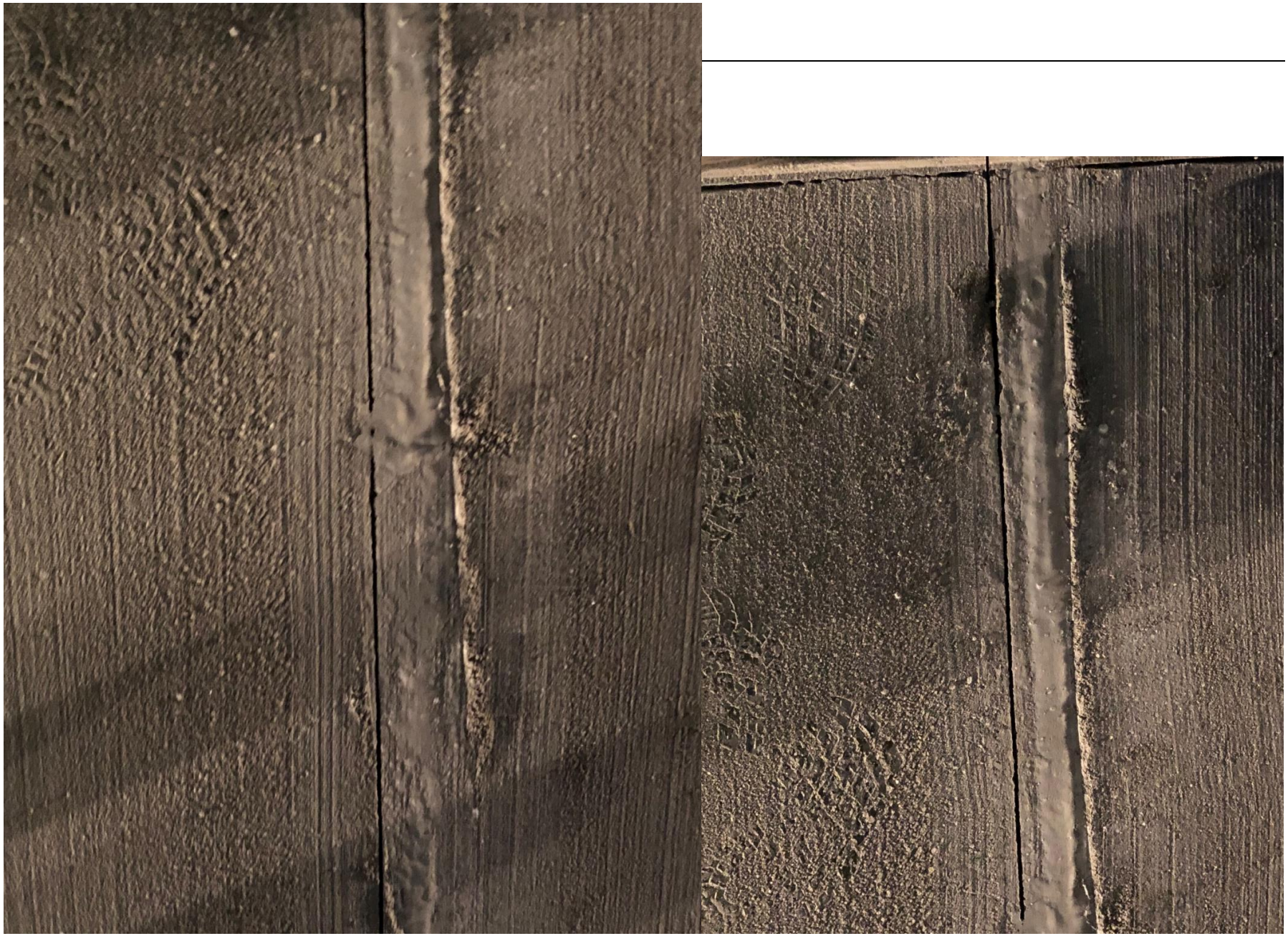

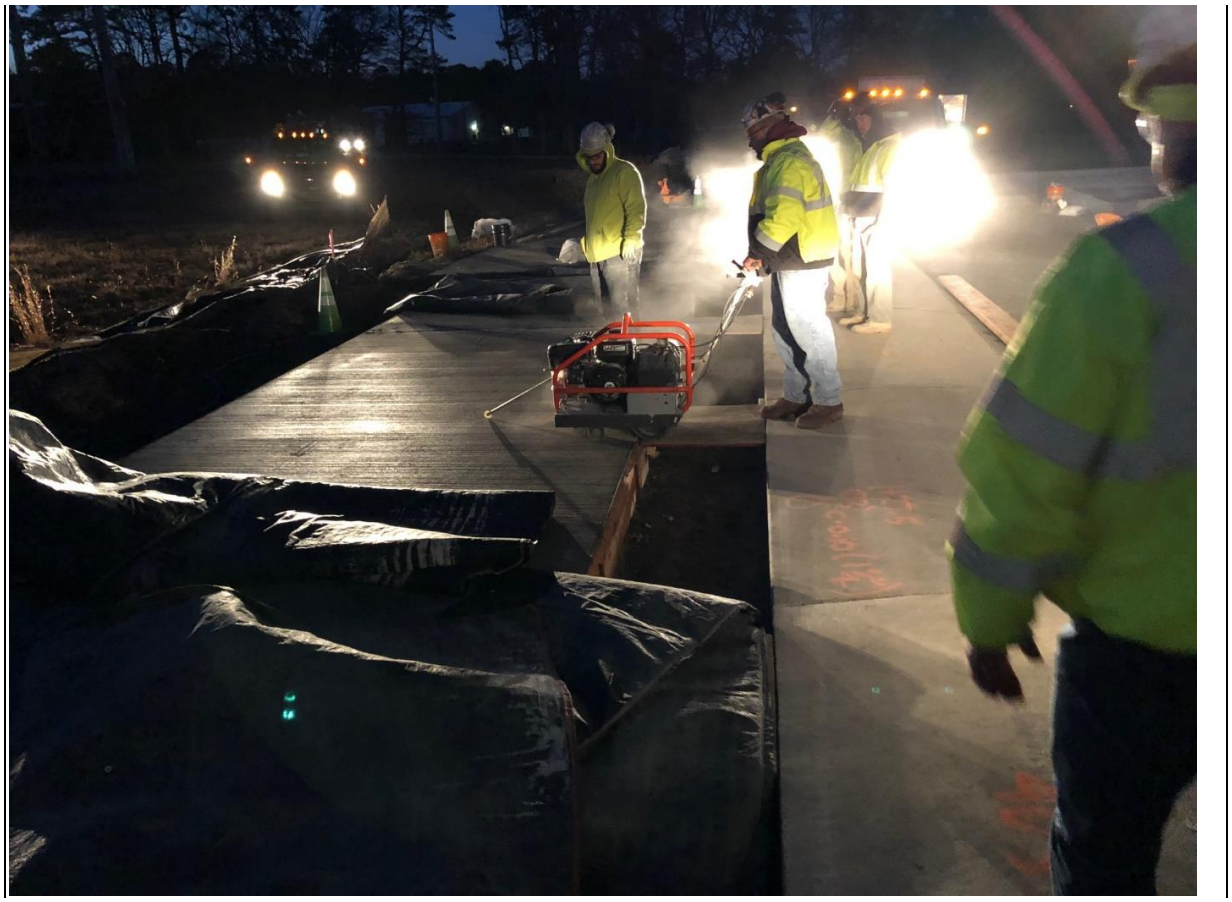

NATIONAL AIRPORT PAVEMENT
TEST FACILITY

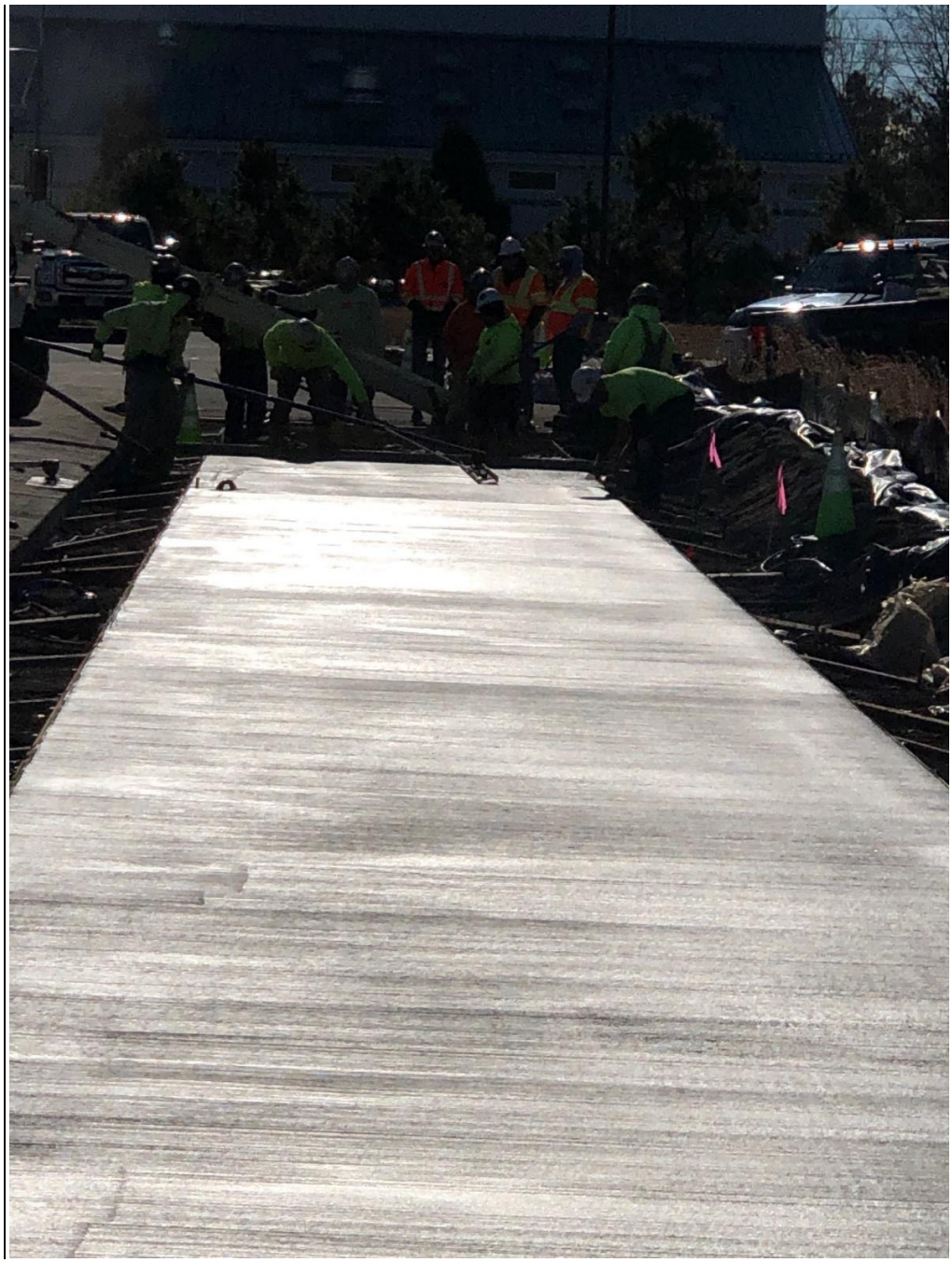

NATIONAL AIRPORT PAVEMENT
TEST FACILITY

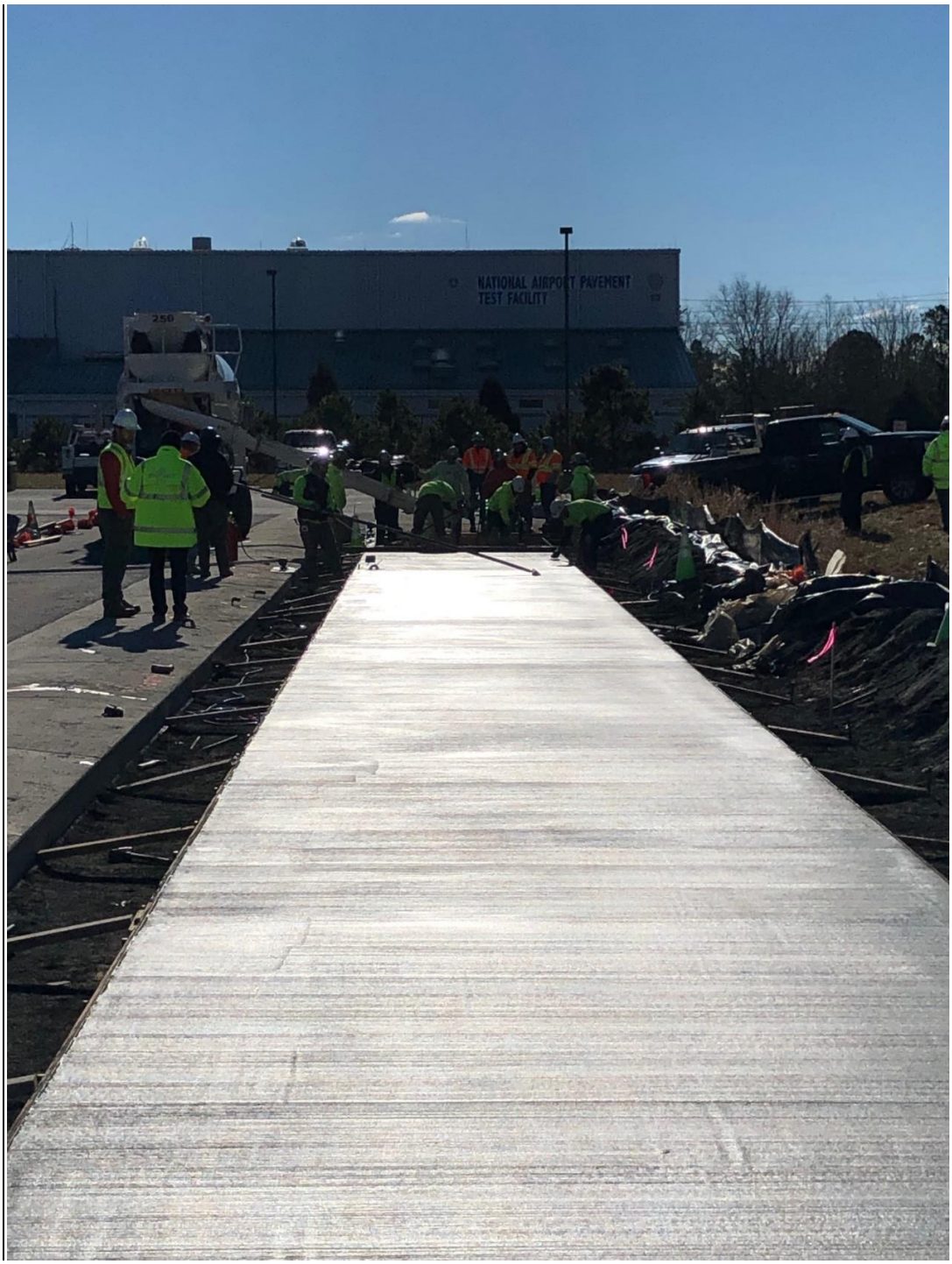
NATIONAL AIRPORT PAVEMENT
TEST FACILITY

NATIONAL AIRPORT PAVEMENT
TEST FACILITY

Bobcat
5600
Jackson

4x4
Bobcat

FERIZZI'S

CHESCO
610-883994

U.S. Department of Transportation **Federal Aviation Administration**	**Construction Progress and Inspection Report** **NAPMRC**		Inspection Date 12/05/2018 Project Name TO#15_Ref. Crack._Outdoor_Phase 1
Contractor & # of Personnel	Contractor & # of Personnel	Contractor & # of Personnel	Contractor & # of Personnel
Equipment On-Site			
Start Time - Stop Time -	Temperature High 31 deg. F Low 23 deg. F	Humidity 96%	Conditions Snow. Cloud cover 100% wind 13mph
Site Activities No Activities (Concrete Curing)			
Materials Delivered			
Materials Removed			
Laboratory and Field Testing Performed			
Meetings/Discussions			
Safety Concerns			
Problem Areas/Additional Comments			

INSPECTOR OR REPRESENTATIVE		
Date 12/05/2016	Typed or Printed Name and Title Khaled Hamad	Signature Khaled Hamad

U.S. Department of Transportation **Federal Aviation Administration**	**Construction Progress and Inspection Report** **NAPMRC**		Inspection Date 12/06/2018 Project Name TO#15_Ref. Crack._Outdoor_Phase 1
Contractor & # of Personnel	Contractor & # of Personnel	Contractor & # of Personnel	Contractor & # of Personnel
Equipment On-Site			
Start Time - Stop Time -	Temperature High 41 deg. F Low 25 deg. F	Humidity 96%	Conditions Cold. Cloud cover 0% wind 6mph
Site Activities No Activities (Concrete Curing)			
Materials Delivered			
Materials Removed			
Laboratory and Field Testing Performed			
Meetings/Discussions			
Safety Concerns			
Problem Areas/Additional Comments			

INSPECTOR OR REPRESENTATIVE		
Date 12/06/2016	Typed or Printed Name and Title Khaled Hamad	Signature Khaled Hamad

U.S. Department of Transportation **Federal Aviation Administration**	**Construction Progress and Inspection Report** **NAPMRC**		Inspection Date 12/07/2018 Project Name TO#15_Ref. Crack._Outdoor_Phase 1
Contractor & # of Personnel	Contractor & # of Personnel	Contractor & # of Personnel	Contractor & # of Personnel
Equipment On-Site			
Start Time - Stop Time -	Temperature High 43 deg. F Low 25 deg. F	Humidity	Conditions Cold.
Site Activities No Activities (Concrete Curing)			
Materials Delivered			
Materials Removed			
Laboratory and Field Testing Performed			
Meetings/Discussions			
Safety Concerns			
Problem Areas/Additional Comments			

INSPECTOR OR REPRESENTATIVE		
Date 12/06/2016	Typed or Printed Name and Title Khaled Hamad	Signature Khaled Hamad

U.S. Department of Transportation **Federal Aviation Administration**	**Construction Progress and Inspection Report** **NAPMRC**		Inspection Date 12/10/2018 Project Name TO#15_Ref. Crack._Outdoor_Phase 1
Contractor & # of Personnel	Contractor & # of Personnel	Contractor & # of Personnel	Contractor & # of Personnel
Equipment On-Site			
Start Time - Stop Time -	Temperature High 40 deg. F Low 25 deg. F	Humidity	Conditions Wind Low (mph): 0.0 - Wind High: 13.8 Dewpoint Low (F): 18.0 - Dewpoint High: 25.0 High Gusts (mph): 21.9
Site Activities No Activities (Concrete Curing)			
Materials Delivered			
Materials Removed			
Laboratory and Field Testing Performed			
Meetings/Discussions			
Safety Concerns			
Problem Areas/Additional Comments			

INSPECTOR OR REPRESENTATIVE		
Date 12/10/2016	Typed or Printed Name and Title Khaled Hamad	Signature Khaled Hamad

U.S. Department of Transportation **Federal Aviation Administration**	**Construction Progress and Inspection Report** **NAPMRC**		Inspection Date 12/11/2018 Project Name TO#15_Ref. Crack._Outdoor_Phase 1
Contractor & # of Personnel	Contractor & # of Personnel	Contractor & # of Personnel	Contractor & # of Personnel
Equipment On-Site			
Start Time Stop Time -	Temperature High 45deg. F Low 23 deg. F	Humidity	Conditions Wind Low (mph): 0.0 - Wind High: 5.8 Dewpoint Low (F): 19.0 - Dewpoint High: 30.0 High Gusts (mph): 0.0
Site Activities			
Materials Delivered			
Materials Removed			
Laboratory and Field Testing Performed			
Meetings/Discussions			
Safety Concerns			
Problem Areas/Additional Comments			

INSPECTOR OR REPRESENTATIVE		
Date 12/11/2016	Typed or Printed Name and Title Khaled Hamad	Signature Khaled Hamad

U.S. Department of Transportation **Federal Aviation Administration**	**Construction Progress and Inspection Report** **NAPMRC**		Inspection Date 12/12/2018 Project Name TO#15_Ref. Crack._Outdoor_Phase 1
Contractor & # of Personnel AE Stone/Feriozzi 3 labor	Contractor & # of Personnel	Contractor & # of Personnel	Contractor & # of Personnel
Equipment On-Site Hand Tools			
Start Time – 7:00AM Stop Time -4:30PM	Temperature High 45deg. F Low 26 deg. F	Humidity	Conditions Wind Low (mph): 0.0 - Wind High: 11.5 Dewpoint Low (F): 21.9 - Dewpoint High: 27.0 High Gusts (mph): 0.0
Site Activities Taking forms off			
Materials Delivered			
Materials Removed Wood Forms			
Laboratory and Field Testing Performed			
Meetings/Discussions			
Safety Concerns			
Problem Areas/Additional Comments			

INSPECTOR OR REPRESENTATIVE		
Date 12/12/2016	Typed or Printed Name and Title Khaled Hamad	Signature Khaled Hamad

U.S. Department of Transportation **Federal Aviation Administration**	**Construction Progress and Inspection Report** **NAPMRC**		Inspection Date 12/13/2018 Project Name TO#15_Ref. Crack._Outdoor_Phase 1
Contractor & # of Personnel AE Stone/Feriozzi Labor 3	Contractor & # of Personnel	Contractor & # of Personnel	Contractor & # of Personnel
Equipment On-Site Concrete saw Air blower Hand tools Water tank			
Start Time – 7:00AM Stop Time -4:30PM	Temperature High 49deg. F Low 31deg. F	Humidity	Conditions Wind Low (mph): 0.0 - Wind High: 10.4 Dewpoint Low (F): 27.0 - Dewpoint High: 39.9 High Gusts (mph): 0.0
Site Activities Saw cut the joints Seal the joints as per drawings			
Materials Delivered Joint seal Joint seal epoxy			
Materials Removed Widened the joints			
Laboratory and Field Testing Performed			
Meetings/Discussions			
Safety Concerns			
Problem Areas/Additional Comments			
INSPECTOR OR REPRESENTATIVE			

Date	Typed or Printed Name and Title	Signature
12/13/2016	Khaled Hamad	Khaled Hamad

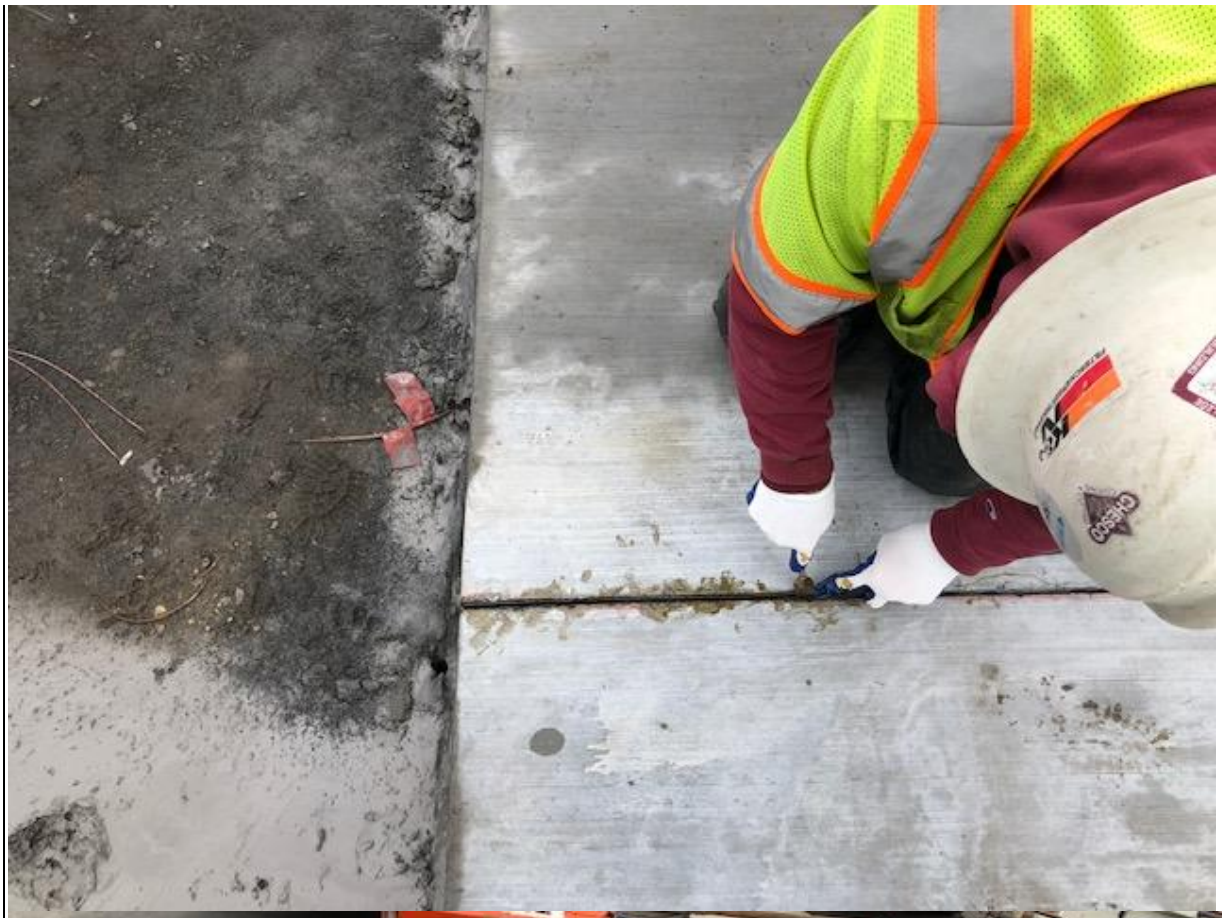

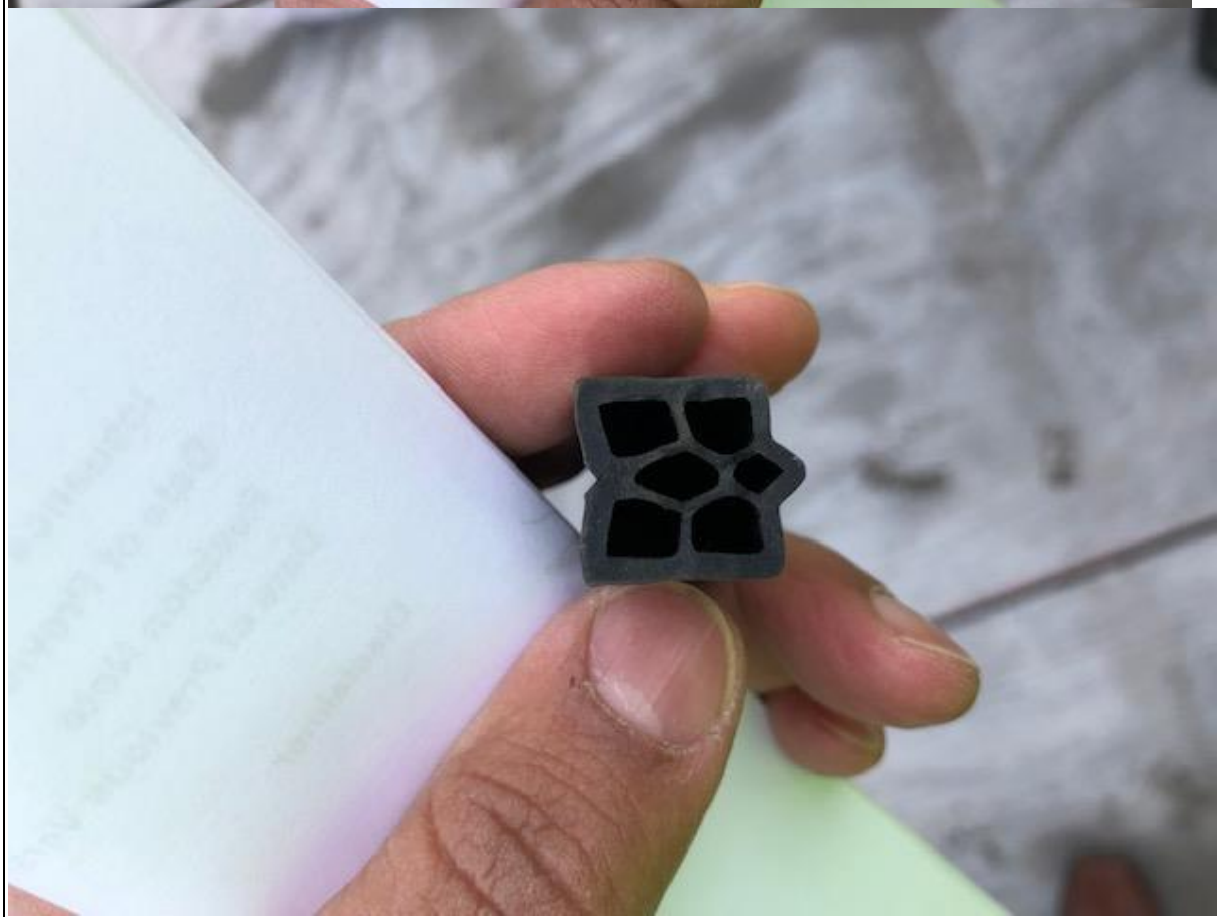

866-CHESCO-1

CHESC

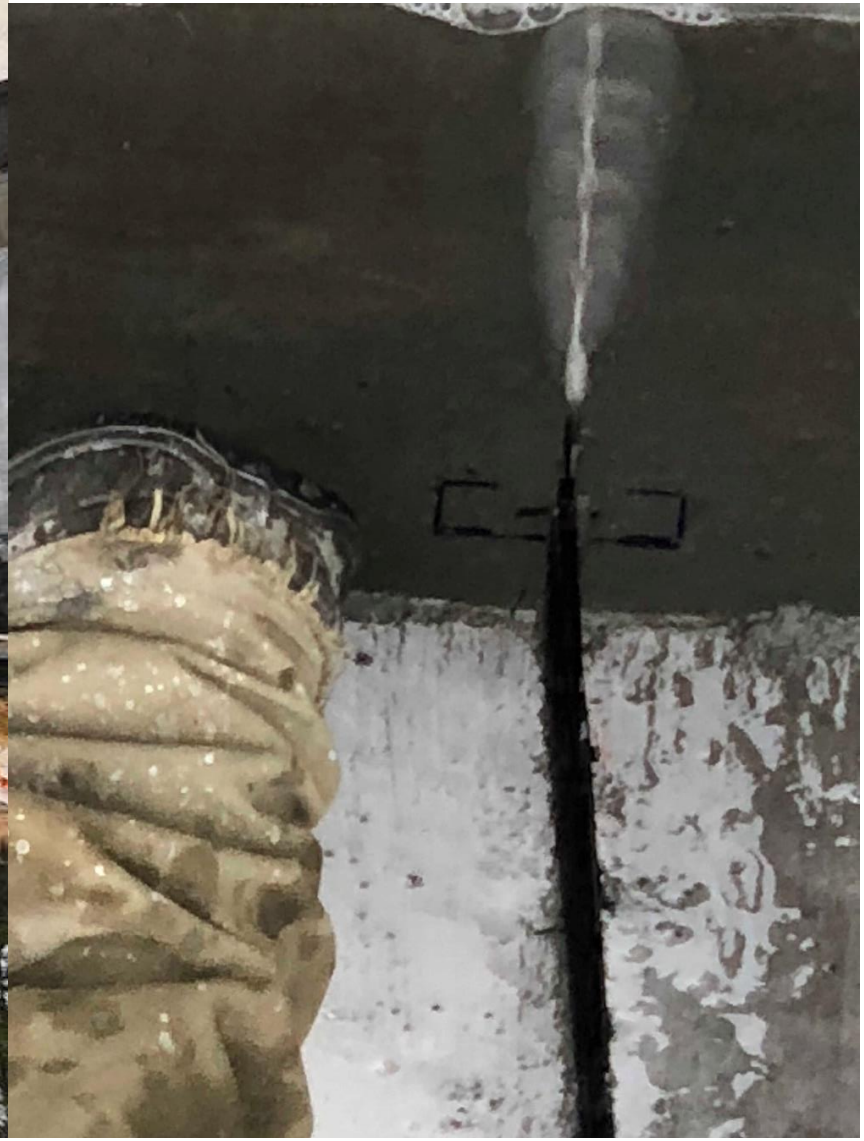

CHESCO

CHESCO
510-869-3994

CHESCO

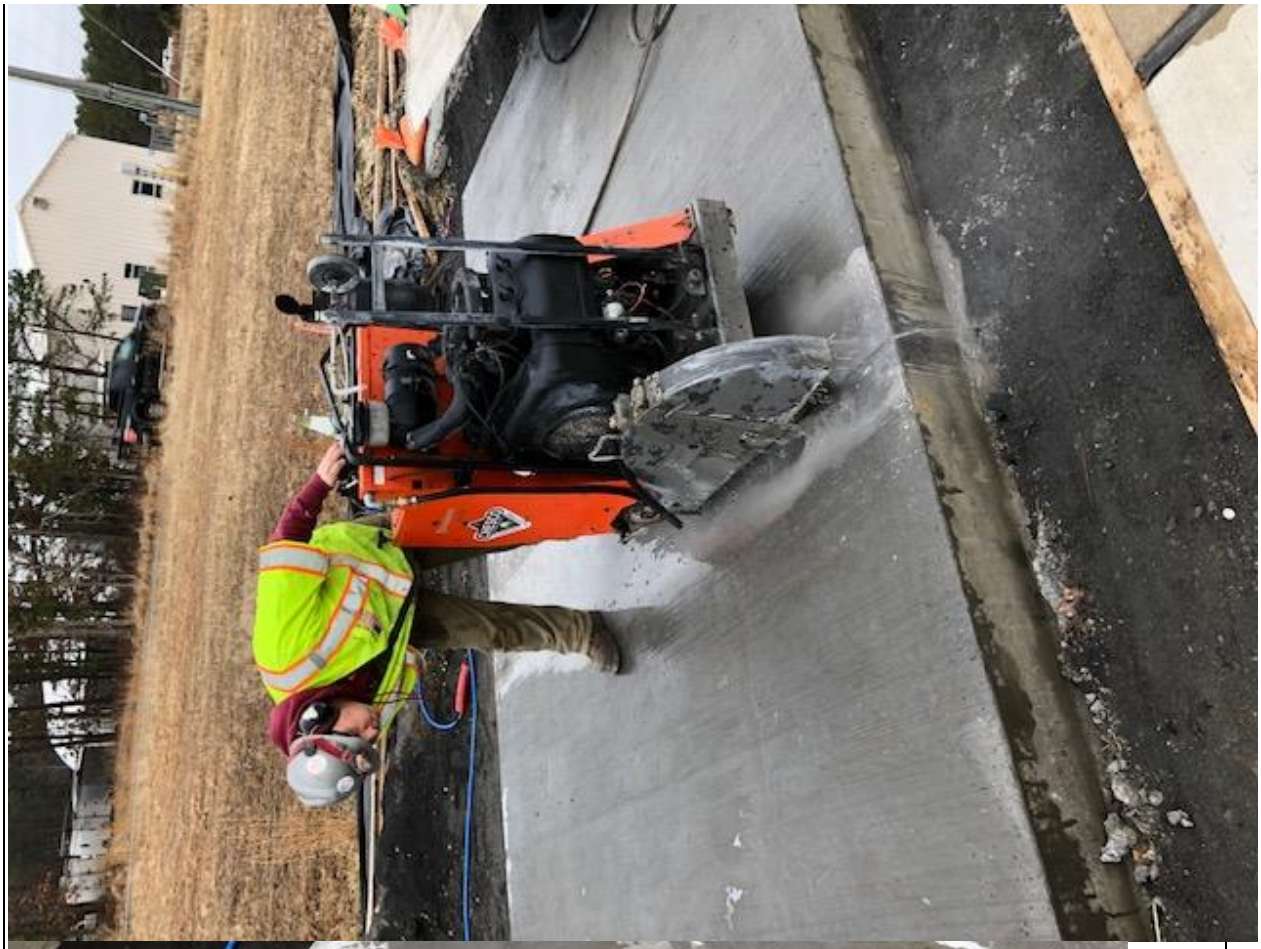

National Airport Pavement & Materials
Research Center

U.S. Department of Transportation **Federal Aviation Administration**	**Construction Progress and Inspection Report** **NAPMRC**		Inspection Date 12-14-2018 Project Name TO# 15_ref. Crack._outdoor_phase 1
Contractor & # of Personnel Gemini/Kubiak 1 Tech.	Contractor & # of Personnel GDIT 3 Labor	Contractor & # of Personnel	Contractor & # of Personnel
Equipment On-Site Hand tools			
Start Time – 7:00AM Stop Time -4:00PM	Temperature High 53 deg F Low 46 deg F	Humidity 89%	Conditions
Site Activities Install conduits			
Materials Delivered 2” conduits Conduits junction boxes Fill material around boxes.			
Materials Removed			
Laboratory and Field Testing Performed			
Meetings/Discussions Preparatory meeting discussing what is he going to do.			
Safety Concerns			
Problem Areas/Additional Comments			

INSPECTOR OR REPRESENTATIVE		
Date 12/14/2018	Typed or Printed Name and Title Khaled Hamad	Signature Khaled Hamad

DEWALT
DEWALT

U.S. Department of Transportation **Federal Aviation Administration**	**Construction Progress and Inspection Report** **NAPMRC**		Inspection Date 12-17-2018 Project Name TO# 15_ref. Crack._outdoor_phase 1
Contractor & # of Personnel Gemini/Kubiak 1 Tech.	Contractor & # of Personnel GDIT 1 Labor	Contractor & # of Personnel	Contractor & # of Personnel
Equipment On-Site Hand tools			
Start Time – 7:00AM Stop Time -4:00PM	Temperature High 50 deg F Low 32 deg F	Humidity 60%	Conditions Cloudy. Wind: 13mph
Site Activities Install conduits (East Side)			
Materials Delivered 2” conduits Conduits junction boxes Fill material around boxes.			
Materials Removed			
Laboratory and Field Testing Performed			
Meetings/Discussions Preparatory meeting discussing what is he going to do.			
Safety Concerns			
Problem Areas/Additional Comments			

INSPECTOR OR REPRESENTATIVE		
Date 12/17/2018	Typed or Printed Name and Title Khaled Hamad	Signature Khaled Hamad

U.S. Department of Transportation **Federal Aviation Administration**	**Construction Progress and Inspection Report** **NAPMRC**		Inspection Date 12/18/2018 Project Name TO#15 Ref. Crack._Outdoor_Phase1
Contractor & # of Personnel	Contractor & # of Personnel	Contractor & # of Personnel	Contractor & # of Personnel
Equipment On-Site			
Start Time – 7:00 AM Stop Time -4:30 PM	Temperature High 43 deg F Low 21 deg. F.	Humidity 44%	Conditions Clear, Wing 13 mph
Site Activities No Activities			
Materials Delivered			
Materials Removed			
Laboratory and Field Testing Performed			
Meetings/Discussions			
Safety Concerns			
Problem Areas/Additional Comments			

INSPECTOR OR REPRESENTATIVE		
Date 12/18/2018	Typed or Printed Name and Title Khaled Hamad	Signature Khaled Hamad

U.S. Department of Transportation **Federal Aviation Administration**	**Construction Progress and Inspection Report** **NAPMRC**		Inspection Date 12/19/2018 Project Name TO#15 Ref. Crack._Outdoor_Phase1
Contractor & # of Personnel	Contractor & # of Personnel	Contractor & # of Personnel	Contractor & # of Personnel
Equipment On-Site			
Start Time – 7:00 AM Stop Time -4:30 PM	Temperature High 45 deg F Low 31 deg. F.	Humidity 43%	Conditions Clear, Wing 6 mph
Site Activities No Activities			
Materials Delivered			
Materials Removed			
Laboratory and Field Testing Performed			
Meetings/Discussions			
Safety Concerns			
Problem Areas/Additional Comments			

INSPECTOR OR REPRESENTATIVE		
Date 12/19/2018	Typed or Printed Name and Title Khaled Hamad	Signature Khaled Hamad

U.S. Department of Transportation **Federal Aviation Administration**	**Construction Progress and Inspection Report** **NAPMRC**		Inspection Date 12/20/2018 Project Name TO#15 Ref. Crack._Outdoor_Phase1
Contractor & # of Personnel	Contractor & # of Personnel	Contractor & # of Personnel	Contractor & # of Personnel
Equipment On-Site			
Start Time – 7:00 AM Stop Time -4:30 PM	Temperature High 59 deg F Low 26 deg. F.	Humidity 100%	Conditions Cloudy afternoon rain High Wind 24 mph
Site Activities No Activities			
Materials Delivered			
Materials Removed			
Laboratory and Field Testing Performed			
Meetings/Discussions			
Safety Concerns			
Problem Areas/Additional Comments			

INSPECTOR OR REPRESENTATIVE		
Date 12/20/2018	Typed or Printed Name and Title Khaled Hamad	Signature Khaled Hamad

U.S. Department of Transportation **Federal Aviation Administration**	**Construction Progress and Inspection Report** **NAPMRC**		Inspection Date 12/21/2018 Project Name TO#15 Ref. Crack._Outdoor_Phase1
Contractor & # of Personnel	Contractor & # of Personnel	Contractor & # of Personnel	Contractor & # of Personnel
Equipment On-Site			
Start Time – 7:00 AM Stop Time -4:30 PM	Temperature High 60deg F Low 52 deg. F.	Humidity 100%	Conditions Rainy
Site Activities No Activities			
Materials Delivered			
Materials Removed			
Laboratory and Field Testing Performed			
Meetings/Discussions			
Safety Concerns			
Problem Areas/Additional Comments			

INSPECTOR OR REPRESENTATIVE		
Date 12/21/2018	Typed or Printed Name and Title Khaled Hamad	Signature Khaled Hamad

U.S. Department of Transportation **Federal Aviation Administration**	**Construction Progress and Inspection Report** **NAPMRC**		Inspection Date 12/22/2018 Project Name TO#15 Ref. Crack._Outdoor_Phase1
Contractor & # of Personnel	Contractor & # of Personnel	Contractor & # of Personnel	Contractor & # of Personnel
Equipment On-Site			
Start Time – 7:00 AM Stop Time -4:30 PM	Temperature High 52 deg F Low 41 deg. F.	Humidity 68%	Conditions High Wind 29 mph
Site Activities No Activities			
Materials Delivered			
Materials Removed			
Laboratory and Field Testing Performed			
Meetings/Discussions			
Safety Concerns			
Problem Areas/Additional Comments			

INSPECTOR OR REPRESENTATIVE		
Date 12/22/2018	Typed or Printed Name and Title Khaled Hamad	Signature Khaled Hamad

U.S. Department of Transportation **Federal Aviation Administration**	**Construction Progress and Inspection Report** **NAPMRC**		Inspection Date 12/23/2018 Project Name TO#15 Ref. Crack._Outdoor_Phase1
Contractor & # of Personnel	Contractor & # of Personnel	Contractor & # of Personnel	Contractor & # of Personnel
Equipment On-Site			
Start Time – 7:00 AM Stop Time -4:30 PM	Temperature High 47 deg F Low 34 deg. F.	Humidity 55%	Conditions High Wind 12 mph
Site Activities No Activities			
Materials Delivered			
Materials Removed			
Laboratory and Field Testing Performed			
Meetings/Discussions			
Safety Concerns			
Problem Areas/Additional Comments			

INSPECTOR OR REPRESENTATIVE		
Date 12/23/2018	Typed or Printed Name and Title Khaled Hamad	Signature Khaled Hamad

U.S. Department of Transportation **Federal Aviation Administration**	**Construction Progress and Inspection Report** **NAPMRC**		Inspection Date 12/24/2018 Project Name TO#15 Ref. Crack._Outdoor_Phase1
Contractor & # of Personnel	Contractor & # of Personnel	Contractor & # of Personnel	Contractor & # of Personnel
Equipment On-Site			
Start Time – 7:00 AM Stop Time -4:30 PM	Temperature High 46 deg F Low 34 deg. F.	Humidity 55%	Conditions High Wind 17 mph
Site Activities No Activities			
Materials Delivered			
Materials Removed			
Laboratory and Field Testing Performed			
Meetings/Discussions			
Safety Concerns			
Problem Areas/Additional Comments			

INSPECTOR OR REPRESENTATIVE		
Date 12/24/2018	Typed or Printed Name and Title Khaled Hamad	Signature Khaled Hamad

U.S. Department of Transportation **Federal Aviation Administration**	**Construction Progress and Inspection Report** **NAPMRC**		Inspection Date 12/25/2018 Project Name TO#15 Ref. Crack._Outdoor_Phase1
Contractor & # of Personnel	Contractor & # of Personnel	Contractor & # of Personnel	Contractor & # of Personnel
Equipment On-Site			
Start Time – 7:00 AM Stop Time -4:30 PM	Temperature High 43 deg F Low 27 deg. F.	Humidity 51%	Conditions High Wind 13 mph
Site Activities No Activities (holiday)			
Materials Delivered			
Materials Removed			
Laboratory and Field Testing Performed			
Meetings/Discussions			
Safety Concerns			
Problem Areas/Additional Comments			

INSPECTOR OR REPRESENTATIVE		
Date 12/25/2018	Typed or Printed Name and Title Khaled Hamad	Signature Khaled Hamad

U.S. Department of Transportation **Federal Aviation Administration**	**Construction Progress and Inspection Report** **NAPMRC**		Inspection Date 12/26/2018 Project Name TO#15 Ref. Crack._Outdoor_Phase1
Contractor & # of Personnel GDIT- 3 personel	Contractor & # of Personnel	Contractor & # of Personnel	Contractor & # of Personnel
Equipment On-Site BoBcat Hand tools Wood Form			
Start Time – 7:00 AM Stop Time -4:30 PM	Temperature High 45 deg F Low 26 deg. F.	Humidity 70%	Conditions High Wind 10 mph

Site Activities

1-Pad constructed for DAQ solar cabinet

-Forms were installed and box was lined with plastic to keep vegetation from growing

- P209 was placed inside of formwork and compacted

- DAQ solar cabinet was placed into position and 10' grounding rod installed next to formwork cabinet ground hooked up

- Site cleanup around the DAQ solar cabinet and the conduit trench in work

2- **Instrumentation for TO 15 Outdoor RC**

- Thermocouple trunk lines pulled through conduit up to DAQ solar cabinet and reconnected. Thermocouples are being monitored through WIFI connection in the instrumentation lab

Materials Delivered

Materials Removed

Laboratory and Field Testing Performed

Meetings/Discussions

Safety Concerns

Problem Areas/Additional Comments		
INSPECTOR OR REPRESENTATIVE		
Date 12/26/2018	Typed or Printed Name and Title Khaled Hamad	Signature *Khaled Hamad*

U.S. Department of Transportation **Federal Aviation Administration**	**Construction Progress and Inspection Report** **NAPMRC**		Inspection Date 12/27/2018 Project Name TO#15 Ref. Crack._Outdoor_Phase1
Contractor & # of Personnel GDIT- 3 labor	Contractor & # of Personnel	Contractor & # of Personnel	Contractor & # of Personnel
Equipment On-Site Hand Tools			
Start Time – 7:00 AM Stop Time -4:30 PM	Temperature High 47 deg F Low 26 deg. F.	Humidity 65%	Conditions High Wind 13 mph
Site Activities Instrumentation and sensor work. Pull lines through conduit All trunk lines for the concrete joint gauges have been pulled from small junction boxes directly to the DAQ solar cabinet and awaiting to be terminated at the cabinet			
Materials Delivered			
Materials Removed			
Laboratory and Field Testing Performed			
Meetings/Discussions			
Safety Concerns			
Problem Areas/Additional Comments			

INSPECTOR OR REPRESENTATIVE		
Date 12/27/2018	Typed or Printed Name and Title Khaled Hamad	Signature Khaled Hamad

U.S. Department of Transportation **Federal Aviation Administration**	**Construction Progress and Inspection Report** **NAPMRC**		Inspection Date 12/28/2018 Project Name TO#15 Ref. Crack._Outdoor_Phase1
Contractor & # of Personnel	Contractor & # of Personnel	Contractor & # of Personnel	Contractor & # of Personnel
Equipment On-Site			
Start Time – 7:00 AM Stop Time -4:30 PM	Temperature High 60 deg F Low 47 deg. F.	Humidity 100%	Conditions Rain High Wind 22 mph
Site Activities No Activities			
Materials Delivered			
Materials Removed			
Laboratory and Field Testing Performed			
Meetings/Discussions			
Safety Concerns			
Problem Areas/Additional Comments			

INSPECTOR OR REPRESENTATIVE		
Date 12/28/2018	Typed or Printed Name and Title Khaled Hamad	Signature Khaled Hamad

U.S. Department of Transportation **Federal Aviation Administration**	**Construction Progress and Inspection Report** **NAPMRC**		Inspection Date 12/29/2018 Project Name TO#15 Ref. Crack._Outdoor_Phase1
Contractor & # of Personnel	Contractor & # of Personnel	Contractor & # of Personnel	Contractor & # of Personnel
Equipment On-Site			
Start Time – 7:00 AM Stop Time -4:30 PM	Temperature High 57 deg F Low 37 deg. F.	Humidity 57%	Conditions High Wind 23 mph
Site Activities No Activities. Saturday			
Materials Delivered			
Materials Removed			
Laboratory and Field Testing Performed			
Meetings/Discussions			
Safety Concerns			
Problem Areas/Additional Comments			

INSPECTOR OR REPRESENTATIVE		
Date 12/29/2018	Typed or Printed Name and Title Khaled Hamad	Signature Khaled Hamad

U.S. Department of Transportation **Federal Aviation Administration**	**Construction Progress and Inspection Report** **NAPMRC**		Inspection Date 12/30/2018 Project Name TO#15 Ref. Crack._Outdoor_Phase1
Contractor & # of Personnel	Contractor & # of Personnel	Contractor & # of Personnel	Contractor & # of Personnel
Equipment On-Site			
Start Time – 7:00 AM Stop Time -4:30 PM	Temperature High 47 deg F Low 32 deg. F.	Humidity 70%	Conditions High Wind 10 mph
Site Activities No Activities. Sunday			
Materials Delivered			
Materials Removed			
Laboratory and Field Testing Performed			
Meetings/Discussions			
Safety Concerns			
Problem Areas/Additional Comments			

INSPECTOR OR REPRESENTATIVE		
Date 12/30/2018	Typed or Printed Name and Title Khaled Hamad	Signature Khaled Hamad

U.S. Department of Transportation **Federal Aviation Administration**	**Construction Progress and Inspection Report** **NAPMRC**		Inspection Date 12/31/2018 Project Name TO#15 Ref. Crack._Outdoor_Phase1
Contractor & # of Personnel GDIT- 3 labor	Contractor & # of Personnel	Contractor & # of Personnel	Contractor & # of Personnel
Equipment On-Site Hand Tools			
Start Time – 7:00 AM Stop Time -4:30 PM	Temperature High 54 deg F Low 29 deg. F.	Humidity 100%	Conditions High Wind 14 mph
Site Activities Instrumentation and sensor work. Pull lines through conduit			
Materials Delivered			
Materials Removed			
Laboratory and Field Testing Performed			
Meetings/Discussions			
Safety Concerns			
Problem Areas/Additional Comments			

INSPECTOR OR REPRESENTATIVE		
Date 12/31/2018	Typed or Printed Name and Title Khaled Hamad	Signature Khaled Hamad

U.S. Department of Transportation **Federal Aviation Administration**	**Construction Progress and Inspection Report** **NAPMRC**		Inspection Date 1/2/2019 Project Name TO#15 Ref. Crack._Outdoor_Phase1
Contractor & # of Personnel GDIT – 2 personel	Contractor & # of Personnel	Contractor & # of Personnel	Contractor & # of Personnel
Equipment On-Site			
Start Time – 7:00 AM Stop Time -4:30 PM	Temperature High 46 deg F Low 33 deg. F.	Humidity 60%	Conditions High Wind 32 mph
Site Activities Instrumentation DAQ work. Connecting lines			
Materials Delivered			
Materials Removed			
Laboratory and Field Testing Performed			
Meetings/Discussions			
Safety Concerns			
Problem Areas/Additional Comments			

INSPECTOR OR REPRESENTATIVE		
Date 1/2/2019	Typed or Printed Name and Title Khaled Hamad	Signature Khaled Hamad

U.S. Department of Transportation **Federal Aviation Administration**	**Construction Progress and Inspection Report** **NAPMRC**		Inspection Date 1/3/2019 Project Name TO#15 Ref. Crack._Outdoor_Phase1
Contractor & # of Personnel GDIT – 3 personel	Contractor & # of Personnel	Contractor & # of Personnel	Contractor & # of Personnel
Equipment On-Site HWD PSPA Hand Tools			
Start Time – 7:00 AM Stop Time -4:30 PM	Temperature High 50 deg F Low 29 deg. F.	Humidity 95	Conditions Cloudy, high wind 18mph
Site Activities *HWD and PSPA testing. *Instrumentation, working at the DAQ			
Materials Delivered			
Materials Removed			
Laboratory and Field Testing Performed			
Meetings/Discussions			
Safety Concerns			
Problem Areas/Additional Comments			

INSPECTOR OR REPRESENTATIVE		
Date 1/3/2019	Typed or Printed Name and Title Khaled Hamad	Signature *Khaled Hamad*

U.S. Department of Transportation **Federal Aviation Administration**	**Construction Progress and Inspection Report** **NAPMRC**		Inspection Date 1/4/2019 Project Name TO#15 Ref. Crack._Outdoor_Phase1
Contractor & # of Personnel GDIT – 2 personel	Contractor & # of Personnel	Contractor & # of Personnel	Contractor & # of Personnel
Equipment On-Site Hand Tools			
Start Time – 7:00 AM Stop Time -4:30 PM	Temperature High 49 deg F Low 42 deg. F.	Humidity 72	Conditions Cloudy, wind SW 8mph
Site Activities *Instrumentation, working at the DAQ			
Materials Delivered			
Materials Removed			
Laboratory and Field Testing Performed			
Meetings/Discussions			
Safety Concerns			
Problem Areas/Additional Comments			

INSPECTOR OR REPRESENTATIVE		
Date 1/4/2019	Typed or Printed Name and Title Khaled Hamad	Signature Khaled Hamad

U.S. Department of Transportation **Federal Aviation Administration**	**Construction Progress and Inspection Report** **NAPMRC**		Inspection Date 1/7/2019 Project Name TO#15 Ref. Crack._Outdoor_Phase1
Contractor & # of Personnel	Contractor & # of Personnel	Contractor & # of Personnel	Contractor & # of Personnel
Equipment On-Site			
Start Time – 7:00 AM Stop Time -4:30 PM	Temperature High 38 deg F Low 31 deg. F.	Humidity 47	Conditions Light snow, wind SE 6mph
Site Activities No Activities			
Materials Delivered			
Materials Removed			
Laboratory and Field Testing Performed			
Meetings/Discussions			
Safety Concerns			
Problem Areas/Additional Comments			

INSPECTOR OR REPRESENTATIVE		
Date 1/7/2019	Typed or Printed Name and Title Khaled Hamad	Signature Khaled Hamad

U.S. Department of Transportation **Federal Aviation Administration**	**Construction Progress and Inspection Report** **NAPMRC**		Inspection Date 1/8/2019 Project Name TO#15 Ref. Crack._Outdoor_Phase1
Contractor & # of Personnel GDIT 2 tech.	Contractor & # of Personnel	Contractor & # of Personnel	Contractor & # of Personnel
Equipment On-Site Hand tools			
Start Time – 9:00 AM Stop Time -4:00 PM	Temperature High 52 deg F Low 40 deg. F.	Humidity 86%	Conditions Cloudy, wind 6mph
Site Activities • Connecting the rigid conduit to the DAQ with the use of flexible conduit • Install and connect all joint displacement gages.			
Materials Delivered			
Materials Removed			
Laboratory and Field Testing Performed			
Meetings/Discussions			
Safety Concerns			
Problem Areas/Additional Comments			

INSPECTOR OR REPRESENTATIVE		
Date 1/8/2019	Typed or Printed Name and Title Khaled Hamad	Signature *Khaled Hamad*

U.S. Department of Transportation **Federal Aviation Administration**	**Construction Progress and Inspection Report** **NAPMRC**		Inspection Date 1/9/2019 Project Name TO#15 Ref. Crack._Outdoor_Phase1
Contractor & # of Personnel GDIT 2 tech.	Contractor & # of Personnel	Contractor & # of Personnel	Contractor & # of Personnel
Equipment On-Site Hand tools			
Start Time – 9:30 AM Stop Time -4:00 PM	Temperature High 48 deg F Low 27 deg. F.	Humidity 41%	Conditions Partly Sunny, wind WNW 29 mph
Site Activities • Trouble shoot sensors. • Seal conduit boxes.			
Materials Delivered			
Materials Removed			
Laboratory and Field Testing Performed			
Meetings/Discussions			
Safety Concerns			
Problem Areas/Additional Comments			
INSPECTOR OR REPRESENTATIVE			
Date 1/9/2019	Typed or Printed Name and Title Khaled Hamad	Signature Khaled Hamad	

U.S. Department of Transportation **Federal Aviation Administration**	**Construction Progress and Inspection Report** **NAPMRC**		Inspection Date 1/11/2019 Project Name TO#15 Ref. Crack._Outdoor_Phase1
Contractor & # of Personnel GDIT 1 tech.	Contractor & # of Personnel Gemini 1 tech	Contractor & # of Personnel	Contractor & # of Personnel
Equipment On-Site Hand tools			
Start Time – 9:00 AM Stop Time -4:00 PM	Temperature High 36 deg F Low 17 deg. F.	Humidity 38%	Conditions Mostly sunny, wind NW 23 mph
Site Activities • Updating the DAQ software • Install the DAQ at the site			
Materials Delivered			
Materials Removed			
Laboratory and Field Testing Performed			
Meetings/Discussions			
Safety Concerns			
Problem Areas/Additional Comments			

INSPECTOR OR REPRESENTATIVE		
Date 1/11/2019	Typed or Printed Name and Title Khaled Hamad	Signature Khaled Hamad

U.S. Department of Transportation **Federal Aviation Administration**	**Construction Progress and Inspection Report** **NAPMRC**		Inspection Date 1/14/2019 Project Name TO#15 Ref. Crack._Outdoor_Phase1
Contractor & # of Personnel	Contractor & # of Personnel Gemini 1 tech	Contractor & # of Personnel	Contractor & # of Personnel
Equipment On-Site			
Start Time – 9:00 AM Stop Time -4:00 PM	Temperature High 34 deg F Low 21 deg. F.	Humidity 38%	Conditions wind 15 mph
Site Activities • No Activities.			
Materials Delivered			
Materials Removed			
Laboratory and Field Testing Performed			
Meetings/Discussions			
Safety Concerns			
Problem Areas/Additional Comments			

INSPECTOR OR REPRESENTATIVE		
Date 1/14/2019	Typed or Printed Name and Title Khaled Hamad	Signature Khaled Hamad

U.S. Department of Transportation **Federal Aviation Administration**	**Construction Progress and Inspection Report** **NAPMRC**		Inspection Date 1/15/2019 Project Name TO#15 Ref. Crack._Outdoor_Phase1
Contractor & # of Personnel	Contractor & # of Personnel	Contractor & # of Personnel	Contractor & # of Personnel
Equipment On-Site			
Start Time – 9:00 AM Stop Time -4:00 PM	Temperature High 39 deg F Low 28 deg. F.	Humidity 61%	Conditions wind 7 mph
Site Activities • No Activities.			
Materials Delivered			
Materials Removed			
Laboratory and Field Testing Performed			
Meetings/Discussions			
Safety Concerns			
Problem Areas/Additional Comments			
INSPECTOR OR REPRESENTATIVE			
Date 1/15/2019	Typed or Printed Name and Title Khaled Hamad	Signature Khaled Hamad	

U.S. Department of Transportation **Federal Aviation Administration**	**Construction Progress and Inspection Report** **NAPMRC**		Inspection Date 1/16/2019 Project Name TO#15 Ref. Crack._Outdoor_Phase1
Contractor & # of Personnel	Contractor & # of Personnel	Contractor & # of Personnel	Contractor & # of Personnel
Equipment On-Site			
Start Time – 9:00 AM Stop Time -4:00 PM	Temperature High 39 deg F Low 26 deg. F.	Humidity 72%	Conditions wind 8 mph
Site Activities • No Activities.			
Materials Delivered			
Materials Removed			
Laboratory and Field Testing Performed			
Meetings/Discussions			
Safety Concerns			
Problem Areas/Additional Comments			
INSPECTOR OR REPRESENTATIVE			
Date 1/16/2019	Typed or Printed Name and Title Khaled Hamad	Signature Khaled Hamad	

U.S. Department of Transportation **Federal Aviation Administration**	**Construction Progress and Inspection Report** **NAPMRC**		Inspection Date 1/17/2019 Project Name TO#15 Ref. Crack._Outdoor_Phase1
Contractor & # of Personnel	Contractor & # of Personnel	Contractor & # of Personnel	Contractor & # of Personnel
Equipment On-Site			
Start Time – 8:00 AM Stop Time -4:00 PM	Temperature High 36 deg F Low 29 deg. F.	Humidity 43%	Conditions wind 10 mph
Site Activities • No Activities.			
Materials Delivered			
Materials Removed			
Laboratory and Field Testing Performed			
Meetings/Discussions			
Safety Concerns			
Problem Areas/Additional Comments			
INSPECTOR OR REPRESENTATIVE			
Date 1/17/2019	Typed or Printed Name and Title Khaled Hamad	Signature Khaled Hamad	

U.S. Department of Transportation **Federal Aviation Administration**	**Construction Progress and Inspection Report** **NAPMRC**		Inspection Date 1/18/2019 Project Name TO#15 Ref. Crack._Outdoor_Phase1
Contractor & # of Personnel	Contractor & # of Personnel	Contractor & # of Personnel	Contractor & # of Personnel
Equipment On-Site			
Start Time – 8:00 AM Stop Time -4:00 PM	Temperature High 45 deg F Low 26 deg. F.	Humidity 48%	Conditions wind 6 mph
Site Activities • No Activities.			
Materials Delivered			
Materials Removed			
Laboratory and Field Testing Performed			
Meetings/Discussions			
Safety Concerns			
Problem Areas/Additional Comments			
INSPECTOR OR REPRESENTATIVE			
Date 1/18/2019	Typed or Printed Name and Title Khaled Hamad	Signature Khaled Hamad	

U.S. Department of Transportation **Federal Aviation Administration**	**Construction Progress and Inspection Report** **NAPMRC**		Inspection Date 1/21/2019 Project Name TO#15 Ref. Crack._Outdoor_Phase1
Contractor & # of Personnel	Contractor & # of Personnel	Contractor & # of Personnel	Contractor & # of Personnel
Equipment On-Site			
Start Time – 8:00 AM Stop Time -4:00 PM	Temperature	Humidity	Conditions
Site Activities • No Activities. HOLIDAY			
Materials Delivered			
Materials Removed			
Laboratory and Field Testing Performed			
Meetings/Discussions			
Safety Concerns			
Problem Areas/Additional Comments			
INSPECTOR OR REPRESENTATIVE			
Date 1/21/2019	Typed or Printed Name and Title Khaled Hamad	Signature Khaled Hamad	

U.S. Department of Transportation **Federal Aviation Administration**	**Construction Progress and Inspection Report** **NAPMRC**		Inspection Date 1/22/2019 Project Name TO#15 Ref. Crack._Outdoor_Phase1
Contractor & # of Personnel	Contractor & # of Personnel	Contractor & # of Personnel	Contractor & # of Personnel
Equipment On-Site			
Start Time – 8:00 AM Stop Time -4:00 PM	Temperature High 32 deg F Low 21 deg. F	Humidity 31%	Conditions Wind nw 9mph
Site Activities • No Activities. COLD WEATHER			
Materials Delivered			
Materials Removed			
Laboratory and Field Testing Performed			
Meetings/Discussions			
Safety Concerns			
Problem Areas/Additional Comments			
INSPECTOR OR REPRESENTATIVE			
Date 1/22/2019	Typed or Printed Name and Title Khaled Hamad	Signature Khaled Hamad	

U.S. Department of Transportation **Federal Aviation Administration**	**Construction Progress and Inspection Report** **NAPMRC**		Inspection Date 1/23/2019 Project Name TO#15 Ref. Crack._Outdoor_Phase1
Contractor & # of Personnel	Contractor & # of Personnel	Contractor & # of Personnel	Contractor & # of Personnel
Equipment On-Site			
Start Time – 8:00 AM Stop Time -4:00 PM	Temperature High 50 deg F Low 47 deg. F	Humidity 68%	Conditions Wind E 10 mph
Site Activities • No Activities. COLD WEATHER			
Materials Delivered			
Materials Removed			
Laboratory and Field Testing Performed			
Meetings/Discussions			
Safety Concerns			
Problem Areas/Additional Comments			
INSPECTOR OR REPRESENTATIVE			
Date 1/23/2019	Typed or Printed Name and Title Khaled Hamad	Signature Khaled Hamad	

U.S. Department of Transportation **Federal Aviation Administration**	**Construction Progress and Inspection Report** **NAPMRC**		Inspection Date 1/24/2019 Project Name TO#15 Ref. Crack._Outdoor_Phase1
Contractor & # of Personnel	Contractor & # of Personnel	Contractor & # of Personnel	Contractor & # of Personnel
Equipment On-Site			
Start Time – 8:00 AM Stop Time -4:00 PM	Temperature	Humidity	Conditions
Site Activities • No Activities. COLD WEATHER			
Materials Delivered			
Materials Removed			
Laboratory and Field Testing Performed			
Meetings/Discussions			
Safety Concerns			
Problem Areas/Additional Comments			
INSPECTOR OR REPRESENTATIVE			
Date 1/24/2019	Typed or Printed Name and Title Khaled Hamad	Signature *Khaled Hamad*	

U.S. Department of Transportation **Federal Aviation Administration**	**Construction Progress and Inspection Report** **NAPMRC**		Inspection Date 1/25/2019 Project Name TO#15 Ref. Crack._Outdoor_Phase1
Contractor & # of Personnel	Contractor & # of Personnel	Contractor & # of Personnel	Contractor & # of Personnel
Equipment On-Site			
Start Time – 8:00 AM Stop Time -4:00 PM	Temperature	Humidity	Conditions
Site Activities • No Activities. COLD WEATHER			
Materials Delivered			
Materials Removed			
Laboratory and Field Testing Performed			
Meetings/Discussions			
Safety Concerns			
Problem Areas/Additional Comments			
INSPECTOR OR REPRESENTATIVE			
Date 1/25/2019	Typed or Printed Name and Title Khaled Hamad	Signature Khaled Hamad	

U.S. Department of Transportation **Federal Aviation Administration**	**Construction Progress and Inspection Report** **NAPMRC**		Inspection Date 1/28/2019 Project Name TO#15 Ref. Crack._Outdoor_Phase1
Contractor & # of Personnel	Contractor & # of Personnel	Contractor & # of Personnel	Contractor & # of Personnel
Equipment On-Site			
Start Time – 8:00 AM Stop Time -4:00 PM	Temperature	Humidity	Conditions
Site Activities • No Activities. COLD WEATHER			
Materials Delivered			
Materials Removed			
Laboratory and Field Testing Performed			
Meetings/Discussions			
Safety Concerns			
Problem Areas/Additional Comments			
INSPECTOR OR REPRESENTATIVE			
Date 1/28/2019	Typed or Printed Name and Title Khaled Hamad	Signature *Khaled Hamad*	

U.S. Department of Transportation **Federal Aviation Administration**	**Construction Progress and Inspection Report** **NAPMRC**		Inspection Date 1/29/2019 Project Name TO#15 Ref. Crack._Outdoor_Phase1
Contractor & # of Personnel	Contractor & # of Personnel	Contractor & # of Personnel	Contractor & # of Personnel
Equipment On-Site			
Start Time – 8:00 AM Stop Time -4:00 PM	Temperature	Humidity	Conditions
Site Activities • No Activities. COLD WEATHER			
Materials Delivered			
Materials Removed			
Laboratory and Field Testing Performed			
Meetings/Discussions			
Safety Concerns			
Problem Areas/Additional Comments			

INSPECTOR OR REPRESENTATIVE		
Date 1/29/2019	Typed or Printed Name and Title Khaled Hamad	Signature Khaled Hamad

U.S. Department of Transportation **Federal Aviation Administration**	**Construction Progress and Inspection Report** **NAPMRC**		Inspection Date 1/30/2019 Project Name TO#15 Ref. Crack._Outdoor_Phase1
Contractor & # of Personnel	Contractor & # of Personnel	Contractor & # of Personnel	Contractor & # of Personnel
Equipment On-Site			
Start Time – 8:00 AM Stop Time -4:00 PM	Temperature	Humidity	Conditions
Site Activities • No Activities. COLD WEATHER			
Materials Delivered			
Materials Removed			
Laboratory and Field Testing Performed			
Meetings/Discussions			
Safety Concerns			
Problem Areas/Additional Comments			
INSPECTOR OR REPRESENTATIVE			
Date 1/30/2019	Typed or Printed Name and Title Khaled Hamad	Signature Khaled Hamad	

U.S. Department of Transportation **Federal Aviation Administration**	**Construction Progress and Inspection Report** **NAPMRC**		Inspection Date 1/31/2019 Project Name TO#15 Ref. Crack._Outdoor_Phase1
Contractor & # of Personnel	Contractor & # of Personnel	Contractor & # of Personnel	Contractor & # of Personnel
Equipment On-Site			
Start Time – 8:00 AM Stop Time -4:00 PM	Temperature	Humidity	Conditions
Site Activities • No Activities. COLD WEATHER			
Materials Delivered			
Materials Removed			
Laboratory and Field Testing Performed			
Meetings/Discussions			
Safety Concerns			
Problem Areas/Additional Comments			

INSPECTOR OR REPRESENTATIVE		
Date 1/31/2019	Typed or Printed Name and Title Khaled Hamad	Signature Khaled Hamad

U.S. Department of Transportation **Federal Aviation Administration**	**Construction Progress and Inspection Report** **NAPMRC**		Inspection Date 02/01/2019 Project Name TO#15 Ref. Crack._Outdoor_Phase1
Contractor & # of Personnel	Contractor & # of Personnel	Contractor & # of Personnel	Contractor & # of Personnel
Equipment On-Site			
Start Time – 8:00 AM Stop Time -4:00 PM	Temperature	Humidity	Conditions
Site Activities • No Activities. COLD WEATHER			
Materials Delivered			
Materials Removed			
Laboratory and Field Testing Performed			
Meetings/Discussions			
Safety Concerns			
Problem Areas/Additional Comments			

INSPECTOR OR REPRESENTATIVE		
Date 02/01/2019	Typed or Printed Name and Title Khaled Hamad	Signature Khaled Hamad

U.S. Department of Transportation **Federal Aviation Administration**	**Construction Progress and Inspection Report** **NAPMRC**		Inspection Date 02/04/2019 Project Name TO#15 Ref. Crack._Outdoor_Phase1
Contractor & # of Personnel	Contractor & # of Personnel	Contractor & # of Personnel	Contractor & # of Personnel
Equipment On-Site			
Start Time – 8:00 AM Stop Time -4:00 PM	Temperature	Humidity	Conditions
Site Activities • No Activities. COLD/Rainy WEATHER			
Materials Delivered			
Materials Removed			
Laboratory and Field Testing Performed			
Meetings/Discussions			
Safety Concerns			
Problem Areas/Additional Comments			
INSPECTOR OR REPRESENTATIVE			
Date 02/04/2019	Typed or Printed Name and Title Khaled Hamad	Signature *Khaled Hamad*	

U.S. Department of Transportation **Federal Aviation Administration**	**Construction Progress and Inspection Report** **NAPMRC**		Inspection Date 02/05/2019 Project Name TO#15 Ref. Crack._Outdoor_Phase1
Contractor & # of Personnel	Contractor & # of Personnel	Contractor & # of Personnel	Contractor & # of Personnel
Equipment On-Site			
Start Time – 8:00 AM Stop Time -4:00 PM	Temperature	Humidity	Conditions
Site Activities • No Activities.			
Materials Delivered			
Materials Removed			
Laboratory and Field Testing Performed			
Meetings/Discussions			
Safety Concerns			
Problem Areas/Additional Comments			
INSPECTOR OR REPRESENTATIVE			
Date 02/05/2019	Typed or Printed Name and Title Khaled Hamad	Signature *Khaled Hamad*	

U.S. Department of Transportation **Federal Aviation Administration**	**Construction Progress and Inspection Report** **NAPMRC**		Inspection Date 02/06/2019 Project Name TO#15 Ref. Crack._Outdoor_Phase1
Contractor & # of Personnel	Contractor & # of Personnel	Contractor & # of Personnel	Contractor & # of Personnel
Equipment On-Site			
Start Time – 8:00 AM Stop Time -4:00 PM	Temperature	Humidity	Conditions
Site Activities • No Activities.			
Materials Delivered			
Materials Removed			
Laboratory and Field Testing Performed			
Meetings/Discussions			
Safety Concerns			
Problem Areas/Additional Comments			
INSPECTOR OR REPRESENTATIVE			
Date 02/06/2019	Typed or Printed Name and Title Khaled Hamad	Signature Khaled Hamad	

U.S. Department of Transportation **Federal Aviation Administration**	**Construction Progress and Inspection Report** **NAPMRC**		Inspection Date 02/07/2019 Project Name TO#15 Ref. Crack._Outdoor_Phase1
Contractor & # of Personnel	Contractor & # of Personnel	Contractor & # of Personnel	Contractor & # of Personnel
Equipment On-Site			
Start Time – 8:00 AM Stop Time -4:00 PM	Temperature	Humidity	Conditions
Site Activities • No Activities.			
Materials Delivered			
Materials Removed			
Laboratory and Field Testing Performed			
Meetings/Discussions			
Safety Concerns			
Problem Areas/Additional Comments			
INSPECTOR OR REPRESENTATIVE			
Date 02/07/2019	Typed or Printed Name and Title Khaled Hamad	Signature Khaled Hamad	

U.S. Department of Transportation **Federal Aviation Administration**	**Construction Progress and Inspection Report** **NAPMRC**		Inspection Date 02/08/2019 Project Name TO#15 Ref. Crack._Outdoor_Phase1
Contractor & # of Personnel	Contractor & # of Personnel	Contractor & # of Personnel	Contractor & # of Personnel
Equipment On-Site			
Start Time – 8:00 AM Stop Time -4:00 PM	Temperature	Humidity	Conditions
Site Activities • No Activities.			
Materials Delivered			
Materials Removed			
Laboratory and Field Testing Performed			
Meetings/Discussions			
Safety Concerns			
Problem Areas/Additional Comments			
INSPECTOR OR REPRESENTATIVE			
Date 02/08/2019	Typed or Printed Name and Title Khaled Hamad	Signature *Khaled Hamad*	

U.S. Department of Transportation **Federal Aviation Administration**	**Construction Progress and Inspection Report** **NAPMRC**		Inspection Date 02/11/2019 Project Name TO#15 Ref. Crack._Outdoor_Phase1
Contractor & # of Personnel	Contractor & # of Personnel	Contractor & # of Personnel	Contractor & # of Personnel
Equipment On-Site			
Start Time – 8:00 AM Stop Time -4:00 PM	Temperature High 36 deg. F. Low 31 deg. F	Humidity 95%	Conditions Snow, NNE wind at 2 mph
Site Activities • No Activities.			
Materials Delivered			
Materials Removed			
Laboratory and Field Testing Performed			
Meetings/Discussions			
Safety Concerns			
Problem Areas/Additional Comments			
INSPECTOR OR REPRESENTATIVE			
Date 02/11/2019	Typed or Printed Name and Title Khaled Hamad	Signature *Khaled Hamad*	

U.S. Department of Transportation **Federal Aviation Administration**	**Construction Progress and Inspection Report** **NAPMRC**		Inspection Date 02/12/2019 Project Name TO#15 Ref. Crack._Outdoor_Phase1
Contractor & # of Personnel	Contractor & # of Personnel	Contractor & # of Personnel	Contractor & # of Personnel
Equipment On-Site			
Start Time – 8:00 AM Stop Time -4:00 PM	Temperature High 45 deg. F. Low 39 deg. F	Humidity 98%	Conditions NE wind at 5 mph
Site Activities • No Activities.			
Materials Delivered			
Materials Removed			
Laboratory and Field Testing Performed			
Meetings/Discussions			
Safety Concerns			
Problem Areas/Additional Comments			
INSPECTOR OR REPRESENTATIVE			
Date 02/12/2019	Typed or Printed Name and Title Khaled Hamad	Signature *Khaled Hamad*	

U.S. Department of Transportation **Federal Aviation Administration**	**Construction Progress and Inspection Report** **NAPMRC**		Inspection Date 02/13/2019 Project Name TO#15 Ref. Crack._Outdoor_Phase1
Contractor & # of Personnel	Contractor & # of Personnel	Contractor & # of Personnel	Contractor & # of Personnel
Equipment On-Site			
Start Time – 8:00 AM Stop Time -4:00 PM	Temperature High 45 deg. F. Low 27 deg. F	Humidity 43%	Conditions W wind at 28 mph
Site Activities • No Activities.			
Materials Delivered			
Materials Removed			
Laboratory and Field Testing Performed			
Meetings/Discussions			
Safety Concerns			
Problem Areas/Additional Comments			
INSPECTOR OR REPRESENTATIVE			
Date 02/13/2019	Typed or Printed Name and Title Khaled Hamad	Signature *Khaled Hamad*	

U.S. Department of Transportation **Federal Aviation Administration**	**Construction Progress and Inspection Report** **NAPMRC**		Inspection Date 02/14/2019 Project Name TO#15 Ref. Crack._Outdoor_Phase1
Contractor & # of Personnel	Contractor & # of Personnel	Contractor & # of Personnel	Contractor & # of Personnel
Equipment On-Site			
Start Time – 8:00 AM Stop Time -4:00 PM	Temperature High 50 deg. F. Low 33 deg. F	Humidity 43%	Conditions SW wind at 15 mph
Site Activities • No Activities.			
Materials Delivered			
Materials Removed			
Laboratory and Field Testing Performed			
Meetings/Discussions			
Safety Concerns			
Problem Areas/Additional Comments			

INSPECTOR OR REPRESENTATIVE		
Date 02/14/2019	Typed or Printed Name and Title Khaled Hamad	Signature *Khaled Hamad*

U.S. Department of Transportation **Federal Aviation Administration**	**Construction Progress and Inspection Report** **NAPMRC**		Inspection Date 02/15/2019 Project Name TO#15 Ref. Crack._Outdoor_Phase1
Contractor & # of Personnel	Contractor & # of Personnel	Contractor & # of Personnel	Contractor & # of Personnel
Equipment On-Site			
Start Time – 8:00 AM Stop Time -4:00 PM	Temperature High 60 deg. F. Low 33 deg. F	Humidity 79%	Conditions SSW wind at 15 mph
Site Activities • No Activities.			
Materials Delivered			
Materials Removed			
Laboratory and Field Testing Performed			
Meetings/Discussions			
Safety Concerns			
Problem Areas/Additional Comments			
INSPECTOR OR REPRESENTATIVE			
Date 02/15/2019	Typed or Printed Name and Title Khaled Hamad	Signature *Khaled Hamad*	

U.S. Department of Transportation **Federal Aviation Administration**	**Construction Progress and Inspection Report** **NAPMRC**		Inspection Date 02/18/2019 Holiday Project Name TO#15 Ref. Crack._Outdoor_Phase1
Contractor & # of Personnel	Contractor & # of Personnel	Contractor & # of Personnel	Contractor & # of Personnel
Equipment On-Site			
Start Time – 8:00 AM Stop Time -4:00 PM	Temperature	Humidity	Conditions
Site Activities • No Activities.			
Materials Delivered			
Materials Removed			
Laboratory and Field Testing Performed			
Meetings/Discussions			
Safety Concerns			
Problem Areas/Additional Comments			
INSPECTOR OR REPRESENTATIVE			
Date 02/18/2019	Typed or Printed Name and Title Khaled Hamad	Signature *Khaled Hamad*	

U.S. Department of Transportation **Federal Aviation Administration**	**Construction Progress and Inspection Report** **NAPMRC**		Inspection Date 02/19/2019 Project Name TO#15 Ref. Crack._Outdoor_Phase1
Contractor & # of Personnel	Contractor & # of Personnel	Contractor & # of Personnel	Contractor & # of Personnel
Equipment On-Site			
Start Time – 8:00 AM Stop Time -4:00 PM	Temperature High 41 deg. F Low 23 deg. F.	Humidity 34%	Conditions NNW at 10 mph
Site Activities • No Activities.			
Materials Delivered			
Materials Removed			
Laboratory and Field Testing Performed			
Meetings/Discussions			
Safety Concerns			
Problem Areas/Additional Comments			

INSPECTOR OR REPRESENTATIVE		
Date 02/19/2019	Typed or Printed Name and Title Khaled Hamad	Signature *Khaled Hamad*

U.S. Department of Transportation **Federal Aviation Administration**	**Construction Progress and Inspection Report** **NAPMRC**		Inspection Date 02/20/2019 Project Name TO#15 Ref. Crack._Outdoor_Phase1
Contractor & # of Personnel	Contractor & # of Personnel	Contractor & # of Personnel	Contractor & # of Personnel
Equipment On-Site			
Start Time – 8:00 AM Stop Time -4:00 PM	Temperature High 33 deg. F Low 32 deg. F.	Humidity 100%	Conditions ESE at 12 mph. Light Snow
Site Activities • No Activities.			
Materials Delivered			
Materials Removed			
Laboratory and Field Testing Performed			
Meetings/Discussions			
Safety Concerns			
Problem Areas/Additional Comments			
INSPECTOR OR REPRESENTATIVE			
Date 02/20/2019	Typed or Printed Name and Title Khaled Hamad	Signature *Khaled Hamad*	

U.S. Department of Transportation **Federal Aviation Administration**	**Construction Progress and Inspection Report** **NAPMRC**		Inspection Date 02/21/2019 Project Name TO#15 Ref. Crack._Outdoor_Phase1
Contractor & # of Personnel	Contractor & # of Personnel	Contractor & # of Personnel	Contractor & # of Personnel
Equipment On-Site			
Start Time – 8:00 AM Stop Time -4:00 PM	Temperature High 52 deg. F Low 36 deg. F.	Humidity 55%	Conditions WNW at 10 mph. Cloudy
Site Activities • No Activities.			
Materials Delivered			
Materials Removed			
Laboratory and Field Testing Performed			
Meetings/Discussions			
Safety Concerns			
Problem Areas/Additional Comments			
INSPECTOR OR REPRESENTATIVE			
Date 02/21/2019	Typed or Printed Name and Title Khaled Hamad	Signature *Khaled Hamad*	

U.S. Department of Transportation **Federal Aviation Administration**	**Construction Progress and Inspection Report** **NAPMRC**		Inspection Date 02/22/2019 Project Name TO#15 Ref. Crack._Outdoor_Phase1
Contractor & # of Personnel	Contractor & # of Personnel	Contractor & # of Personnel	Contractor & # of Personnel
Equipment On-Site			
Start Time – 8:00 AM Stop Time -4:00 PM	Temperature High 47 deg. F Low 30 deg. F.	Humidity 49%	Conditions NNW at 7 mph. Cloudy
Site Activities • No Activities.			
Materials Delivered			
Materials Removed			
Laboratory and Field Testing Performed			
Meetings/Discussions			
Safety Concerns			
Problem Areas/Additional Comments			
INSPECTOR OR REPRESENTATIVE			
Date 02/22/2019	Typed or Printed Name and Title Khaled Hamad	Signature *Khaled Hamad*	

U.S. Department of Transportation **Federal Aviation Administration**	**Construction Progress and Inspection Report** **NAPMRC**		Inspection Date 02/25/2019 Project Name TO#15 Ref. Crack._Outdoor_Phase1
Contractor & # of Personnel	Contractor & # of Personnel	Contractor & # of Personnel	Contractor & # of Personnel
Equipment On-Site			
Start Time – 8:00 AM Stop Time -4:00 PM	Temperature High 43 deg. F Low 30 deg. F.	Humidity 31%	Conditions WNW at 10 mph. Cloudy
Site Activities • No Activities.			
Materials Delivered			
Materials Removed			
Laboratory and Field Testing Performed			
Meetings/Discussions			
Safety Concerns			
Problem Areas/Additional Comments			
INSPECTOR OR REPRESENTATIVE			
Date 02/25/2019	Typed or Printed Name and Title Khaled Hamad	Signature *Khaled Hamad*	

U.S. Department of Transportation **Federal Aviation Administration**	**Construction Progress and Inspection Report** **NAPMRC**		Inspection Date 02/26/2019 Project Name TO#15 Ref. Crack._Outdoor_Phase1
Contractor & # of Personnel	Contractor & # of Personnel	Contractor & # of Personnel	Contractor & # of Personnel
Equipment On-Site			
Start Time – 8:00 AM Stop Time -4:00 PM	Temperature High 43 deg. F Low 23 deg. F.	Humidity 36%	Conditions W at 16 mph. Mostly Sunny
Site Activities • No Activities.			
Materials Delivered			
Materials Removed			
Laboratory and Field Testing Performed			
Meetings/Discussions			
Safety Concerns			
Problem Areas/Additional Comments			
INSPECTOR OR REPRESENTATIVE			
Date 02/26/2019	Typed or Printed Name and Title Khaled Hamad	Signature *Khaled Hamad*	

U.S. Department of Transportation **Federal Aviation Administration**	**Construction Progress and Inspection Report** **NAPMRC**		Inspection Date 02/27/2019 Project Name TO#15 Ref. Crack._Outdoor_Phase1
Contractor & # of Personnel	Contractor & # of Personnel	Contractor & # of Personnel	Contractor & # of Personnel
Equipment On-Site			
Start Time – 8:00 AM Stop Time -4:00 PM	Temperature High 38 deg. F Low 33 deg. F.	Humidity 51%	Conditions E at 12 mph. Mostly cloudy
Site Activities • No Activities.			
Materials Delivered			
Materials Removed			
Laboratory and Field Testing Performed			
Meetings/Discussions			
Safety Concerns			
Problem Areas/Additional Comments			
INSPECTOR OR REPRESENTATIVE			
Date 02/27/2019	Typed or Printed Name and Title Khaled Hamad	Signature *Khaled Hamad*	

U.S. Department of Transportation **Federal Aviation Administration**	**Construction Progress and Inspection Report** **NAPMRC**		Inspection Date 02/28/2019 Project Name TO#15 Ref. Crack._Outdoor_Phase1
Contractor & # of Personnel	Contractor & # of Personnel	Contractor & # of Personnel	Contractor & # of Personnel
Equipment On-Site			
Start Time – 8:00 AM Stop Time -4:00 PM	Temperature High 46 deg. F Low 30 deg. F.	Humidity 25%	Conditions NNW at 10 mph. Mostly cloudy
Site Activities • No Activities.			
Materials Delivered			
Materials Removed			
Laboratory and Field Testing Performed			
Meetings/Discussions			
Safety Concerns			
Problem Areas/Additional Comments			
INSPECTOR OR REPRESENTATIVE			
Date 02/28/2019	Typed or Printed Name and Title Khaled Hamad	Signature *Khaled Hamad*	

U.S. Department of Transportation **Federal Aviation Administration**	**Construction Progress and Inspection Report** **NAPMRC**		Inspection Date 03/01/2019 Project Name TO#15 Ref. Crack._Outdoor_Phase1
Contractor & # of Personnel	Contractor & # of Personnel	Contractor & # of Personnel	Contractor & # of Personnel
Equipment On-Site			
Start Time – 8:00 AM Stop Time -4:00 PM	Temperature High 43 deg. F Low 36 deg. F.	Humidity 59%	Conditions ENE at 9 mph. cloudy
Site Activities • No Activities.			
Materials Delivered			
Materials Removed			
Laboratory and Field Testing Performed			
Meetings/Discussions			
Safety Concerns			
Problem Areas/Additional Comments			
INSPECTOR OR REPRESENTATIVE			
Date 03/01/2019	Typed or Printed Name and Title Khaled Hamad	Signature *Khaled Hamad*	

U.S. Department of Transportation **Federal Aviation Administration**	**Construction Progress and Inspection Report** **NAPMRC**		Inspection Date 03/04/2019 Project Name TO#15 Ref. Crack._Outdoor_Phase1
Contractor & # of Personnel GDIT 1 Tech	Contractor & # of Personnel	Contractor & # of Personnel	Contractor & # of Personnel
Equipment On-Site Sealing Tape			
Start Time – 8:00 AM Stop Time -4:00 PM	Temperature High 41 deg. F Low 27 deg. F.	Humidity 52%	Conditions 13 mph.
Site Activities • Sealing the sensors connector wiring cable. (1 tech. for 3hrs.) • No Activities (5hrs)			
Materials Delivered			
Materials Removed			
Laboratory and Field Testing Performed			
Meetings/Discussions			
Safety Concerns			
Problem Areas/Additional Comments			

INSPECTOR OR REPRESENTATIVE		
Date 03/04/2019	Typed or Printed Name and Title Khaled Hamad	Signature Khaled Hamad

U.S. Department of Transportation **Federal Aviation Administration**	**Construction Progress and Inspection Report** **NAPMRC**		Inspection Date 03/05/2019 Project Name TO#15 Ref. Crack._Outdoor_Phase1
Contractor & # of Personnel GDIT 1 Tech	Contractor & # of Personnel	Contractor & # of Personnel	Contractor & # of Personnel
Equipment On-Site Sealing Tape			
Start Time – 8:00 AM Stop Time -4:00 PM	Temperature High 37 deg. F Low 18 deg. F.	Humidity 33%	Conditions W 15 mph. Sunny
Site Activities • Sealing the sensors connector wiring cable. (1 tech. for 1.5 hrs.) • No Activities (6.5hrs)			
Materials Delivered			
Materials Removed			
Laboratory and Field Testing Performed			
Meetings/Discussions			
Safety Concerns			
Problem Areas/Additional Comments			

INSPECTOR OR REPRESENTATIVE		
Date 03/05/2019	Typed or Printed Name and Title Khaled Hamad	Signature Khaled Hamad

U.S. Department of Transportation **Federal Aviation Administration**	**Construction Progress and Inspection Report** **NAPMRC**		Inspection Date 03/06/2019 Project Name TO#15 Ref. Crack._Outdoor_Phase1
Contractor & # of Personnel	Contractor & # of Personnel	Contractor & # of Personnel	Contractor & # of Personnel
Equipment On-Site Sealing Tape			
Start Time – 8:00 AM Stop Time -4:00 PM	Temperature High 30 deg. F Low 17 deg. F.	Humidity 34%	Conditions NW 20 mph.
Site Activities • No Activities			
Materials Delivered			
Materials Removed			
Laboratory and Field Testing Performed			
Meetings/Discussions			
Safety Concerns			
Problem Areas/Additional Comments			
INSPECTOR OR REPRESENTATIVE			
Date 03/06/2019	Typed or Printed Name and Title Khaled Hamad	Signature *Khaled Hamad*	

U.S. Department of Transportation **Federal Aviation Administration**	**Construction Progress and Inspection Report** **NAPMRC**		Inspection Date 03/07/2019 Project Name TO#15 Ref. Crack._Outdoor_Phase1
Contractor & # of Personnel	Contractor & # of Personnel	Contractor & # of Personnel	Contractor & # of Personnel
Equipment On-Site			
Start Time – 8:00 AM Stop Time -4:00 PM	Temperature High 30 deg. F Low 19 deg. F.	Humidity	Conditions NW 23 mph.
Site Activities • No Activities			
Materials Delivered			
Materials Removed			
Laboratory and Field Testing Performed			
Meetings/Discussions			
Safety Concerns			
Problem Areas/Additional Comments			
INSPECTOR OR REPRESENTATIVE			
Date 03/07/2019	Typed or Printed Name and Title Khaled Hamad	Signature *Khaled Hamad*	

U.S. Department of Transportation **Federal Aviation Administration**	**Construction Progress and Inspection Report** **NAPMRC**		Inspection Date 03/08/2019 Project Name TO#15 Ref. Crack._Outdoor_Phase1
Contractor & # of Personnel	Contractor & # of Personnel	Contractor & # of Personnel	Contractor & # of Personnel
Equipment On-Site			
Start Time – 8:00 AM Stop Time -4:00 PM	Temperature High 41 deg. F Low 20 deg. F.	Humidity	Conditions NW 10 mph.
Site Activities • No Activities			
Materials Delivered			
Materials Removed			
Laboratory and Field Testing Performed			
Meetings/Discussions			
Safety Concerns			
Problem Areas/Additional Comments			
INSPECTOR OR REPRESENTATIVE			
Date 03/08/2019	Typed or Printed Name and Title Khaled Hamad	Signature *Khaled Hamad*	

U.S. Department of Transportation **Federal Aviation Administration**	**Construction Progress and Inspection Report** **NAPMRC**		Inspection Date 03/11/2019 Project Name TO#15 Ref. Crack._Outdoor_Phase1
Contractor & # of Personnel	Contractor & # of Personnel	Contractor & # of Personnel	Contractor & # of Personnel
Equipment On-Site			
Start Time – 8:00 AM Stop Time -4:00 PM	Temperature High 56 deg. F Low 30 deg. F.	Humidity 24%	Conditions WNW 20 mph.
Site Activities • No Activities			
Materials Delivered			
Materials Removed			
Laboratory and Field Testing Performed			
Meetings/Discussions			
Safety Concerns			
Problem Areas/Additional Comments			
INSPECTOR OR REPRESENTATIVE			
Date 03/11/2019	Typed or Printed Name and Title Khaled Hamad	Signature *Khaled Hamad*	

U.S. Department of Transportation **Federal Aviation Administration**	**Construction Progress and Inspection Report** **NAPMRC**		Inspection Date 03/12/2019 Project Name TO#15 Ref. Crack._Outdoor_Phase1
Contractor & # of Personnel	Contractor & # of Personnel	Contractor & # of Personnel	Contractor & # of Personnel
Equipment On-Site			
Start Time – 8:00 AM Stop Time -4:00 PM	Temperature High 47 deg. F Low 39 deg. F.	Humidity 39%	Conditions 19 mph.
Site Activities • No Activities			
Materials Delivered			
Materials Removed			
Laboratory and Field Testing Performed			
Meetings/Discussions			
Safety Concerns			
Problem Areas/Additional Comments			
INSPECTOR OR REPRESENTATIVE			
Date 03/12/2019	Typed or Printed Name and Title Khaled Hamad	Signature *Khaled Hamad*	

U.S. Department of Transportation **Federal Aviation Administration**	**Construction Progress and Inspection Report** **NAPMRC**		Inspection Date 03/13/2019 Project Name TO#15 Ref. Crack._Outdoor_Phase1
Contractor & # of Personnel	Contractor & # of Personnel	Contractor & # of Personnel	Contractor & # of Personnel
Equipment On-Site			
Start Time – 8:00 AM Stop Time -4:00 PM	Temperature High 47 deg. F Low 23 deg. F.	Humidity 46%	Conditions 14 mph.
Site Activities • No Activities			
Materials Delivered			
Materials Removed			
Laboratory and Field Testing Performed			
Meetings/Discussions			
Safety Concerns			
Problem Areas/Additional Comments			
INSPECTOR OR REPRESENTATIVE			
Date 03/13/2019	Typed or Printed Name and Title Khaled Hamad	Signature *Khaled Hamad*	

U.S. Department of Transportation **Federal Aviation Administration**	**Construction Progress and Inspection Report** **NAPMRC**		Inspection Date 03/14/2019 Project Name TO#15 Ref. Crack._Outdoor_Phase1
Contractor & # of Personnel	Contractor & # of Personnel	Contractor & # of Personnel	Contractor & # of Personnel
Equipment On-Site			
Start Time – 8:00 AM Stop Time -4:00 PM	Temperature High 60 deg. F Low 50 deg. F.	Humidity 57%	Conditions S 12 mph.
Site Activities • No Activities			
Materials Delivered			
Materials Removed			
Laboratory and Field Testing Performed			
Meetings/Discussions			
Safety Concerns			
Problem Areas/Additional Comments			
INSPECTOR OR REPRESENTATIVE			
Date 03/14/2019	Typed or Printed Name and Title Khaled Hamad	Signature *Khaled Hamad*	

U.S. Department of Transportation **Federal Aviation Administration**	**Construction Progress and Inspection Report** **NAPMRC**		Inspection Date 03/18/2019 Project Name TO#15 Ref. Crack._Outdoor_Phase1
Contractor & # of Personnel	Contractor & # of Personnel	Contractor & # of Personnel	Contractor & # of Personnel
Equipment On-Site			
Start Time – 8:00 AM Stop Time -4:00 PM	Temperature High 44 deg. F Low 24 deg. F.	Humidity 50%	Conditions 9 mph.
Site Activities • No Activities			
Materials Delivered			
Materials Removed			
Laboratory and Field Testing Performed			
Meetings/Discussions			
Safety Concerns			
Problem Areas/Additional Comments			
INSPECTOR OR REPRESENTATIVE			
Date 03/18/2019	Typed or Printed Name and Title Khaled Hamad	Signature *Khaled Hamad*	

U.S. Department of Transportation **Federal Aviation Administration**	**Construction Progress and Inspection Report** **NAPMRC**		Inspection Date 03/19/2019 Project Name TO#15 Ref. Crack._Outdoor_Phase1
Contractor & # of Personnel	Contractor & # of Personnel	Contractor & # of Personnel	Contractor & # of Personnel
Equipment On-Site			
Start Time – 8:00 AM Stop Time -4:00 PM	Temperature High 48 deg. F Low 27 deg. F.	Humidity 34%	Conditions 13 mph.
Site Activities • No Activities			
Materials Delivered			
Materials Removed			
Laboratory and Field Testing Performed			
Meetings/Discussions			
Safety Concerns			
Problem Areas/Additional Comments			
INSPECTOR OR REPRESENTATIVE			
Date 03/19/2019	Typed or Printed Name and Title Khaled Hamad	Signature *Khaled Hamad*	

U.S. Department of Transportation **Federal Aviation Administration**	**Construction Progress and Inspection Report** **NAPMRC**		Inspection Date 03/20/2019 Project Name TO#15 Ref. Crack._Outdoor_Phase1
Contractor & # of Personnel	Contractor & # of Personnel	Contractor & # of Personnel	Contractor & # of Personnel
Equipment On-Site			
Start Time – 8:00 AM Stop Time -4:00 PM	Temperature High 51 deg. F Low 23 deg. F.	Humidity 35%	Conditions 15 mph.
Site Activities • No Activities			
Materials Delivered			
Materials Removed			
Laboratory and Field Testing Performed			
Meetings/Discussions			
Safety Concerns			
Problem Areas/Additional Comments			
INSPECTOR OR REPRESENTATIVE			
Date 03/20/2019	Typed or Printed Name and Title Khaled Hamad	Signature *Khaled Hamad*	

U.S. Department of Transportation **Federal Aviation Administration**	**Construction Progress and Inspection Report** **NAPMRC**		Inspection Date 03/21/2019 Project Name TO#15 Ref. Crack._Outdoor_Phase1
Contractor & # of Personnel	Contractor & # of Personnel	Contractor & # of Personnel	Contractor & # of Personnel
Equipment On-Site			
Start Time – 8:00 AM Stop Time -4:00 PM	Temperature High 51 deg. F Low 44 deg. F.	Humidity 93%	Conditions 31 mph.
Site Activities • No Activities			
Materials Delivered			
Materials Removed			
Laboratory and Field Testing Performed			
Meetings/Discussions			
Safety Concerns			
Problem Areas/Additional Comments			
INSPECTOR OR REPRESENTATIVE			
Date 03/21/2019	Typed or Printed Name and Title Khaled Hamad	Signature *Khaled Hamad*	

U.S. Department of Transportation **Federal Aviation Administration**	**Construction Progress and Inspection Report** **NAPMRC**		Inspection Date 03/22/2019 Project Name TO#15 Ref. Crack._Outdoor_Phase1
Contractor & # of Personnel	Contractor & # of Personnel	Contractor & # of Personnel	Contractor & # of Personnel
Equipment On-Site			
Start Time – 8:00 AM Stop Time -4:00 PM	Temperature High 51 deg. F Low 40 deg. F.	Humidity 96%	Conditions 28 mph.
Site Activities • No Activities			
Materials Delivered			
Materials Removed			
Laboratory and Field Testing Performed			
Meetings/Discussions			
Safety Concerns			
Problem Areas/Additional Comments			
INSPECTOR OR REPRESENTATIVE			
Date 03/22/2019	Typed or Printed Name and Title Khaled Hamad	Signature *Khaled Hamad*	

U.S. Department of Transportation **Federal Aviation Administration**	**Construction Progress and Inspection Report** **NAPMRC**		Inspection Date 03/25/2019 Project Name TO#15 Ref. Crack._Outdoor_Phase1
Contractor & # of Personnel GDIT-2 labor	Contractor & # of Personnel AE Stone-1 Forman, 2 Labor	Contractor & # of Personnel	Contractor & # of Personnel
Equipment On-Site • Hand tools • Plate compactor			
Start Time – 8:00 AM Stop Time -4:00 PM	Temperature High 61 deg. F Low 31 deg. F.	Humidity 41%	Conditions ENE 13 mph.
Site Activities • GDIT Labor (1.5 hrs.): 1. Cover the conduit with P-154 • AE Stone(3.5hrs): 1. Made sure that the +/-1” P-154 is covering the conduit 2. Compacted the P-154 on top the conduit 3. Installed a new silt fence 4. Established the swale limits 5. Marked the existing thermo-couples			
Materials Delivered Silt Fence			
Materials Removed NA			
Laboratory and Field Testing Performed NA			
Meetings/Discussions Discussed the work Plan for the shoulder work.			
Safety Concerns NA			

Problem Areas/Additional Comments NA		
INSPECTOR OR REPRESENTATIVE		
Date 03/25/2019	Typed or Printed Name and Title Khaled Hamad	Signature *Khaled Hamad*

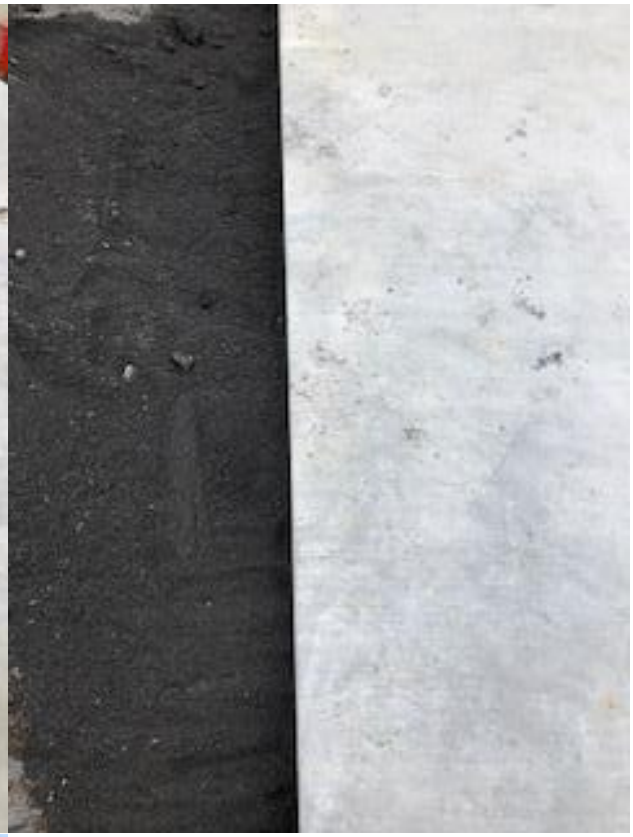

U.S. Department of Transportation **Federal Aviation Administration**	**Construction Progress and Inspection Report** **NAPMRC**		Inspection Date 03/26/2019 Project Name TO#15 Ref. Crack._Outdoor_Phase1
Contractor & # of Personnel	Contractor & # of Personnel	Contractor & # of Personnel	Contractor & # of Personnel
Equipment On-Site			
Start Time – 8:00 AM Stop Time -4:00 PM	Temperature High 46 deg. F Low 26 deg. F.	Humidity 26%	Conditions NNE 15 mph.
Site Activities • No Activities			
Materials Delivered			
Materials Removed			
Laboratory and Field Testing Performed			
Meetings/Discussions			
Safety Concerns			
Problem Areas/Additional Comments			
INSPECTOR OR REPRESENTATIVE			
Date 03/26/2019	Typed or Printed Name and Title Khaled Hamad	Signature *Khaled Hamad*	

U.S. Department of Transportation **Federal Aviation Administration**	**Construction Progress and Inspection Report** **NAPMRC**		Inspection Date 03/27/2019 Project Name TO#15 Ref. Crack._Outdoor_Phase1
Contractor & # of Personnel	Contractor & # of Personnel	Contractor & # of Personnel	Contractor & # of Personnel
Equipment On-Site			
Start Time – 8:00 AM Stop Time -4:00 PM	Temperature High 46 deg. F Low 25 deg. F.	Humidity 43%	Conditions 14 mph.
Site Activities • No Activities			
Materials Delivered			
Materials Removed			
Laboratory and Field Testing Performed			
Meetings/Discussions			
Safety Concerns			
Problem Areas/Additional Comments			
INSPECTOR OR REPRESENTATIVE			
Date 03/27/2019	Typed or Printed Name and Title Khaled Hamad	Signature *Khaled Hamad*	

U.S. Department of Transportation **Federal Aviation Administration**	**Construction Progress and Inspection Report** **NAPMRC**		Inspection Date 03/28/2019 Project Name TO#15 Ref. Crack._Outdoor_Phase1
Contractor & # of Personnel	Contractor & # of Personnel	Contractor & # of Personnel	Contractor & # of Personnel
Equipment On-Site			
Start Time – 8:00 AM Stop Time -4:00 PM	Temperature High 51 deg. F Low 24 deg. F.	Humidity 43%	Conditions 13 mph.
Site Activities • No Activities			
Materials Delivered			
Materials Removed			
Laboratory and Field Testing Performed			
Meetings/Discussions			
Safety Concerns			
Problem Areas/Additional Comments			
INSPECTOR OR REPRESENTATIVE			
Date 03/28/2019	Typed or Printed Name and Title Khaled Hamad	Signature *Khaled Hamad*	

U.S. Department of Transportation **Federal Aviation Administration**	**Construction Progress and Inspection Report** **NAPMRC**		Inspection Date 03/29/2019 Project Name TO#15 Ref. Crack._Outdoor_Phase1
Contractor & # of Personnel	Contractor & # of Personnel	Contractor & # of Personnel	Contractor & # of Personnel
Equipment On-Site			
Start Time – 8:00 AM Stop Time -4:00 PM	Temperature High 64 deg. F Low 49 deg. F.	Humidity 53%	Conditions 15 mph.
Site Activities • No Activities			
Materials Delivered			
Materials Removed			
Laboratory and Field Testing Performed			
Meetings/Discussions			
Safety Concerns			
Problem Areas/Additional Comments			
INSPECTOR OR REPRESENTATIVE			
Date 03/29/2019	Typed or Printed Name and Title Khaled Hamad	Signature *Khaled Hamad*	

U.S. Department of Transportation **Federal Aviation Administration**	**Construction Progress and Inspection Report** **NAPMRC**		Inspection Date 04/01/2019 Project Name TO#15 Ref. Crack._Outdoor_Phase1
Contractor & # of Personnel	Contractor & # of Personnel	Contractor & # of Personnel	Contractor & # of Personnel
Equipment On-Site			
Start Time – 8:00 AM Stop Time -4:00 PM	Temperature High 48 deg. F Low 30 deg. F.	Humidity 37%	Conditions 21 mph.
Site Activities • No Activities			
Materials Delivered			
Materials Removed			
Laboratory and Field Testing Performed			
Meetings/Discussions			
Safety Concerns			
Problem Areas/Additional Comments			

INSPECTOR OR REPRESENTATIVE		
Date 04/01/2019	Typed or Printed Name and Title Khaled Hamad	Signature *Khaled Hamad*

U.S. Department of Transportation **Federal Aviation Administration**	**Construction Progress and Inspection Report** **NAPMRC**		Inspection Date 04/02/2019 Project Name TO#15 Ref. Crack._Outdoor_Phase1
Contractor & # of Personnel	Contractor & # of Personnel	Contractor & # of Personnel	Contractor & # of Personnel
Equipment On-Site			
Start Time – 8:00 AM Stop Time -4:00 PM	Temperature High 49 deg. F Low 37 deg. F.	Humidity 60%	Conditions E @ 17 mph.
Site Activities • No Activities			
Materials Delivered			
Materials Removed			
Laboratory and Field Testing Performed			
Meetings/Discussions			
Safety Concerns			
Problem Areas/Additional Comments			
INSPECTOR OR REPRESENTATIVE			
Date 04/02/2019	Typed or Printed Name and Title Khaled Hamad	Signature *Khaled Hamad*	

U.S. Department of Transportation **Federal Aviation Administration**	**Construction Progress and Inspection Report** **NAPMRC**		Inspection Date 04/03/2019 Project Name TO#15 Ref. Crack._Outdoor_Phase1
Contractor & # of Personnel	Contractor & # of Personnel	Contractor & # of Personnel	Contractor & # of Personnel
Equipment On-Site			
Start Time – 8:00 AM Stop Time -4:00 PM	Temperature High 49 deg. F Low 37 deg. F.	Humidity 60%	Conditions E @ 17 mph.
Site Activities • No Activities			
Materials Delivered • P-209 was delivered to the project site. It was stored to the south of the slab at the project site, since there is an electric cable running above ground to 207 material processing building and no vehicles are to run it over. • 58.32 tons submitted as per attached tickets			
Materials Removed			
Laboratory and Field Testing Performed			
Meetings/Discussions			
Safety Concerns			
Problem Areas/Additional Comments			

INSPECTOR OR REPRESENTATIVE		
Date 04/03/2019	Typed or Printed Name and Title Khaled Hamad	Signature *Khaled Hamad*

A.E. STONE, INC.

ASPHALT PAVING and MATERIAL SUPPLY
N.J.D.E.P. RECYCLING FACILITY NO. 0119001194

1435 DOUGHTY ROAD
EGG HARBOR TOWNSHIP, NJ 08234
641-2781

NAPA
NATIONAL ASPHALT PAVEMENT ASSOCIATION

URBAN ENTERPRISE ZONE PERMIT #7433
SOUTH JERSEY'S RECYCLING CENTER FOR SOURCE SEPARATED ASPHALT, CONCRETE, BRICK AND BLOCK
INCOMING RECYCLABLE MATERIALS RECEIPT FORM

Joe Stephenson

*** Delivery ***

Date:04/03/19 06:40 PLANT:RE Phase:0 Ticket #:170054

SOLD TO
AES
AE STONE, IN
1435 DOUGHTY ROAD
EGG HARBOR TOWNSHIP, NJ
PO:

Job: 1836
FAA
AC AIRPORT
,
Zone: 00

Truck #
DP502
License
PICKUP

PRODUCT	LOADS	TONS	GROSS	TARE	NET
P209	1	29.600	43.250 TN	13.650*TN	29.600 TN
P209 STONE			86500 lb	27300*lb	59200 lb
NJDOT Serial #:				* = Manual Weight	

I hereby certify that the material delivered to A. E. Stone, Inc. for recycling does not originate from a project site that is under the supervision of the New Jersey Department of Environmental Protection – Site Remediation and Waste Management Programs.

Initials: _____

PA315065

Arrive On Job: Depart Job:

WEIGHMASTER JOE KANE NO2403

I CERTIFY THAT ALL ABOVE INFORMATION IS TRUE AND CORRECT.

SEAN GIBBINS JR.
PRINTED NAME

A.E. STONE, INC.

ASPHALT PAVING and MATERIAL SUPPLY
N.J.D.E.P. RECYCLING FACILITY NO. 0119001194

1435 DOUGHTY ROAD
EGG HARBOR TOWNSHIP, NJ 08234
641-2781

NAPA
NATIONAL ASPHALT PAVEMENT ASSOCIATION

URBAN ENTERPRISE ZONE PERMIT #7433
SOUTH JERSEY'S RECYCLING CENTER FOR SOURCE SEPARATED ASPHALT, CONCRETE, BRICK AND BLOCK
INCOMING RECYCLABLE MATERIALS RECEIPT FORM

Joe Stathersen

*** Delivery ***

Date:04/03/19 06:45 PLANT:RE Phase:0 Ticket #:170056

SOLD TO
AES
AE STONE, IN
1435 DOUGHTY ROAD
EGG HARBOR TOWNSHIP, NJ
PO:

Job: 1836
FAA
AC AIRPORT
,
Zone: 00

Truck #
DP505
License
PICKUP

PRODUCT	LOADS	TONS	GROSS	TARE	NET
P209	2	58.320	42.550 TN	13.830*TN	28.720 TN
P209 STONE			85100 lb	27660*lb	57440 lb
NJDOT Serial #:				* = Manual Weight	

I hereby certify that the material delivered to A. E. Stone, Inc. for recycling does not originate from a project site that is under the supervision of the New Jersey Department of Environmental Protection – Site Remediation and Waste Management Programs.

Initials: _____

PA315085

Arrive On Job: Depart Job:

WEIGHMASTER JOE KANE MOZAMAN

I CERTIFY THAT ALL ABOVE INFORMATION IS TRUE AND CORRECT.

Rick Rally

PRINTED NAME

U.S. Department of Transportation **Federal Aviation Administration**	**Construction Progress and Inspection Report** **NAPMRC**		Inspection Date 04/04/2019 Project Name TO#15 Ref. Crack._Outdoor_Phase1
Contractor & # of Personnel AE Stone 1 Forman, 2 labor, 1 surveyor	Contractor & # of Personnel GDIT 2 tech.	Contractor & # of Personnel	Contractor & # of Personnel
Equipment On-Site AE Stone 1) Backhoe 2) Plate compacter 3) Hand Tools GDIT 1) Concrete saw 2) Hand tools			
AE Stone Start Time – 7:00 AM Stop Time -3:00 PM GDIT Start Time – 1:00 PM Stop Time -4:00 PM	Temperature High 65 deg. F Low 38 deg. F.	Humidity 24%	Conditions NNW @ 8 mph.

Site Activities

- AE Stone
  1) Removed the dirt that was to the west of concrete slab
  2) Graded the shoulder edge to the west of slab
  3) Placed P-209 all around the concrete slab, and made sure it 3” below the edge of concrete.
- GDIT

  Working on Wil’s joint sensor as follow:
  1) Removed the joint seal 1ft on each side of the center line
  2) Deepened the joint to an average of 3”

Materials Delivered

NA

Materials Removed

Dirt mount (mixture of dirt and P-154) to the west of the concrete slab

Laboratory and Field Testing Performed

Field density on the P-209 to be done tomorrow morning(4/5/2019). Target field density is 90%.

Meetings/Discussions Project manager went over the P-209 means and methods with the crew.
Safety Concerns The PM. Reminded the crew that it is warming up and the ticks are out. To make sure to have tick spray on and be aware of the surroundings in General. In case of emergency they were reminded to dial 911, and the address is building 296 R&D
Problem Areas/Additional Comments NA

INSPECTOR OR REPRESENTATIVE		
Date 04/04/2019	Typed or Printed Name and Title Khaled Hamad	Signature Khaled Hamad

STA 427.5

CASE

CASE

CASE

CASE

CASE

U.S. Department of Transportation **Federal Aviation Administration**	**Construction Progress and Inspection Report** **NAPMRC**		Inspection Date 04/05/2019 Project Name TO#15 Ref. Crack._Outdoor_Phase1
Contractor & # of Personnel AE Stone P209:1 Forman, 2 labor, Survey: 2 surveyors 9.5M64 Asphalt: 1 Forman, 5 Labors	Contractor & # of Personnel GDIT 2 tech.	Contractor & # of Personnel	Contractor & # of Personnel
Equipment On-Site AE Stone 1) Backhoe 2) Plate compacter 3) Hand Tools 4) Survey Equipment GDIT 1) Concrete saw 2) Hand tools			
AE Stone Start Time – 7:00 AM Stop Time -2:00 PM GDIT Start Time – 9:00 AM Stop Time -4:00 PM	Temperature High 49 deg. F Low 45 deg. F.	Humidity 73%	Conditions Cloudy E @ 8 mph.

Site Activities

- AE Stone
  - i. P209: watered the P-209 to bring the moisture content to optimum (5.4%+-2%), and have Craig testing run field density(Nuclear Field Density) the goal is 90%
  - ii. 9.5M64 Asphalt was installed all around the concrete slab, and the fiel density was tested by Craig testing (Nuclear Field Density) the goal is 90%
- GDIT

  Working on Wil's joint sensor as follow:
  1) Installed Wil's sensor in the joint and ran wiring to the edge boxes
  2) Sealing the joints as they go.

Materials Delivered

Asphalt HMA9.5M64 (24.89 ton)

Materials Removed

NA

Laboratory and Field Testing Performed

Field density on the P-209 and HMA 9.5M64. Target field density is 90%. For both

Meetings/Discussions Project manager went over the Shoulder means and methods with the crew.		
Safety Concerns The PM. Own their 20 ft. In case of emergency dial 911 and the address is building 296 R&D		
Problem Areas/Additional Comments NA		
INSPECTOR OR REPRESENTATIVE		
Date 04/05/2019	Typed or Printed Name and Title Khaled Hamad	Signature Khaled Hamad

A.E. STONE, INC.

ASPHALT PAVING and MATERIAL SUPPLY
N.J.D.E.P. RECYCLING FACILITY NO. 0119001194

1435 DOUGHTY ROAD
EGG HARBOR TOWNSHIP, NJ 08234
641-2781

NAPA
NATIONAL ASPHALT PAVEMENT ASSOCIATION

URBAN ENTERPRISE ZONE PERMIT #7433
SOUTH JERSEY'S RECYCLING CENTER FOR SOURCE SEPARATED ASPHALT, CONCRETE, BRICK AND BLOCK
INCOMING RECYCLABLE MATERIALS RECEIPT FORM

*** Silo B Loadout ***

Date:04/05/19 09:14 PLANT:DP Phase:0 Ticket #:184529

SOLD TO AES
A.E. STONE
1435 DOUGHTY ROAD
EGG HARBOR TOWNSHIP, NJ
PO:

Job: 1812
CSRA-FAA CRACK TEST
Zone: 00 - 298

Truck # D506
License
PICKUP

PRODUCT	LOADS	TONS	GROSS	TARE	NET
HM22	1	24.890	39.430 TN	14.540 TN	24.890 TN
HMA9.5M64			78860 lb	29080 lb	49780 lb
NJDOT Serial #:S02DS0500					

Arrive On Job:
Depart Job:

ED HAGAMAN
WEIGHMASTER

I CERTIFY THAT ALL ABOVE INFORMATION IS TRUE AND CORRECT.

PRINTED NAME

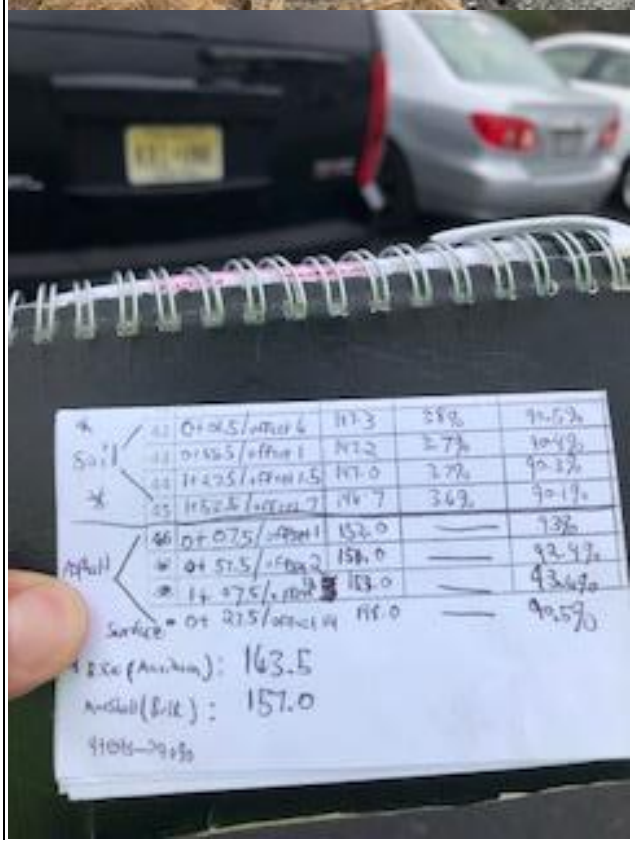
Soil
Asphalt
Surface
163.5
157.0

U.S. Department of Transportation **Federal Aviation Administration**	**Construction Progress and Inspection Report** **NAPMRC**		Inspection Date 04/08/2019 Project Name TO#15 Ref. Crack._Outdoor_Phase1
Contractor & # of Personnel	Contractor & # of Personnel GDIT 2 tech.	Contractor & # of Personnel	Contractor & # of Personnel
Equipment On-Site 1) Hand tools			
GDIT Start Time – 8:00 AM Stop Time -4:00 PM (one tech 8hrs, second tech 4 hrs)	Temperature High 81 deg. F Low 57 deg. F.	Humidity 45%	Conditions Mostly Cloudy W @ 13 mph.
Site Activities Working on Wil's joint sensor as follow: 1) Connecting and wiring Wil's sensor			
Materials Delivered NA			
Materials Removed NA			
Laboratory and Field Testing Performed NA			
Meetings/Discussions NA			
Safety Concerns NA			
Problem Areas/Additional Comments NA			

INSPECTOR OR REPRESENTATIVE		
Date 04/08/2019	Typed or Printed Name and Title Khaled Hamad	Signature Khaled Hamad

U.S. Department of Transportation **Federal Aviation Administration**	**Construction Progress and Inspection Report** **NAPMRC**		Inspection Date 04/09/2019 Project Name TO#15 Ref. Crack._Outdoor_Phase1
Contractor & # of Personnel	Contractor & # of Personnel GDIT 2 tech.	Contractor & # of Personnel	Contractor & # of Personnel
Equipment On-Site 1) Hand tools 2) Concrete saw			
GDIT Start Time – 8:00 AM Stop Time -4:00 PM	Temperature High 58 deg. F Low 44 deg. F.	Humidity 89%	Conditions Cloudy ESE @ 9.0 mph.
Site Activities Working on embedded sensor as follow: 1) Establishing how it is connected to the electric box. 2ft away from the joint.			
Materials Delivered ½" metal conduit			
Materials Removed NA			
Laboratory and Field Testing Performed NA			
Meetings/Discussions NA			
Safety Concerns NA			
Problem Areas/Additional Comments NA			

INSPECTOR OR REPRESENTATIVE		
Date 04/09/2019	Typed or Printed Name and Title Khaled Hamad	Signature Khaled Hamad

U.S. Department of Transportation **Federal Aviation Administration**	**Construction Progress and Inspection Report** **NAPMRC**		Inspection Date 04/10/2019 Project Name TO#15 Ref. Crack._Outdoor_Phase1
Contractor & # of Personnel	Contractor & # of Personnel GDIT 2 tech.	Contractor & # of Personnel	Contractor & # of Personnel
Equipment On-Site 1) Hand tools 2) Embedded Sensor template			
GDIT Start Time – 8:00 AM Stop Time -4:00 PM	Temperature High 67 deg. F Low 37 deg. F.	Humidity 32%	Conditions Cloudy WNW @ 14.0 mph.
Site Activities Working on embedded sensor as follow: 1) Installed the conduit with the metal tip attached to the electric box 2) Sealed the joint between the conduit and concrete slab using the non-sag joint sealant 3) Sealed the joint between the electric box and the concrete slab using the non-sag joint sealant 4) Marked the location of the embedded sensor on top of the joints			
Materials Delivered ½" metal conduit ½" metal conduit tips Non-Sag Joint Sealant Spray paint			
Materials Removed NA			
Laboratory and Field Testing Performed NA			
Meetings/Discussions NA			
Safety Concerns NA			

Problem Areas/Additional Comments NA		
INSPECTOR OR REPRESENTATIVE		
Date 04/10/2019	Typed or Printed Name and Title Khaled Hamad	Signature *Khaled Hamad*

POURTHANE NS

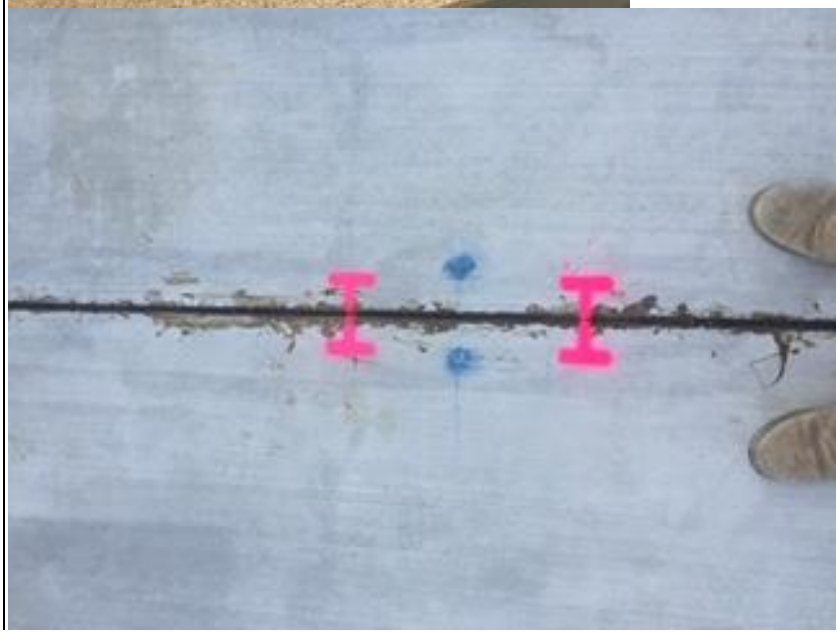

U.S. Department of Transportation **Federal Aviation Administration**	**Construction Progress and Inspection Report** **NAPMRC**		Inspection Date 04/11/2019 Project Name TO#15 Ref. Crack._Outdoor_Phase1
Contractor & # of Personnel	Contractor & # of Personnel GDIT 2 tech.	Contractor & # of Personnel	Contractor & # of Personnel
Equipment On-Site 1) Hand tools			
GDIT Start Time – 8:00 AM Stop Time -4:00 PM	Temperature High 57 deg. F Low 44 deg. F.	Humidity 46%	Conditions Cloudy NE @ 9.0 mph.
Site Activities 1) Installed the thermocouples on the concrete slab.			
Materials Delivered Thermocouple wiring			
Materials Removed NA			
Laboratory and Field Testing Performed NA			
Meetings/Discussions NA			
Safety Concerns NA			
Problem Areas/Additional Comments NA			

INSPECTOR OR REPRESENTATIVE		
Date 04/11/2019	Typed or Printed Name and Title Khaled Hamad	Signature Khaled Hamad

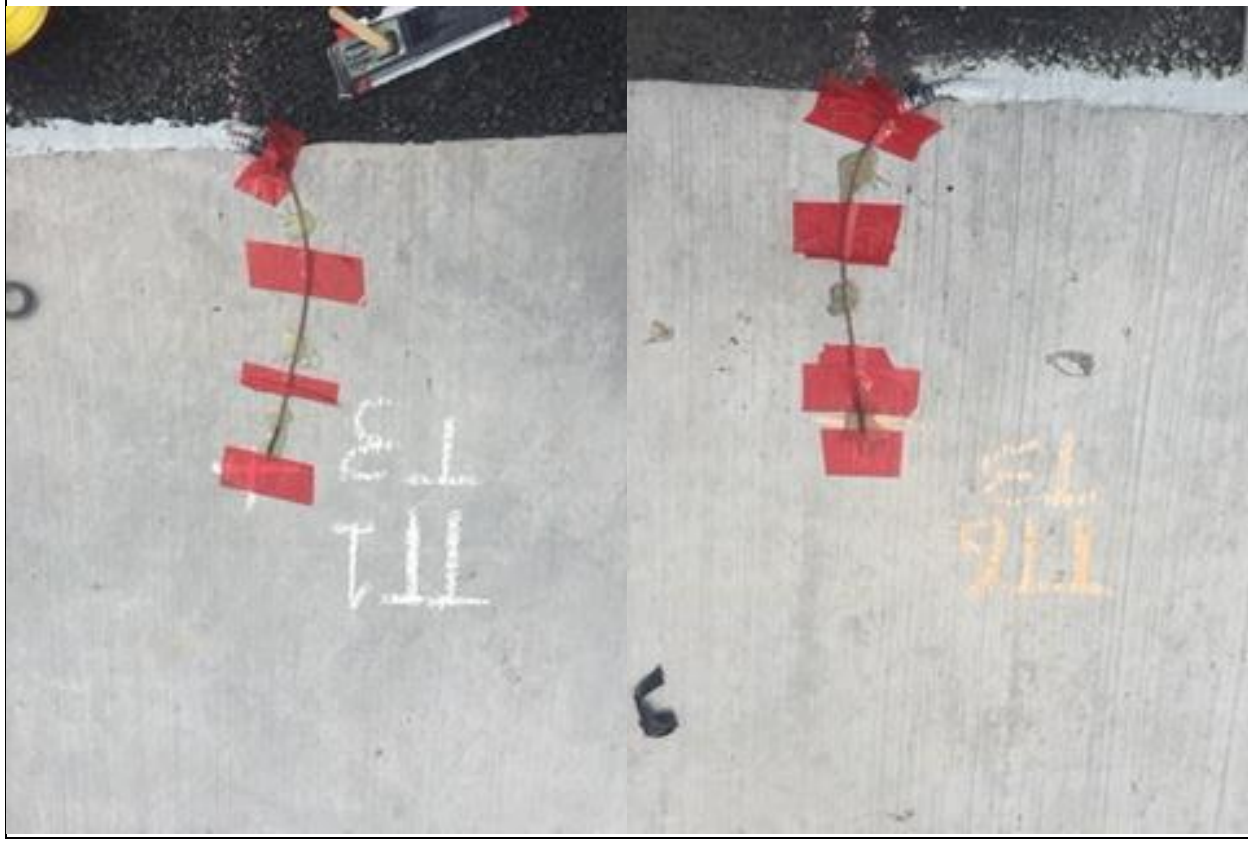
T13
T16

T06-T3

U.S. Department of Transportation **Federal Aviation Administration**	**Construction Progress and Inspection Report** **NAPMRC**		Inspection Date 04/12/2019 Project Name TO#15 Ref. Crack._Outdoor_Phase1
Contractor & # of Personnel	Contractor & # of Personnel GDIT 2 tech.	Contractor & # of Personnel	Contractor & # of Personnel
Equipment On-Site 1) Hand tools			
GDIT Start Time – 8:00 AM Stop Time -4:00 PM	Temperature High 60 deg. F Low 48 deg. F.	Humidity 80%	Conditions 9.0 mph.
Site Activities 1) Installed the embedded sensors.			
Materials Delivered Embedded sensors wiring			
Materials Removed NA			
Laboratory and Field Testing Performed NA			
Meetings/Discussions NA			
Safety Concerns NA			
Problem Areas/Additional Comments NA			

INSPECTOR OR REPRESENTATIVE		
Date 04/12/2019	Typed or Printed Name and Title Khaled Hamad	Signature Khaled Hamad

ELECTRIC

U.S. Department of Transportation **Federal Aviation Administration**	**Construction Progress and Inspection Report** **NAPMRC**		Inspection Date 04/15/2019 Project Name TO#15 Ref. Crack._Outdoor_Phase1
Contractor & # of Personnel	Contractor & # of Personnel	Contractor & # of Personnel	Contractor & # of Personnel
Equipment On-Site 1) Hand tools			
GDIT Start Time – 8:00 AM Stop Time -4:00 PM	Temperature High 65 deg. F Low 43 deg. F.	Humidity 23%	Conditions Sunny
Site Activities No activity			
Materials Delivered			
Materials Removed NA			
Laboratory and Field Testing Performed NA			
Meetings/Discussions NA			
Safety Concerns NA			
Problem Areas/Additional Comments NA			

INSPECTOR OR REPRESENTATIVE		
Date 04/15/2019	Typed or Printed Name and Title Khaled Hamad	Signature Khaled Hamad

U.S. Department of Transportation **Federal Aviation Administration**	**Construction Progress and Inspection Report** **NAPMRC**		Inspection Date 04/16/2019 Project Name TO#15 Ref. Crack._Outdoor_Phase1
Contractor & # of Personnel	Contractor & # of Personnel	Contractor & # of Personnel	Contractor & # of Personnel
Equipment On-Site 1) Hand tools			
GDIT Start Time – 8:00 AM Stop Time -4:00 PM	Temperature High 66 deg. F Low 46 deg. F.	Humidity 23%	Conditions Sunny W @ 17 mph
Site Activities No activity			
Materials Delivered			
Materials Removed NA			
Laboratory and Field Testing Performed NA			
Meetings/Discussions NA			
Safety Concerns NA			
Problem Areas/Additional Comments NA			

INSPECTOR OR REPRESENTATIVE		
Date 04/16/2019	Typed or Printed Name and Title Khaled Hamad	Signature Khaled Hamad

U.S. Department of Transportation **Federal Aviation Administration**	**Construction Progress and Inspection Report** **NAPMRC**		Inspection Date 04/17/2019 Project Name TO#15 Ref. Crack._Outdoor_Phase1
Contractor & # of Personnel	Contractor & # of Personnel	Contractor & # of Personnel	Contractor & # of Personnel
Equipment On-Site 1) Hand tools			
GDIT Start Time – 8:00 AM Stop Time -4:00 PM	Temperature High 58 deg. F Low 51 deg. F.	Humidity 45%	Conditions Wind 17 mph
Site Activities No activity			
Materials Delivered			
Materials Removed NA			
Laboratory and Field Testing Performed NA			
Meetings/Discussions NA			
Safety Concerns NA			
Problem Areas/Additional Comments NA			

INSPECTOR OR REPRESENTATIVE		
Date 04/17/2019	Typed or Printed Name and Title Khaled Hamad	Signature Khaled Hamad

U.S. Department of Transportation **Federal Aviation Administration**	**Construction Progress and Inspection Report** **NAPMRC**		Inspection Date 04/18/2019 Project Name TO#15 Ref. Crack._Outdoor_Phase1
Contractor & # of Personnel AE Stone. 1 operator. 1 forman.	Contractor & # of Personnel	Contractor & # of Personnel	Contractor & # of Personnel
Equipment On-Site 1) Hand tools 2) Cat Dozer D4G 3) Case Backhoe 4) truck			
GDIT Start Time – 8:00 AM Stop Time -4:00 PM	Temperature High 71 deg. F Low 60 deg. F.	Humidity 60%	Conditions Wind S @ 13 mph
Site Activities 1. Grading the west side between the concrete slab and DAQ 2. Reconstructing the swale west edge off slab.			
Materials Delivered Top Soil			
Materials Removed NA			
Laboratory and Field Testing Performed NA			
Meetings/Discussions NA			
Safety Concerns NA			
Problem Areas/Additional Comments NA			

INSPECTOR OR REPRESENTATIVE		
Date 04/18/2019	Typed or Printed Name and Title Khaled Hamad	Signature Khaled Hamad

CAT
D4G

CAT

U.S. Department of Transportation **Federal Aviation Administration**	**Construction Progress and Inspection Report** **NAPMRC**		Inspection Date 04/19/2019 Project Name TO#15 Ref. Crack._Outdoor_Phase1
Contractor & # of Personnel AE Stone. 1 operator. 1 forman. 1labor	Contractor & # of Personnel	Contractor & # of Personnel	Contractor & # of Personnel
Equipment On-Site 1) Hand tools 2) Cat Dozer D4G 3) Case Backhoe 4) Truck 5) FAA-Bobcat seed spreader 6) Survey Equipment			
GDIT Start Time – 8:00 AM Stop Time -4:00 PM	Temperature High 74 deg. F Low 61 deg. F.	Humidity 78%	Conditions Wind SSW @ 23 mph
Site Activities 1. Continue grading the west side between the concrete slab and DAQ 2. Continue reconstructing the swale west edge off slab. 3. Seeding			
Materials Delivered Top Soil Grass seed			
Materials Removed NA			
Laboratory and Field Testing Performed NA			
Meetings/Discussions NA			
Safety Concerns NA			

Problem Areas/Additional Comments NA		
INSPECTOR OR REPRESENTATIVE		
Date 04/19/2019	Typed or Printed Name and Title Khaled Hamad	Signature *Khaled Hamad*

U.S. Department of Transportation **Federal Aviation Administration**	**Construction Progress and Inspection Report** **NAPMRC**		Inspection Date 04/22/2019 Project Name TO#15 Ref. Crack._Outdoor_Phase1
Contractor & # of Personnel	Contractor & # of Personnel	Contractor & # of Personnel	Contractor & # of Personnel
Equipment On-Site			
GDIT Start Time – 8:00 AM Stop Time -4:00 PM	Temperature High 67 deg. F Low 52 deg. F.	Humidity 96%	Conditions Wind NNW @ 7 mph
Site Activities NA			
Materials Delivered			
Materials Removed NA			
Laboratory and Field Testing Performed NA			
Meetings/Discussions NA			
Safety Concerns NA			
Problem Areas/Additional Comments NA			

INSPECTOR OR REPRESENTATIVE		
Date 04/22/2019	Typed or Printed Name and Title Khaled Hamad	Signature Khaled Hamad

U.S. Department of Transportation **Federal Aviation Administration**	**Construction Progress and Inspection Report** **NAPMRC**		Inspection Date 04/23/2019 Project Name TO#15 Ref. Crack._Outdoor_Phase1
Contractor & # of Personnel	Contractor & # of Personnel	Contractor & # of Personnel	Contractor & # of Personnel
Equipment On-Site			
GDIT Start Time – 8:00 AM Stop Time -4:00 PM	Temperature High 80 deg. F Low 59 deg. F.	Humidity 29%	Conditions Wind SW @ 9 mph
Site Activities NA			
Materials Delivered			
Materials Removed NA			
Laboratory and Field Testing Performed NA			
Meetings/Discussions NA			
Safety Concerns NA			
Problem Areas/Additional Comments NA			

INSPECTOR OR REPRESENTATIVE		
Date 04/23/2019	Typed or Printed Name and Title Khaled Hamad	Signature Khaled Hamad

U.S. Department of Transportation **Federal Aviation Administration**	**Construction Progress and Inspection Report** **NAPMRC**		Inspection Date 04/24/2019 Project Name TO#15 Ref. Crack._Outdoor_Phase1
Contractor & # of Personnel	Contractor & # of Personnel	Contractor & # of Personnel	Contractor & # of Personnel
Equipment On-Site			
GDIT Start Time – 8:00 AM Stop Time -4:00 PM	Temperature High 80 deg. F Low 59 deg. F.	Humidity 29%	Conditions Wind SW @ 9 mph
Site Activities NA			
Materials Delivered			
Materials Removed NA			
Laboratory and Field Testing Performed NA			
Meetings/Discussions NA			
Safety Concerns NA			
Problem Areas/Additional Comments NA			

INSPECTOR OR REPRESENTATIVE		
Date 04/24/2019	Typed or Printed Name and Title Khaled Hamad	Signature Khaled Hamad

U.S. Department of Transportation **Federal Aviation Administration**	**Construction Progress and Inspection Report** **NAPMRC**		Inspection Date 04/25/2019 Project Name TO#15 Ref. Crack._Outdoor_Phase1
Contractor & # of Personnel AE Stone 2labor 1forman	Contractor & # of Personnel	Contractor & # of Personnel	Contractor & # of Personnel
Equipment On-Site Hand tools			
Start Time – 3:30 AM Stop Time -4:30 PM	Temperature High 61 deg. F Low 53 deg. F.	Humidity 59%	Conditions Cloudy 13 mph
Site Activities Started form work			
Materials Delivered 2x4s wood 3” nails			
Materials Removed NA			
Laboratory and Field Testing Performed NA			
Meetings/Discussions NA			
Safety Concerns NA			
Problem Areas/Additional Comments NA			

INSPECTOR OR REPRESENTATIVE		
Date 04/25/2019	Typed or Printed Name and Title Khaled Hamad	Signature Khaled Hamad

U.S. Department of Transportation **Federal Aviation Administration**	**Construction Progress and Inspection Report** **NAPMRC**		Inspection Date 04/26/2019 Project Name TO#15 Ref. Crack._Outdoor_Phase1
Contractor & # of Personnel AE Stone 2labor 1forman	Contractor & # of Personnel	Contractor & # of Personnel	Contractor & # of Personnel
Equipment On-Site Hand tools			
Start Time – 8:00 AM Stop Time -4:00 PM	Temperature High 61 deg. F Low 53 deg. F.	Humidity 49%	Conditions Cloudy 10 mph
Site Activities Continue form work			
Materials Delivered 2x4s wood 3” nails			
Materials Removed NA			
Laboratory and Field Testing Performed NA			
Meetings/Discussions NA			
Safety Concerns NA			
Problem Areas/Additional Comments NA			

INSPECTOR OR REPRESENTATIVE		
Date 04/26/2019	Typed or Printed Name and Title Khaled Hamad	Signature Khaled Hamad

U.S. Department of Transportation **Federal Aviation Administration**	**Construction Progress and Inspection Report** **NAPMRC**		Inspection Date 04/29/2019 Project Name TO#15 Ref. Crack._Outdoor_Phase1
Contractor & # of Personnel AE Stone 2labor 1forman	Contractor & # of Personnel	Contractor & # of Personnel	Contractor & # of Personnel
Equipment On-Site Hand tools			
Start Time – 8:00 AM Stop Time -4:00 PM	Temperature High 67 deg. F Low 52 deg. F.	Humidity 100%	Conditions 10 mph
Site Activities Continue form work finish installing form work Spreading neat tack indoor and outdoor reflective cracking			
Materials Delivered Neat Tack 64-22			
Materials Removed NA			
Laboratory and Field Testing Performed NA			
Meetings/Discussions NA			
Safety Concerns NA			
Problem Areas/Additional Comments NA			

INSPECTOR OR REPRESENTATIVE		
Date 04/29/2019	Typed or Printed Name and Title Khaled Hamad	Signature Khaled Hamad

U.S. Department of Transportation **Federal Aviation Administration**	**Construction Progress and Inspection Report** **NAPMRC**		Inspection Date 04/30/2019 Project Name TO#15 Ref. Crack._Outdoor_Phase1
Contractor & # of Personnel AE Stone 5labor 1forman 3 operators	Contractor & # of Personnel GDIT 3 Tech	Contractor & # of Personnel	Contractor & # of Personnel
Equipment On-Site MTV, Backhoe, Paver, Roller x 2, mini roller, hand tools			
Start Time – 8:00 AM Stop Time -4:00 PM	Temperature High 77 deg. F Low 53 deg. F.	Humidity 47%	Conditions Mostly Sunny WSW10 mph
Site Activities Installed embedded sensors Paved the only lift (3" compacted)			
Materials Delivered Asphalt 64-22			
Materials Removed NA			
Laboratory and Field Testing Performed Field Material Density (Aestone craig testing)			
Meetings/Discussions NA			
Safety Concerns NA			
Problem Areas/Additional Comments The form on the outdoor tilted outward.			

INSPECTOR OR REPRESENTATIVE		
Date 04/30/2019	Typed or Printed Name and Title Khaled Hamad	Signature Khaled Hamad

U.S. Department of Transportation **Federal Aviation Administration**	**Construction Progress and Inspection Report** **NAPMRC**		Inspection Date 05/01/2019 Project Name TO#15 Ref. Crack._Outdoor_Phase1
Contractor & # of Personnel	Contractor & # of Personnel	Contractor & # of Personnel	Contractor & # of Personnel
Equipment On-Site			
Start Time – 8:00 AM Stop Time -4:00 PM	Temperature High 61 deg. F Low 59 deg. F.	Humidity 80%	Conditions Cloudy E 13 mph
Site Activities No Activities			
Materials Delivered			
Materials Removed NA			
Laboratory and Field Testing Performed			
Meetings/Discussions NA			
Safety Concerns NA			
Problem Areas/Additional Comments NA			

INSPECTOR OR REPRESENTATIVE		
Date 05/01/2019	Typed or Printed Name and Title Khaled Hamad	Signature Khaled Hamad

U.S. Department of Transportation **Federal Aviation Administration**	**Construction Progress and Inspection Report** **NAPMRC**		Inspection Date 05/22/2019 Project Name TO#15 Ref. Crack._Outdoor_Phase1
Contractor & # of Personnel AE Stone 2labor 1forman	Contractor & # of Personnel	Contractor & # of Personnel	Contractor & # of Personnel
Equipment On-Site • Saw • Hand tools			
Start Time – 8:00 AM Stop Time -4:00 PM	Temperature High 73 deg. F Low 48 deg. F.	Humidity 32%	Conditions 13 mph
Site Activities *Saw cut the edge to create a vertical smooth edge as per plan			
Materials Delivered N/a			
Materials Removed NA			
Laboratory and Field Testing Performed NA			
Meetings/Discussions NA			
Safety Concerns NA			
Problem Areas/Additional Comments Our instrumentation team marked the location of the gages wiring. While sawing the west edge the gage wires where cut, beyond the location of the mark. After investigation due to rolling operation the wire migrated 6”-8” parallel to the concrete slab and 1 ½” up into the P401, the good think is we can splice and reconnect the wiring for the gages			
INSPECTOR OR REPRESENTATIVE			
Date 05/22/2019	Typed or Printed Name and Title Khaled Hamad	Signature Khaled Hamad	

U.S. Department of Transportation **Federal Aviation Administration**	**Construction Progress and Inspection Report** **NAPMRC**		Inspection Date 05/23/2019 Project Name TO#15 Ref. Crack._Outdoor_Phase1
Contractor & # of Personnel AE Stone 2labor 2operators	Contractor & # of Personnel	Contractor & # of Personnel	Contractor & # of Personnel
Equipment On-Site • Loader • Mini excavator			
Start Time – 8:00 AM Stop Time -4:00 PM	Temperature High 73 deg. F Low 57 deg. F.	Humidity 68%	Conditions 16 mph
Site Activities *clean the edge after saw, north end, south end, and middle 3 slabs			
Materials Delivered N/a			
Materials Removed NA			
Laboratory and Field Testing Performed NA			
Meetings/Discussions NA			
Safety Concerns NA			
Problem Areas/Additional Comments NA			

INSPECTOR OR REPRESENTATIVE		
Date 05/23/2019	Typed or Printed Name and Title Khaled Hamad	Signature Khaled Hamad

U.S. Department of Transportation **Federal Aviation Administration**	**Construction Progress and Inspection Report** **NAPMRC**		Inspection Date 05/24/2019 Project Name TO#15 Ref. Crack._Outdoor_Phase1
Contractor & # of Personnel GDIT 1 tech	Contractor & # of Personnel	Contractor & # of Personnel	Contractor & # of Personnel
Equipment On-Site • Coring machine • Hand tools			
Start Time – 8:00 AM Stop Time -4:00 PM	Temperature High 81 deg. F Low 64 deg. F.	Humidity 48%	Conditions 26 mph
Site Activities *Cored and connected the gages *Tested the gages. They are communicating with the DAQ			
Materials Delivered N/a			
Materials Removed NA			
Laboratory and Field Testing Performed NA			
Meetings/Discussions NA			
Safety Concerns NA			
Problem Areas/Additional Comments NA			
INSPECTOR OR REPRESENTATIVE			

Date	Typed or Printed Name and Title	Signature
05/24/2019	Khaled Hamad	Khaled Hamad

APPENDIX F

P-152MR (Existing Subgrade) Material Testing

	NATIONAL AIRPORT PAVEMENT TEST FACILITY TRANSMITTAL OF SHOP DRAWINGS, EQUIPMENT DATA, MATERIAL SAMPLES, OR MANUFACTURER'S CERTIFICATES OF COMPLIANCE	**National Airport Pavement Test Facility** **William J. Hughes Technical Center** **Atlantic City International Airport** **New Jersey 08405**

Task Order:	Task Order 015		**Date Submitted:**	09/20/2018
Project Name:	Reflective Cracking (Outdoor Phase I)		**Specification No.:**	P-152MR
Transmittal Description:	P-152 Subgrade Acceptance Recommendation		**Source:**	
Transmittal Purpose:	For Information Only		**Transmittal Type:**	Re-Submittal

Item No.:	**Description:**	**Variation:**	**Contractor Recommendation:**
1	Subgrade Compaction and Final Elevation Results		A

Contractor Remarks:

1	Compaction results from AM to PM readings both averaged over 95% for the (15) tests performed each time. The material was re-compacted after the AM tests a total of (16) passes for the entire section and an additional (25) times in the small area with AM readings below 95%. The average compaction percent dropped from 96.3% in the AM to 95.3% in the PM.	APPROVED 6/29/18
2	Elevation results show a few spots lower than the tolerance (0.042') but a minimum 8" pf P-154 will be present throughout the test section. A majority of the spots out of the tolerance range from 1/8" to 1/4" deeper than required.	APPROVED 6/29/18
3	Pages 2-5 are testing results from the AM, Pages 6-8 are from the afternoon and shown on elevation map.	**Additional information**
4		
5		
6		
7		
8		
9		
10		

Contractor Approval Actions:

Janine Abyad	09/20/2018
Contractor Name & Signature	***Date***

FAA Review Action Codes:

		"A" - Approved as Submitted; Completed
		"B" - Approved, except as noted on drawings; Completed
		"C" - Approved, resubmission required
		"D" - Returned by Correspondence; Completed
		"E" - Disapproved (see attached); Resubmit
		"F" - Receipt Acknowledged; Completed
		"G" - Other (Specify); Resubmit
		"X" - Receipt Acknowledged, does not comply; Resubmit

FAA Approval Actions:	
FAA Name & Signature	***Date***

Additional FAA Comments:

1	
2	
3	
4	
5	

CRAIG
TESTING LABORATORIES, INC.
5439 Harding Highway • P.O. Box 427 • Mays Landing, NJ 08330-0427 • (609) 625-1700 • FAX (609) 625-1798

CLIENT: General Dynamics Information Technology

PROJECT NO.: 811092-2

PROJECT: Reflective Cracking Outdoor Phase I, Building 296 Outdoors, William J. Hughes Technical Center

REPORT NO.: FD-3

INSPECTED BY: Harvey Rheiner

DATE INSPECTED: June 28, 2018

GEOTECHNICAL REPORT BY: N/A

DATED: N/A

EARTHWORK FIELD INSPECTION REPORT

Item Inspected: ☐ Building Pad ☐ Slab ☐ Foundation ☑ Other: Test Area
☐ Utility Trench ☐ Sub-Grade ☐ Pavement Sub-Base Compactor Model: Dynapac CA 25D

	Location	Dry Density (pcf)	Percent Moisture	Proctor (pcf) ASTM D1557	Optimum Moisture (%)	Compaction Required (%)	Percent Compaction
1	Between stations 0+02.5 - 0+12.5	112.3	11.8	125.7	8.9	95.0	89.3%
2	Between stations 0+12.5 - 0+22.5	118.6	10.9	125.7	8.9	95.0	94.4%
3	Between stations 0+22.5 - 0+32.5	118.6	13.1	125.7	8.9	95.0	94.4%
4	Between stations 0+32.5 - 0+42.5	120.7	13.0	125.7	8.9	95.0	96.0%
5	Between stations 0+42.5 - 0+52.5	119.9	15.5	125.7	8.9	95.0	95.4%
6	Between stations 0+52.5 - 0+62.5	117.1	9.0	125.7	8.9	95.0	93.2%
7	Between stations 0+62.5 - 0+72.5	121.7	11.5	125.7	8.9	95.0	96.8%
8	Between stations 0+72.5 - 0+82.5	119.5	12.0	125.7	8.9	95.0	95.1%
9	Between stations 0+82.5 - 0+92.5	119.0	8.7	125.7	8.9	95.0	94.7%
10	Between stations 0+92.5 - 1+02.5	122.7	9.6	125.7	8.9	95.0	97.6%

Loose Lift Thickness (in.): N/A

Fill Placement: ☐ Controlled ☐ Uncontrolled

Continued on following page . . .

CRAIG TESTING LABORATORIES, INC.
5439 Harding Highway • P.O. Box 427 • Mays Landing, NJ 08330-0427 • (609) 625-1700 • FAX (609) 625-1798

CLIENT: General Dynamics Information Technology

PROJECT NO.: 811092-2

PROJECT: Reflective Cracking Outdoor Phase I, Building 296 Outdoors, William J. Hughes Technical Center

REPORT NO.: FD-3

INSPECTED BY: Harvey Rheiner

DATE INSPECTED: June 28, 2018

GEOTECHNICAL REPORT BY: N/A

DATED: N/A

EARTHWORK FIELD INSPECTION REPORT

Item Inspected: ☐ Building Pad ☐ Slab ☐ Foundation ☐ Other: Test Area
☐ Utility Trench ☐ Sub-Grade ☐ Pavement Sub-Base Compactor Model: Dynapac CA 25D

	Location	Dry Density (pcf)	Percent Moisture	Proctor (pcf) ASTM D155	Optimum Moisture (%)	Compaction Required (%)	Percent Compaction
11	Between stations 1+02.5 - 1+12.5	120.7	12.4	125.7	8.9	95.0	96.0%
12	Between stations 1+12.5 - 1+22.5	120.8	11.2	125.7	8.9	95.0	96.1%
13	Between stations 1+22.5 - 1+32.5	119.4	11.4	125.7	8.9	95.0	95.0%
14	Between stations 1+32.5 - 1+42.5	123.7	8.1	125.7	8.9	95.0	98.4%
15	Between stations 1+42.5 - 1+52.5	125.6	7.8	125.7	8.9	95.0	99.9%
16	Between stations 1+52.5 - 1+62.5	121.5	13.1	125.7	8.9	95.0	96.7%
17	Between stations 1+62.5 - 1+72.5	128.7	6.1	125.7	8.9	95.0	102.4%
18	Between stations 1+72.5 - 1+82.5	124.2	9.4	125.7	8.9	95.0	98.8%
19	Between stations 0+22.5 - 0+32.5	114.9	13.1	125.7	8.9	95.0	91.4%
20	Between stations 0+02.5 - 0+12.5	114.0	11.4	125.7	8.9	95.0	90.7%

Gauge Serial No.: 33785 Gauge Standard Counts: MS: 632 DS: 1897

Fill Placement: ☐ Controlled ☐ Uncontrolled **Loose Lift Thickness (in.):** N/A

Hours on Site: 8:00 am - 11:00 am

Inspection Findings

Report for Informational Purposes Only

Remarks:

Reported to:
Project Distribution

Reviewed By: Ian Craig

REV 4/17

CRAIG TESTING LABORATORIES, INC.
5439 Harding Highway • P.O. Box 427 • Mays Landing, NJ 08330-0427 • (609) 625-1700 • FAX (609) 625-1798

CLIENT: General Dynamics Information Technology

PROJECT NO.: 811092-2

PROJECT: Reflective Cracking Outdoor Phase I, Building 296 Outdoors, William J. Hughes Technical Center

REPORT NO.: FD-4

INSPECTED BY: Harvey Rheiner

DATE INSPECTED: June 28, 2018

GEOTECHNICAL REPORT BY: N/A

DATED: N/A

EARTHWORK FIELD INSPECTION REPORT

Item Inspected: ☐ Building Pad ☐ Slab ☐ Foundation ☑ Other: Test Area
☐ Utility Trench ☐ Sub-Grade ☐ Pavement Sub-Base Compactor Model: Dynapac CA 25D

	Location	Dry Density (pcf)	Percent Moisture	Proctor (pcf) ASTM D1557	Optimum Moisture (%)	Compaction Required (%)	Percent Compaction
1	Between stations 0+02.5 - 0+12.5	119.3	11.5	125.7	8.9	95.0	94.9%
2							
3							
4							
5							
6							
7							
8							
9							
10							

Gauge Serial No.: 33785 Gauge Standard Counts: MS: 632 DS: 1897

Fill Placement: ☐ Controlled ☐ Uncontrolled **Loose Lift Thickness (in.):** N/A

Hours on Site: 8:00 am - 11:00 am

Inspection Findings

Report for Informational Purposes Only

Remarks:

Reported to:
Project Distribution

Reviewed By: Ian Craig

REV 4/17

Field Notes of Craig Testing Nuclear Density Gage Results ASTM D6938				
TO 015 Reflective Cracking Outdoor Phase 1 P-152MR Subgrade				
Performed by Craig Testing Laboratories				
Final Testing results to be provided 6/28/2018				
Notes compiled by Tirupan Mandal 6/28/2018				
Station Range in Relation to Slab Joints	Offset	Station	Percent of Maximum Dry Density %	Moisture %
0+02.5 to 0+12.5	-1.00	3.7	89.3	11.8
0+12.5 to 0+22.5	0.00	17.3	94.4	13.1
0+22.5 to 0+32.5	-0.30	25.1	96.1	13.0
0+32.5 to 0+42.5	2.50	35.0	95.4	15.5
0+42.5 to 0+52.5	-1.50	48.0	96.8	11.5
0+52.5 to 0+62.5	4.50	57.5	95.1	12.0
0+62.5 to 0+72.5	3.50	69.0	94.7	8.7
0+72.5 to 0+82.5	1.00	80.0	97.6	9.6
0+82.5 to 0+92.5	2.00	87.0	96.0	12.4
0+92.5 to 1+02.5	1.00	96.0	96.1	11.2
1+02.5 to 1+12.5	1.50	107.0	95.0	11.4
1+12.5 to 1+22.5	-2.50	114.5	98.4	8.1
1+22.5 to 1+32.5	2.50	126.0	99.9	7.8
1+32.5 to 1+42.5	1.50	136.0	96.6	13.1
1+42.5 to 1+52.5	0.50	145.5	102.4	6.1
		Average:	96.3	11.0

CRAIG TESTING LABORATORIES, INC.
5439 Harding Highway • P.O. Box 427 • Mays Landing, NJ 08330-0427 • (609) 625-1700 • FAX (609) 625-1798

CLIENT: General Dynamics Information Technology

PROJECT NO.: 811092-2

PROJECT: Reflective Cracking Outdoor Phase I, Building 296 Outdoors, William J. Hughes Technical Center

REPORT NO.: FD-5

INSPECTED BY: Kirk Herman

DATE INSPECTED: June 28, 2018

GEOTECHNICAL REPORT BY: N/A

DATED: N/A

EARTHWORK FIELD INSPECTION REPORT

Item Inspected: ☐ Building Pad ☐ Slab ☐ Foundation ☑ Other: Test Area
☐ Utility Trench ☐ Sub-Grade ☐ Pavement Sub-Base Compactor Model:

	Location	Dry Density (pcf)	Percent Moisture	Proctor (pcf) ASTM D155	Optimum Moisture (%)	Compaction Required (%)	Percent Compaction
1	Station 11 - Offset 0.00	120.2	11.7	125.7	8.9	95.0	95.6%
2	Station 18.5 - Offset -4.00	116.9	12.7	125.7	8.9	95.0	93.0%
3	Station 32 - Offset 1.00	117.7	11.4	125.7	8.9	95.0	93.6%
4	Station 36.5 - Offset -2.00	121.6	13.0	125.7	8.9	95.0	96.7%
5	Station 51.5 - Offset 2.00	114.7	5.2	125.7	8.9	95.0	91.2%
6	Station 53.5 - Offset 0.00	112.6	6.3	125.7	8.9	95.0	89.6%
7	Station 67.5 - Offset -2.00	119.8	11.8	125.7	8.9	95.0	95.3%
8	Station 73.5 - Offset 2.00	121.7	11.5	125.7	8.9	95.0	96.8%
9	Station 86.5 - offset -1.00	121.6	13.1	125.7	8.9	95.0	96.7%
10	Station 98.5 - Offset 0.00	121.5	10.8	125.7	8.9	95.0	96.7%

Loose Lift Thickness (in.): N/A

Fill Placement: ☐ Controlled ☐ Uncontrolled

Continued on following page . . .

CRAIG TESTING LABORATORIES, INC.
5439 Harding Highway • P.O. Box 427 • Mays Landing, NJ 08330-0427 • (609) 625-1700 • FAX (609) 625-1798

CLIENT: General Dynamics Information Technology

PROJECT NO.: 811092-2

PROJECT: Reflective Cracking Outdoor Phase I, Building 296 Outdoors, William J. Hughes Technical Center

REPORT NO.: FD-5

INSPECTED BY: Kirk Herman

DATE INSPECTED: June 28, 2018

GEOTECHNICAL REPORT BY: N/A

DATED: N/A

EARTHWORK FIELD INSPECTION REPORT

Item Inspected: ☐ Building Pad ☐ Slab ☐ Foundation ☑ Other: Test Area
☐ Utility Trench ☐ Sub-Grade ☐ Pavement Sub-Base Compactor Model:

	Location	Dry Density (pcf)	Percent Moisture	Proctor (pcf) ASTM D15	Optimum Moisture (%)	Compaction Required (%)	Percent Compaction
11	Station 111 - Offset -2.00	121.3	9.6	125.7	8.9	95.0	96.5%
12	Station 113.5 - Offset 3.00	122.1	9.7	125.7	8.9	95.0	97.1%
13	Station 130 - Offset -3.00	121.9	8.1	125.7	8.9	95.0	97.0%
14	Station 139.5 - Offset 2.00	124.0	7.3	125.7	8.9	95.0	98.6%
15	Station 144 - Offset -3.00	120.8	6.5	125.7	8.9	95.0	96.1%
16							
17							
18							
19							
20							

Gauge Serial No.: 25540 Gauge Standard Counts: MS: 633 DS: 1693

Fill Placement: ☐ Controlled ☐ Uncontrolled **Loose Lift Thickness (in.):** N/A

Hours on Site: 2:00 PM - 4:15 PM

Inspection Findings

Report for Informational Purposes Only

Remarks:

Reported to:
Project Distribution

Reviewed By: Ian Craig

REV 4/17

Field Notes of Craig Testing Nuclear Density Gage Results ASTM D6938				
TO 015 Reflective Cracking Outdoor Phase 1 P-152MR Subgrade				
Performed by Craig Testing Laboratories				
Final Testing results to be provided 6/29/2018				
Notes compiled by Tirupan Mandal 6/28/2018				
Station Range in Relation to Slab Joints	Offset	Station	Percent of Maximum Dry Density %	Moisture %
0+02.5 to 0+12.5	0.00	11	95.6	11.7
0+12.5 to 0+22.5	-4.00	18.5	93.0	12.7
0+22.5 to 0+32.5	1.00	32	93.6	11.4
0+32.5 to 0+42.5	-2.00	36.5	96.7	13.0
0+42.5 to 0+52.5	2.00	51.5	91.2	5.2
0+52.5 to 0+62.5	0.00	53.5	89.6	6.3
0+62.5 to 0+72.5	-2.00	67.5	95.3	11.8
0+72.5 to 0+82.5	2.00	73.5	96.8	11.5
0+82.5 to 0+92.5	-1.00	86.5	96.7	13.1
0+92.5 to 1+02.5	0.00	98.5	96.7	10.8
1+02.5 to 1+12.5	-2.00	111	96.5	9.6
1+12.5 to 1+22.5	3.00	113.5	97.1	9.7
1+22.5 to 1+32.5	-3.00	130	97.0	8.1
1+32.5 to 1+42.5	2.00	139.5	98.0	7.3
1+42.5 to 1+52.5	-3.00	144	96.1	6.5
		Average:	95.3	9.9

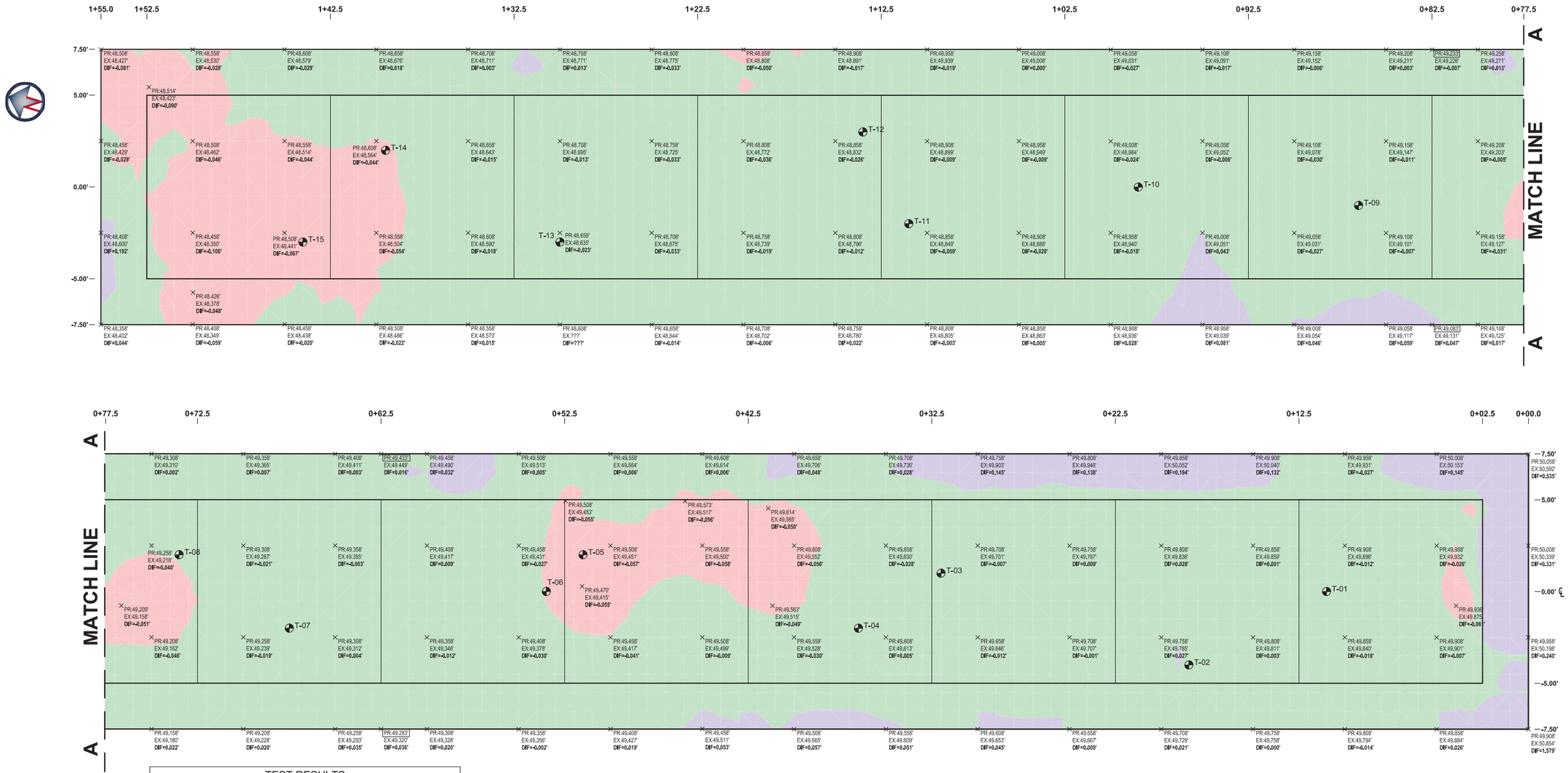

PLAN VIEW

SCALE: 1"=3'

TEST RESULTS					
ID	STA.	OFF.	DRY DENSITY	PERCENT COMPACTION	PERCENT MOISTURE
T-01	0+11.0	0.0	120.2	95.6	11.7
T-02	0+18.5	-4.0	116.9	93.0	12.7
T-03	0+32.0	1.0	117.7	83.6	11.4
T-04	0+36.5	-2.0	121.6	96.7	13.0
T-05	0+51.5	2.0	114.7	91.2	5.2
T-06	0+53.5	0.0	112.6	89.6	6.3
T-07	0+67.5	-2.0	119.8	95.3	11.8
T-08	0+73.5	2.0	121.7	96.8	11.5
T-09	0+86.5	-1.0	121.6	96.7	13.1
T-10	0+98.5	0.0	121.5	96.7	10.8
T-11	1+11.0	-2.0	121.3	96.5	9.6
T-12	1+13.5	3.0	122.1	97.1	9.7
T-13	1+30.0	-3.0	121.9	97.0	8.1
T-14	1+39.5	2.0	124.0	98.6	7.3
T-15	1+44.0	-3.0	120.8	96.1	6.5

* TEST PERFORMED ON 6/28/2018
* PROCTOR VALUE OF 125.7 pcf AND 8.9% MOISTURE.

3' 2' 1' 0 3' 6' 9'

GRAPHIC SCALE

1" = 3'

CUT (+) AND FILL (-) SUMMARY TABLE				
ID	COLOR	MIN. [FT]	MAX. [FT]	AREA [SQ. FT]
1		-0.113	-0.042	265.09
2		-0.042	0.042	1925.01
3		0.042	0.956	134.87

LEGEND:

- TEST LOCATION
- x - SPOT ELEVATION
- PR - PROPOSED ELEVATION
- EX - EXISTING ELEVATION
- DIF - DIFFERENCE IN ELEVATION
- GRADE TOLERANCE: ± 0.042'(½")
- CONFORMING ELEVATION
- ELEVATION BELOW THE CONFORMANCE RANGE
- ELEVATION ABOVE THE CONFORMANCE RANGE

NO.	REVISIONS	DATE	BY	CHK	APR

RODRIGUEZ CONSULTING, LLC
1301 N 2ND STREET
PHILADELPHIA, PA 19122
PHONE: (215) 839-8087

GENERAL DYNAMICS
Information Technology
200 DECADON DRIVE
EGG HARBOR TOWNSHIP
NEW JERSEY 08234
PHONE: (609) 677-8543

FOR

NATIONAL AIRPORT PAVEMENT TEST FACILITY
ATLANTIC CITY AIRPORT
NEW JERSEY 08234

	NAME	DATE
DRAWN	M. MAZUREK	08/10/2018
CHECKED	H.Y. / J.G.	
FAA APPROVAL DATE:		

REFLECTIVE CRACKING OUTDOOR

PHASE I - AS-BUILT SUBGRADE ELEVATION MAP

PROJECT NO: | SIZE: ANSI D | SCALE: 1"=3' | SHEET 1 OF 1

CAD FILE: REFL-CRACK-OUT1-CONF.DWG

FIELD TEST RESULTS

ASTM E2583 - Light Weight Deflectometer (LWD)

Project: RC Outdoor Phase I
Date: 06/29/2018
Technician: Jason Alcoba
Layer Material: P-152MR(Existing Subgrade)
Lift Number: 1
Layer Thickness (in): N/A
Plate Diameter (in): 11.8
Number of Sensors: 1

Radial Offset of Sensor (in): 0
Height of Drops (in): 6, 12, 18, 24
Falling Weight (lbs): 22.04
Buffer Type: Hard
Ground Temperature (°F): 97-108
Ambient Temperature (°F): 94
Equipment Calibration Date: N/A

Preconditioning Drops						
Load 1, lbf	Load 2, lbf	Load 3, lbf	Load 4, lbf	Load 5, lbf	% Difference <3%?	
1080	1080	1086	1082	1082	Yes	
Test Results						
Location	Height, in	Load, lbf	Stress, psi	Deflection, mils	Stiffness, ksi	% Difference <3%?
0+07.5, 0	6	577.25	5.25	4.1	13.25	Yes
	12	740.7	6.75	5.35	13.05	Yes
	18	905.5	8.25	6.8	12.55	Yes
	24	1077.2	9.8	8.4	12.05	Yes
0+17.5, 0	6	583.55	5.3	3.3	16.6	Yes
	12	752.9	6.85	4.3	16.5	Yes
	18	917.3	8.4	5.3	16.4	Yes
	24	1085.4	9.9	6.5	15.8	Yes
0+27.5, 0	6	581.9	5.3	5	11	Yes
	12	735.45	6.7	6.3	11	Yes
	18	914.05	8.3	8	10.75	Yes
	24	1074.2	9.8	9.7	10.5	Yes
0+37.5, 0	6	576.9	5.3	11.35	4.85	Yes
	12	729.8	6.65	14.85	4.65	Yes
	18	887.95	8.1	17.75	4.7	Yes
	24	1079.55	9.9	21.9	4.7	Yes
0+47.5, 0	6	570.15	5.2	4.45	12.1	Yes
	12	737.2	6.7	5.85	11.9	Yes
	18	903.45	8.25	7.2	11.85	Yes
	24	1079.5	9.85	8.7	11.75	Yes
0+57.5, 0	6	564.65	5.15	1.7	31.4	Yes
	12	734.25	6.7	2.3	30.2	Yes
	18	909.3	8.3	2.9	29.6	Yes
	24	1084.15	9.9	3.55	28.9	Yes
0+97.5, 0	6	562.1	5.1	1.9	27.8	Yes
	12	733.85	6.7	2.65	26.2	No
	18	903.4	8.25	3.4	25.15	Yes
	24	1080.95	9.9	4.2	24.4	Yes

Data Reviewed By: Matthew Brynick

Date: July 6, 2018

ASTM E2583 - Light Weight Deflectometer (LWD)

Project: RC Outdoor Phase I
Date: 06/29/2018
Technician: Jason Alcoba
Layer Material: P-152MR(Existing Subgrade)
Lift Number: 1
Layer Thickness (in): N/A
Plate Diameter (in): 11.8
Number of Sensors: 1

Radial Offset of Sensor (in): 0
Height of Drops (in): 6, 12, 18, 24
Falling Weight (lbs): 22.04
Buffer Type: Hard
Ground Temperature (°F): 97-108
Ambient Temperature (°F): 94
Equipment Calibration Date: N/A

Preconditioning Drops					
Load 1, lbf	Load 2, lbf	Load 3, lbf	Load 4, lbf	Load 5, lbf	% Difference <3%?
1080	1080	1086	1082	1082	Yes

Test Results						
Location	Height, in	Load, lbf	Stress, psi	Deflection, mils	Stiffness, ksi	% Difference <3%?
1+07.5, 0	6	559.2	5.1	2.8	18.9	Yes
	12	718.5	6.55	3.85	17.6	Yes
	18	894.1	8.15	4.9	17.2	Yes
	24	1067.3	9.7	6	16.7	Yes
1+17.5, 0	6	564.1	5.15	1.7	31.4	Yes
	12	727.65	6.6	2.3	29.7	Yes
	18	904.25	8.25	2.8	30.5	Yes
	24	1073.75	9.8	3.5	29	Yes
1+27.5, 0	6	563.4	5.15	3.2	16.65	Yes
	12	726.55	6.65	4.1	16.8	Yes
	18	901.8	8.2	5	17	Yes
	24	1073.25	9.8	6	16.9	Yes
1+37.5, 0	6	561.65	5.1	1.5	35.2	Yes
	12	724.65	6.6	2.1	32.5	Yes
	18	901.7	8.25	2.6	32.9	Yes
	24	1076.6	9.8	3.2	31.7	Yes
1+47.5, 0	6	565.85	5.2	2.1	25.6	Yes
	12	732.95	6.7	2.8	24.8	Yes
	18	898.5	8.2	3.55	23.95	Yes
	24	1080.5	9.85	4.25	24	Yes

Additional Comments: *Average Modulus at 24-in. drop height: 18.9 ksi.*
P-152MR Properties from Nuclear Gauge Testing: Avg. Moisture Content: 9.9%, Avg. Density: 95.3%

D-Portable Seismic Pavement Analyzer (D-PSPA)

Project: RC Outdoor Phase I
Date: 06/29/2018
Technician: Jason Alcoba
Layer Material: P152MR (Existing Subgrade)
Lift Number: 1
Layer Density (pcf): 125.7
Poisson's Ratio: 0.35
Number of Receivers: 2

Source-near Receiver Spacing (in): 4
Near-far Receiver Spacing (in): 6
Ground Temperature (°F): 97-108
Ambient Temperature (°F): 94
Are wave-shapes reasonable? Yes
Are reduced (dispersion) curves close? Yes
Calibration performed according to SOP? Yes

Test Results			
Station	**Offset, ft**	**Average Temperature, °F**	**Average Modulus, ksi**
0+07.5	0	97.3	23.3
0+17.5	0	99.6	27.0
0+27.5	0	103.1	37.7
0+37.5	0	104.5	39.2
0+47.5	0	106.0	26.3
0+57.5	0	106.0	71.8
0+97.5	0	99.1	73.0
1+07.5	0	101.3	54.0
1+17.5	0	104.7	70.2
1+27.5	0	105.5	24.5
1+37.5	0	106.0	60.2
1+47.5	0	105.6	N/A

Additional Comments: *Avg. Modulus: 46.1 ksi*
Properties from Nuclear Gauge Testing: Avg. Moisture Content: 9.9%, Avg. Density: 95.3%
At Station 1+47.5 a good set of reduction curves not obtained after 30 tests.

ASTM D6951 - Dynamic Cone Penetrometer (DCP)

Project: RC Outdoor Phase I
Section: N/A
Location: STA. 0+07.5, 0ft
Depth of Zero Point Below Surface (in): 8.43
Material Classification Option: All soils except for CL soils CBR<10 and CH soils
Material Type: P-152MR
Ground Conditions: Dry and free from contamination

Date: 7/26/18
Technician: James Keating
Hammer Weight (lbs.): 17.6 lbs (Dual Weight)
Weather: 74-90 F
Water Table Depth (ft): N/A
Moisture Content (%): 6.9
CBR Equation: CBR = 292/ (DCP × 25.4)^1.12

DCP Test Results

Total Number of Blows	Number of Blows (Between Test Readings)	Cumulative Penetration (in.)	Penetration Between Readings (in.)	Penetration per Blow	Hammer Factor (lbs.)	DCP Index (in.)/blow	CBR (%)	Moisture (%)
0	0	0.00	-	-	-	-	-	6.9
5	5	2.28	2.28	0.457	1	0.457	19	6.9
10	5	3.70	1.42	0.283	1	0.283	32	6.9
15	5	5.16	1.46	0.291	1	0.291	31	6.9
20	5	6.46	1.30	0.260	1	0.260	35	6.9
25	5	7.80	1.34	0.268	1	0.268	34	6.9
30	5	9.13	1.34	0.268	1	0.268	34	6.9
35	5	10.31	1.18	0.236	1	0.236	39	6.9
40	5	11.26	0.94	0.189	1	0.189	50	6.9
45	5	12.24	0.98	0.197	1	0.197	48	6.9
50	5	13.27	1.02	0.205	1	0.205	46	6.9
55	5	14.29	1.02	0.205	1	0.205	46	6.9
60	5	15.35	1.06	0.213	1	0.213	44	6.9
65	5	16.34	0.98	0.197	1	0.197	48	6.9
70	5	17.24	0.91	0.181	1	0.181	53	6.9
75	5	18.27	1.02	0.205	1	0.205	46	6.9
80	5	19.29	1.02	0.205	1	0.205	46	6.9
85	5	20.24	0.94	0.189	1	0.189	50	6.9
90	5	21.26	1.02	0.205	1	0.205	46	6.9

Figure 1. Summarized Datasheet for DCP Test on P-152MR layer (Station 0+07.5, 0)

ASTM D6951 - Dynamic Cone Penetrometer (DCP)

Project: RC Outdoor Phase I
Section: N/A
Location: STA. 0+17.5, 0ft
Depth of Zero Point Below Surface (in): 7.96
Material Classification Option: All soils except for CL soils CBR<10 and CH soils
Material Type: P-152MR
Ground Conditions: Dry and free from contamination

Date: 7/26/18
Technician: James Keating
Hammer Weight (lbs.): 17.6 lbs (Dual Weight)
Weather: 74-90 F
Water Table Depth (ft): N/A
Moisture Content (%): 6.9
CBR Equation: CBR = 292/ (DCP × 25.4)^1.12

DCP Test Results

Total Number of Blows	Number of Blows (Between Test Readings)	Cumulative Penetration (in.)	Penetration Between Readings (in.)	Penetration per Blow	Hammer Factor (lbs.)	DCP Index (in.)/blow	CBR (%)	Moisture (%)
0	0	0.00	-	-	-	-	-	6.9
5	5	1.54	1.54	0.307	1	0.307	29	6.9
10	5	2.83	1.30	0.260	1	0.260	35	6.9
15	5	3.98	1.14	0.228	1	0.228	41	6.9
20	5	5.08	1.10	0.220	1	0.220	42	6.9
25	5	6.18	1.10	0.220	1	0.220	42	6.9
30	5	7.28	1.10	0.220	1	0.220	42	6.9
35	5	8.35	1.06	0.213	1	0.213	44	6.9
40	5	9.49	1.14	0.228	1	0.228	41	6.9
45	5	10.63	1.14	0.228	1	0.228	41	6.9
50	5	11.69	1.06	0.213	1	0.213	44	6.9
55	5	12.76	1.06	0.213	1	0.213	44	6.9
60	5	13.78	1.02	0.205	1	0.205	46	6.9
65	5	14.80	1.02	0.205	1	0.205	46	6.9
70	5	15.87	1.06	0.213	1	0.213	44	6.9
75	5	17.09	1.22	0.244	1	0.244	38	6.9
80	5	18.27	1.18	0.236	1	0.236	39	6.9
85	5	19.37	1.10	0.220	1	0.220	42	6.9
90	5	20.39	1.02	0.205	1	0.205	46	6.9
95	5	21.50	1.10	0.220	1	0.220	42	6.9

Figure 2. Summarized Datasheet for DCP Test on P-152MR layer (Station 0+17.5, 0)

ASTM D6951 - Dynamic Cone Penetrometer (DCP)

Project: RC Outdoor Phase I
Section: N/A
Location: STA. 0+27.5, 0ft
Depth of Zero Point Below Surface (in): 8.12
Material Classification Option: All soils except for CL soils CBR<10 and CH soils
Material Type: P-152MR
Ground Conditions: Dry and free from contamination

Date: 7/26/18
Technician: James Keating
Hammer Weight (lbs.): 17.6 lbs (Dual Weight)
Weather: 74-90 F
Water Table Depth (ft): N/A
Moisture Content (%): 6.9
CBR Equation: CBR = 292/ (DCP × 25.4)^1.12

DCP Test Results

Total Number of Blows	Number of Blows (Between Test Readings)	Cumulative Penetration (in.)	Penetration Between Readings (in.)	Penetration per Blow	Hammer Factor (lbs.)	DCP Index (in.)/blow	CBR (%)	Moisture (%)
0	0	0.00	-	-	-	-	-	6.9
5	5	1.61	1.61	0.323	1	0.323	28	6.9
10	5	2.64	1.02	0.205	1	0.205	46	6.9
15	5	3.39	0.75	0.150	1	0.150	65	6.9
20	5	4.17	0.79	0.157	1	0.157	62	6.9
25	5	4.88	0.71	0.142	1	0.142	70	6.9
30	5	5.71	0.83	0.165	1	0.165	59	6.9
35	5	6.54	0.83	0.165	1	0.165	59	6.9
40	5	7.44	0.91	0.181	1	0.181	53	6.9
45	5	8.39	0.94	0.189	1	0.189	50	6.9
50	5	9.29	0.91	0.181	1	0.181	53	6.9
55	5	10.24	0.94	0.189	1	0.189	50	6.9
60	5	11.18	0.94	0.189	1	0.189	50	6.9
65	5	12.09	0.91	0.181	1	0.181	53	6.9
70	5	13.03	0.94	0.189	1	0.189	50	6.9
75	5	13.98	0.94	0.189	1	0.189	50	6.9
80	5	14.96	0.98	0.197	1	0.197	48	6.9
85	5	15.91	0.94	0.189	1	0.189	50	6.9
90	5	16.97	1.06	0.213	1	0.213	44	6.9
95	5	18.03	1.06	0.213	1	0.213	44	6.9
100	5	19.13	1.10	0.220	1	0.220	42	6.9
105	5	20.28	1.14	0.228	1	0.228	41	6.9
110	5	21.50	1.22	0.244	1	0.244	38	6.9

Figure 3. Summarized Datasheet for DCP Test on P-152MR layer (Station 0+27.5, 0)

ASTM D6951 - Dynamic Cone Penetrometer (DCP)

Project: RC Outdoor Phase I
Section: N/A
Location: STA. 0+37.5, 0ft
Depth of Zero Point Below Surface (in): 8.24
Material Classification Option: All soils except for CL soils CBR<10 and CH soils
Material Type: P-152MR
Ground Conditions: Dry and free from contamination

Date: 7/26/18
Technician: James Keating
Hammer Weight (lbs.): 17.6 lbs (Dual Weight)
Weather: 74-90 F
Water Table Depth (ft): N/A
Moisture Content (%): 6.9
CBR Equation: CBR = 292/ (DCP × 25.4)^1.12

DCP Test Results

Total Number of Blows	Number of Blows (Between Test Readings)	Cumulative Penetration (in.)	Penetration Between Readings (in.)	Penetration per Blow	Hammer Factor (lbs.)	DCP Index (in.)/blow	CBR (%)	Moisture (%)
0	0	0.00	-	-	-	-	-	6.9
5	5	1.65	1.65	0.331	1	0.331	27	6.9
10	5	2.44	0.79	0.157	1	0.157	62	6.9
15	5	3.15	0.71	0.142	1	0.142	70	6.9
20	5	3.86	0.71	0.142	1	0.142	70	6.9
25	5	4.72	0.87	0.173	1	0.173	56	6.9
30	5	5.87	1.14	0.228	1	0.228	41	6.9
35	5	7.76	1.89	0.378	1	0.378	23	6.9
40	5	10.39	2.64	0.528	1	0.528	16	6.9
45	5	12.60	2.20	0.441	1	0.441	20	6.9
50	5	15.35	2.76	0.551	1	0.551	15	6.9
55	5	18.15	2.80	0.559	1	0.559	15	6.9
60	5	20.51	2.36	0.472	1	0.472	18	6.9

Figure 4. Summarized Datasheet for DCP Test on P-152MR layer (Station 0+37.5, 0)

ASTM D6951 - Dynamic Cone Penetrometer (DCP)

Project: RC Outdoor Phase I
Section: N/A
Location: STA. 0+47.5, 0ft
Depth of Zero Point Below Surface (in): 8.71
Material Classification Option: All soils except for CL soils CBR<10 and CH soils
Material Type: P-152MR
Ground Conditions: Dry and free from contamination

Date: 7/26/18
Technician: James Keating
Hammer Weight (lbs.): 17.6 lbs (Dual Weight)
Weather: 74-90 F
Water Table Depth (ft): N/A
Moisture Content (%): 6.9
CBR Equation: CBR = 292/ (DCP × 25.4)^1.12

DCP Test Results

Total Number of Blows	Number of Blows (Between Test Readings)	Cumulative Penetration (in.)	Penetration Between Readings (in.)	Penetration per Blow	Hammer Factor (lbs.)	DCP Index (in.)/blow	CBR (%)	Moisture (%)
0	0	0.00	-	-	-	-	-	6.9
5	5	2.09	2.09	0.417	1	0.417	21	6.9
10	5	3.19	1.10	0.220	1	0.220	42	6.9
15	5	4.29	1.10	0.220	1	0.220	42	6.9
20	5	5.28	0.98	0.197	1	0.197	48	6.9
25	5	6.22	0.94	0.189	1	0.189	50	6.9
30	5	7.05	0.83	0.165	1	0.165	59	6.9
35	5	7.87	0.83	0.165	1	0.165	59	6.9
40	5	8.78	0.91	0.181	1	0.181	53	6.9
45	5	9.65	0.87	0.173	1	0.173	56	6.9
50	5	10.47	0.83	0.165	1	0.165	59	6.9
55	5	11.34	0.87	0.173	1	0.173	56	6.9
60	5	12.24	0.91	0.181	1	0.181	53	6.9
65	5	13.19	0.94	0.189	1	0.189	50	6.9
70	5	14.13	0.94	0.189	1	0.189	50	6.9
75	5	15.12	0.98	0.197	1	0.197	48	6.9
80	5	16.10	0.98	0.197	1	0.197	48	6.9
85	5	17.05	0.94	0.189	1	0.189	50	6.9
90	5	18.07	1.02	0.205	1	0.205	46	6.9
95	5	19.09	1.02	0.205	1	0.205	46	6.9
100	5	20.08	0.98	0.197	1	0.197	48	6.9
105	5	21.14	1.06	0.213	1	0.213	44	6.9
110	5	22.13	0.98	0.197	1	0.197	48	6.9

Figure 5. Summarized Datasheet for DCP Test on P-152MR layer (Station 0+47.5, 0)

ASTM D6951 - Dynamic Cone Penetrometer (DCP)

Project: RC Outdoor Phase I
Section: N/A
Location: STA. 0+57.5, 0ft
Depth of Zero Point Below Surface (in): 8.48
Material Classification Option: All soils except for CL soils CBR<10 and CH soils
Material Type: P-152MR
Ground Conditions: Dry and free from contamination

Date: 7/26/18
Technician: James Keating
Hammer Weight (lbs.): 17.6 lbs (Dual Weight)
Weather: 74-90 F
Water Table Depth (ft): N/A
Moisture Content (%): 6.9
CBR Equation: CBR = 292/ (DCP × 25.4)^1.12

DCP Test Results

Total Number of Blows	Number of Blows (Between Test Readings)	Cumulative Penetration (in.)	Penetration Between Readings (in.)	Penetration per Blow	Hammer Factor (lbs.)	DCP Index (in.)/blow	CBR (%)	Moisture (%)
0	0	0.00	-	-	-	-	-	6.9
5	5	1.54	1.54	0.307	1	0.307	29	6.9
10	5	2.87	1.34	0.268	1	0.268	34	6.9
15	5	4.09	1.22	0.244	1	0.244	38	6.9
20	5	5.28	1.18	0.236	1	0.236	39	6.9
25	5	6.46	1.18	0.236	1	0.236	39	6.9
30	5	7.60	1.14	0.228	1	0.228	41	6.9
35	5	8.66	1.06	0.213	1	0.213	44	6.9
40	5	9.80	1.14	0.228	1	0.228	41	6.9
45	5	10.91	1.10	0.220	1	0.220	42	6.9
50	5	12.17	1.26	0.252	1	0.252	37	6.9
55	5	13.39	1.22	0.244	1	0.244	38	6.9
60	5	14.61	1.22	0.244	1	0.244	38	6.9
65	5	15.98	1.38	0.276	1	0.276	33	6.9
70	5	17.52	1.54	0.307	1	0.307	29	6.9
75	5	19.06	1.54	0.307	1	0.307	29	6.9
80	5	20.59	1.54	0.307	1	0.307	29	6.9
85	5	21.89	1.30	0.260	1	0.260	35	6.9

Figure 6. Summarized Datasheet for DCP Test on P-152MR layer (Station 0+57.5, 0)

ASTM D6951 - Dynamic Cone Penetrometer (DCP)

Project: RC Outdoor Phase I
Section: N/A
Location: STA. 0+97.5, 0ft
Depth of Zero Point Below Surface (in): 8.19
Material Classification Option: All soils except for CL soils CBR<10 and CH soils
Material Type: P-152MR
Ground Conditions: Dry and free from contamination

Date: 7/26/18
Technician: James Keating
Hammer Weight (lbs.): 17.6 lbs (Dual Weight)
Weather: 74-90 F
Water Table Depth (ft): N/A
Moisture Content (%): 6.9
CBR Equation: CBR = 292/ (DCP × 25.4)^1.12

DCP Test Results

Total Number of Blows	Number of Blows (Between Test Readings)	Cumulative Penetration (in.)	Penetration Between Readings (in.)	Penetration per Blow	Hammer Factor (lbs.)	DCP Index (in.)/blow	CBR (%)	Moisture (%)
0	0	0.00	-	-	-	-	-	6.9
5	5	1.65	1.65	0.331	1	0.331	27	6.9
10	5	2.87	1.22	0.244	1	0.244	38	6.9
15	5	4.02	1.14	0.228	1	0.228	41	6.9
20	5	5.00	0.98	0.197	1	0.197	48	6.9
25	5	6.06	1.06	0.213	1	0.213	44	6.9
30	5	7.13	1.06	0.213	1	0.213	44	6.9
35	5	8.27	1.14	0.228	1	0.228	41	6.9
40	5	9.53	1.26	0.252	1	0.252	37	6.9
45	5	10.71	1.18	0.236	1	0.236	39	6.9
50	5	11.69	0.98	0.197	1	0.197	48	6.9
55	5	12.80	1.10	0.220	1	0.220	42	6.9
60	5	13.90	1.10	0.220	1	0.220	42	6.9
65	5	15.04	1.14	0.228	1	0.228	41	6.9
70	5	16.26	1.22	0.244	1	0.244	38	6.9
75	5	17.80	1.54	0.307	1	0.307	29	6.9
80	5	19.65	1.85	0.370	1	0.370	24	6.9
85	5	21.73	2.09	0.417	1	0.417	21	6.9

Figure 7. Summarized Datasheet for DCP Test on P-152MR layer (Station 0+97.5, 0)

ASTM D6951 - Dynamic Cone Penetrometer (DCP)

Project: RC Outdoor Phase I
Section: N/A
Location: STA. 1+07.5, 0ft
Depth of Zero Point Below Surface (in): 8.30
Material Classification Option: All soils except for CL soils CBR<10 and CH soils
Material Type: P-152MR
Ground Conditions: Dry and free from contamination

Date: 7/26/18
Technician: James Keating
Hammer Weight (lbs.): 17.6 lbs (Dual Weight)
Weather: 74-90 F
Water Table Depth (ft): N/A
Moisture Content (%): 6.9
CBR Equation: CBR = 292/ (DCP × 25.4)^1.12

DCP Test Results

Total Number of Blows	Number of Blows (Between Test Readings)	Cumulative Penetration (in.)	Penetration Between Readings (in.)	Penetration per Blow	Hammer Factor (lbs.)	DCP Index (in.)/blow	CBR (%)	Moisture (%)
0	0	0.00	-	-	-	-	-	6.9
5	5	1.50	1.50	0.299	1	0.299	30	6.9
10	5	2.56	1.06	0.213	1	0.213	44	6.9
15	5	3.70	1.14	0.228	1	0.228	41	6.9
20	5	4.84	1.14	0.228	1	0.228	41	6.9
25	5	6.10	1.26	0.252	1	0.252	37	6.9
30	5	7.28	1.18	0.236	1	0.236	39	6.9
35	5	8.70	1.42	0.283	1	0.283	32	6.9
40	5	10.08	1.38	0.276	1	0.276	33	6.9
45	5	11.46	1.38	0.276	1	0.276	33	6.9
50	5	12.83	1.38	0.276	1	0.276	33	6.9
55	5	14.02	1.18	0.236	1	0.236	39	6.9
60	5	15.16	1.14	0.228	1	0.228	41	6.9
65	5	16.38	1.22	0.244	1	0.244	38	6.9
70	5	17.52	1.14	0.228	1	0.228	41	6.9
75	5	18.66	1.14	0.228	1	0.228	41	6.9
80	5	19.72	1.06	0.213	1	0.213	44	6.9
85	5	20.71	0.98	0.197	1	0.197	48	6.9
90	5	21.73	1.02	0.205	1	0.205	46	6.9

Figure 8. Summarized Datasheet for DCP Test on P-152MR layer (Station 1+07.5, 0)

ASTM D6951 - Dynamic Cone Penetrometer (DCP)

Project: RC Outdoor Phase I
Section: N/A
Location: STA. 1+17.5, 0ft
Depth of Zero Point Below Surface (in): 8.32
Material Classification Option: All soils except for CL soils CBR<10 and CH soils
Material Type: P-152MR
Ground Conditions: Dry and free from contamination

Date: 7/26/18
Technician: James Keating
Hammer Weight (lbs.): 17.6 lbs (Dual Weight)
Weather: 74-90 F
Water Table Depth (ft): N/A
Moisture Content (%): 6.9
CBR Equation: CBR = 292/ (DCP × 25.4)^1.12

DCP Test Results

Total Number of Blows	Number of Blows (Between Test Readings)	Cumulative Penetration (in.)	Penetration Between Readings (in.)	Penetration per Blow	Hammer Factor (lbs.)	DCP Index (in.)/blow	CBR (%)	Moisture (%)
0	0	0.00	-	-	-	-	-	6.9
5	5	1.46	1.46	0.291	1	0.291	31	6.9
10	5	2.48	1.02	0.205	1	0.205	46	6.9
15	5	3.46	0.98	0.197	1	0.197	48	6.9
20	5	4.41	0.94	0.189	1	0.189	50	6.9
25	5	5.39	0.98	0.197	1	0.197	48	6.9
30	5	6.38	0.98	0.197	1	0.197	48	6.9
35	5	7.40	1.02	0.205	1	0.205	46	6.9
40	5	8.46	1.06	0.213	1	0.213	44	6.9
45	5	9.57	1.10	0.220	1	0.220	42	6.9
50	5	10.71	1.14	0.228	1	0.228	41	6.9
55	5	11.89	1.18	0.236	1	0.236	39	6.9
60	5	13.11	1.22	0.244	1	0.244	38	6.9
65	5	14.25	1.14	0.228	1	0.228	41	6.9
70	5	15.51	1.26	0.252	1	0.252	37	6.9
75	5	16.65	1.14	0.228	1	0.228	41	6.9
80	5	17.48	0.83	0.165	1	0.165	59	6.9
85	5	18.23	0.75	0.150	1	0.150	65	6.9
90	5	18.86	0.63	0.126	1	0.126	79	6.9
95	5	19.53	0.67	0.134	1	0.134	74	6.9
100	5	20.00	0.47	0.094	1	0.094	100	6.9
105	5	20.39	0.39	0.079	1	0.079	100	6.9
110	5	20.71	0.31	0.063	1	0.063	100	6.9
115	5	20.91	0.20	0.039	1	0.039	100	6.9
120	5	21.30	0.39	0.079	1	0.079	100	6.9
125	5	21.73	0.43	0.087	1	0.087	100	6.9

Figure 9. Summarized Datasheet for DCP Test on P-152MR layer (Station 1+17.5, 0)

ASTM D6951 - Dynamic Cone Penetrometer (DCP)

Project: RC Outdoor Phase I
Section: N/A
Location: STA. 1+27.5, 0ft
Depth of Zero Point Below Surface (in): 8.23
Material Classification Option: All soils except for CL soils CBR<10 and CH soils
Material Type: P-152MR
Ground Conditions: Dry and free from contamination

Date: 7/26/18
Technician: James Keating
Hammer Weight (lbs.): 17.6 lbs (Dual Weight)
Weather: 74-90 F
Water Table Depth (ft): N/A
Moisture Content (%): 6.9
CBR Equation: CBR = 292/ (DCP × 25.4)^1.12

DCP Test Results

Total Number of Blows	Number of Blows (Between Test Readings)	Cumulative Penetration (in.)	Penetration Between Readings (in.)	Penetration per Blow	Hammer Factor (lbs.)	DCP Index (in.)/blow	CBR (%)	Moisture (%)
0	0	0.00	-	-	-	-	-	6.9
5	5	2.05	2.05	0.409	1	0.409	21	6.9
10	5	3.43	1.38	0.276	1	0.276	33	6.9
15	5	4.57	1.14	0.228	1	0.228	41	6.9
20	5	5.71	1.14	0.228	1	0.228	41	6.9
25	5	6.89	1.18	0.236	1	0.236	39	6.9
30	5	8.07	1.18	0.236	1	0.236	39	6.9
35	5	9.13	1.06	0.213	1	0.213	44	6.9
40	5	10.04	0.91	0.181	1	0.181	53	6.9
45	5	10.87	0.83	0.165	1	0.165	59	6.9
50	5	11.73	0.87	0.173	1	0.173	56	6.9
55	5	12.52	0.79	0.157	1	0.157	62	6.9
60	5	13.50	0.98	0.197	1	0.197	48	6.9
65	5	14.76	1.26	0.252	1	0.252	37	6.9
70	5	16.06	1.30	0.260	1	0.260	35	6.9
75	5	17.17	1.10	0.220	1	0.220	42	6.9
80	5	18.11	0.94	0.189	1	0.189	50	6.9
85	5	19.02	0.91	0.181	1	0.181	53	6.9
90	5	19.84	0.83	0.165	1	0.165	59	6.9
95	5	20.71	0.87	0.173	1	0.173	56	6.9
100	5	21.69	0.98	0.197	1	0.197	48	6.9

Figure 10. Summarized Datasheet for DCP Test on P-152MR layer (Station 1+27.5, 0)

ASTM D6951 - Dynamic Cone Penetrometer (DCP)

Project: RC Outdoor Phase I
Section: N/A
Location: STA. 1+37.5, 0ft
Depth of Zero Point Below Surface (in): 8.35
Material Classification Option: All soils except for CL soils CBR<10 and CH soils
Material Type: P-152MR
Ground Conditions: Dry and free from contamination

Date: 7/26/18
Technician: James Keating
Hammer Weight (lbs.): 17.6 lbs (Dual Weight)
Weather: 74-90 F
Water Table Depth (ft): N/A
Moisture Content (%): 6.9
CBR Equation: CBR = 292/ (DCP × 25.4)^1.12

DCP Test Results

Total Number of Blows	Number of Blows (Between Test Readings)	Cumulative Penetration (in.)	Penetration Between Readings (in.)	Penetration per Blow	Hammer Factor (lbs.)	DCP Index (in.)/blow	CBR (%)	Moisture (%)
0	0	0.00	-	-	-	-	-	6.9
5	5	1.73	1.73	0.346	1	0.346	26	6.9
10	5	2.76	1.02	0.205	1	0.205	46	6.9
15	5	3.86	1.10	0.220	1	0.220	42	6.9
20	5	5.00	1.14	0.228	1	0.228	41	6.9
25	5	6.30	1.30	0.260	1	0.260	35	6.9
30	5	7.48	1.18	0.236	1	0.236	39	6.9
35	5	8.66	1.18	0.236	1	0.236	39	6.9
40	5	9.92	1.26	0.252	1	0.252	37	6.9
45	5	11.10	1.18	0.236	1	0.236	39	6.9
50	5	12.48	1.38	0.276	1	0.276	33	6.9
55	5	13.82	1.34	0.268	1	0.268	34	6.9
60	5	15.20	1.38	0.276	1	0.276	33	6.9
65	5	16.46	1.26	0.252	1	0.252	37	6.9
70	5	17.72	1.26	0.252	1	0.252	37	6.9
75	5	18.78	1.06	0.213	1	0.213	44	6.9
80	5	19.84	1.06	0.213	1	0.213	44	6.9
85	5	21.42	1.57	0.315	1	0.315	28	6.9

Figure 11. Summarized Datasheet for DCP Test on P-152MR layer (Station 1+37.5, 0)

ASTM D6951 - Dynamic Cone Penetrometer (DCP)

Project: RC Outdoor Phase I
Section: N/A
Location: STA. 1+47.5, 0ft
Depth of Zero Point Below Surface (in): 8.77
Material Classification Option: All soils except for CL soils CBR<10 and CH soils
Material Type: P-152MR
Ground Conditions: Dry and free from contamination

Date: 7/26/18
Technician: James Keating
Hammer Weight (lbs.): 17.6 lbs (Dual Weight)
Weather: 74-90 F
Water Table Depth (ft): N/A
Moisture Content (%): 6.9
CBR Equation: CBR = 292/ (DCP × 25.4)^1.12

DCP Test Results

Total Number of Blows	Number of Blows (Between Test Readings)	Cumulative Penetration (in.)	Penetration Between Readings (in.)	Penetration per Blow	Hammer Factor (lbs.)	DCP Index (in.)/blow	CBR (%)	Moisture (%)
0	0	0.00	-	-	-	-	-	6.9
5	5	2.24	2.24	0.449	1	0.449	19	6.9
10	5	3.74	1.50	0.299	1	0.299	30	6.9
15	5	4.88	1.14	0.228	1	0.228	41	6.9
20	5	5.75	0.87	0.173	1	0.173	56	6.9
25	5	6.77	1.02	0.205	1	0.205	46	6.9
30	5	7.87	1.10	0.220	1	0.220	42	6.9
35	5	9.02	1.14	0.228	1	0.228	41	6.9
40	5	9.96	0.94	0.189	1	0.189	50	6.9
45	5	10.71	0.75	0.150	1	0.150	65	6.9
50	5	11.65	0.94	0.189	1	0.189	50	6.9
55	5	12.99	1.34	0.268	1	0.268	34	6.9
60	5	14.25	1.26	0.252	1	0.252	37	6.9
65	5	15.55	1.30	0.260	1	0.260	35	6.9
70	5	16.81	1.26	0.252	1	0.252	37	6.9
75	5	18.11	1.30	0.260	1	0.260	35	6.9
80	5	19.41	1.30	0.260	1	0.260	35	6.9
85	5	20.79	1.38	0.276	1	0.276	33	6.9
90	5	21.97	1.18	0.236	1	0.236	39	6.9

Figure 12. Summarized Datasheet for DCP Test on P-152MR layer (Station 1+47.5, 0)

Dynamic Cone Penetrometer Test Results for Location: STA. 0+07.5, 0ft

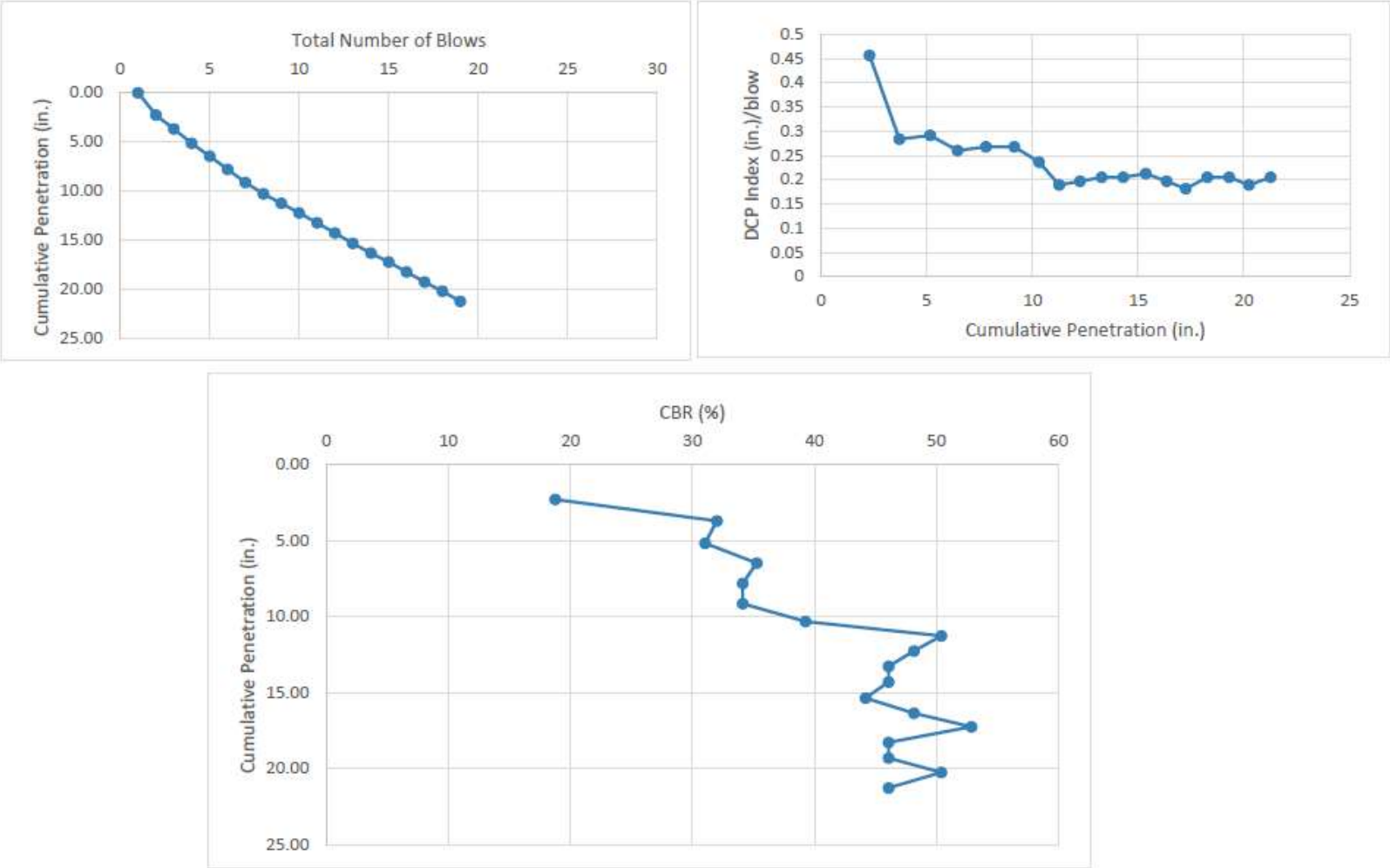

Figure 13. Plots from the DCP Test on P-152MR layer (Station 0+07.5, 0)

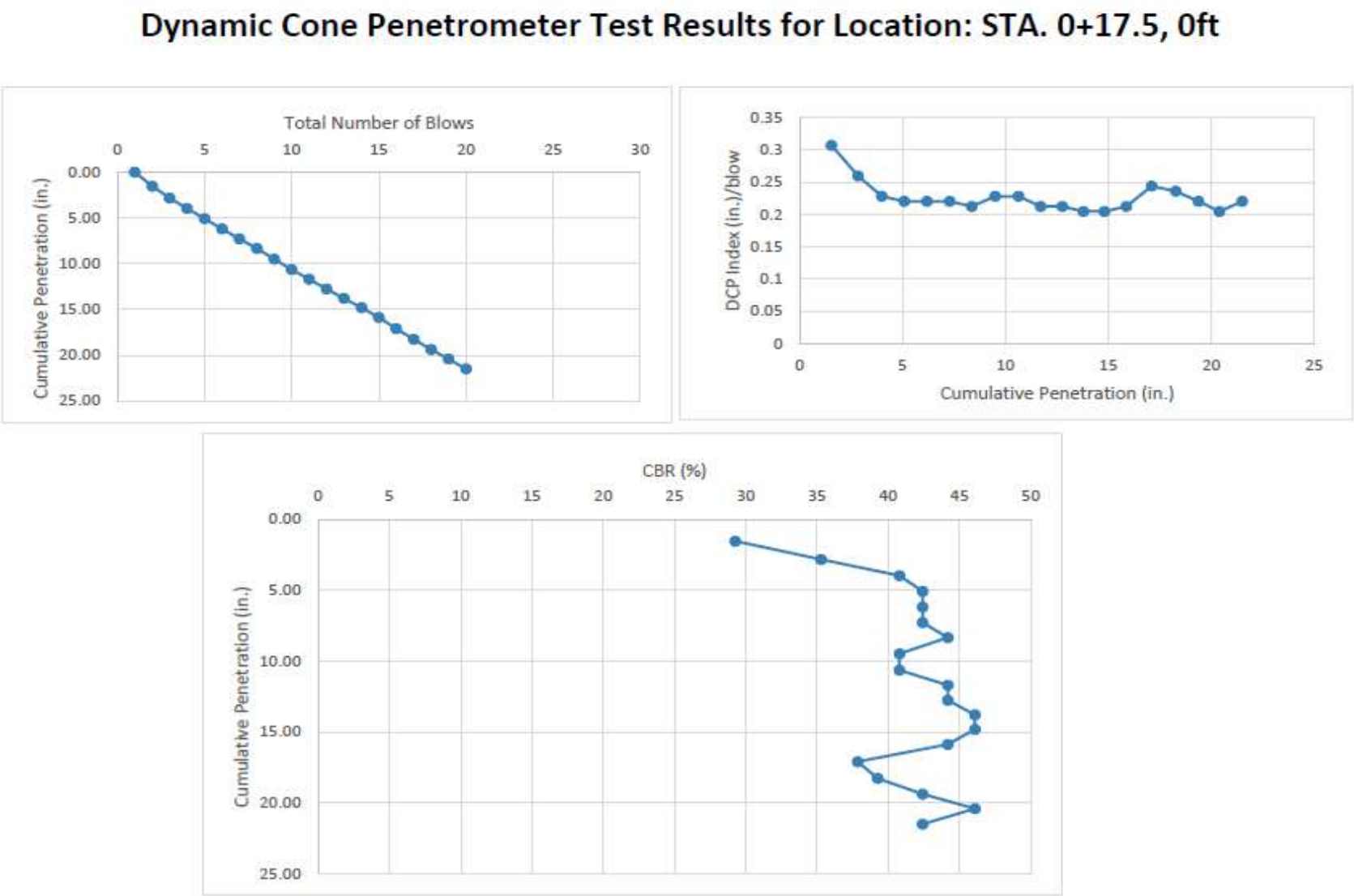

Figure 14. Plots from the DCP Test on P-152MR layer (Station 0+17.5, 0)

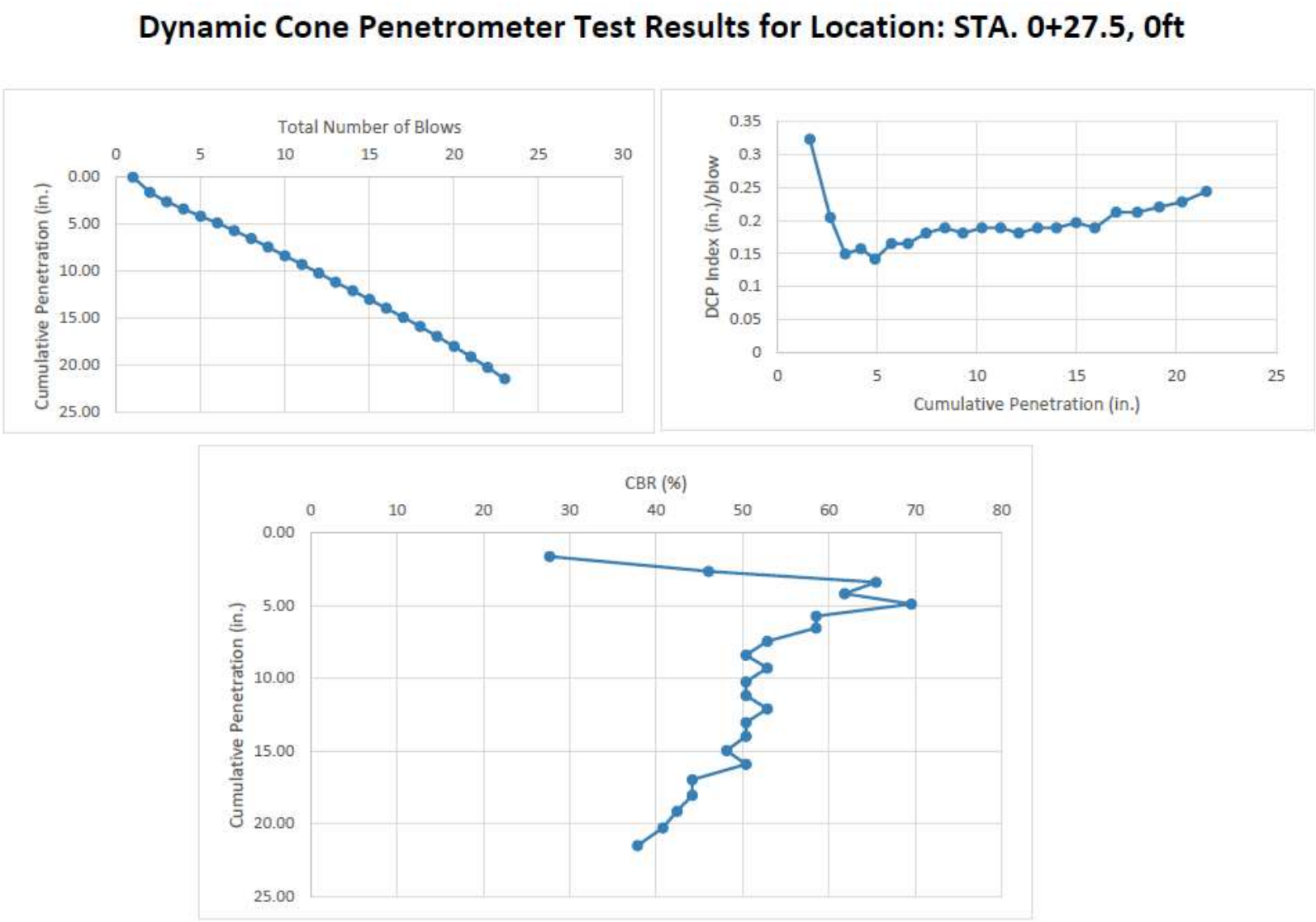

Figure 15. Plots from the DCP Test on P-152MR layer (Station 0+27.5, 0)

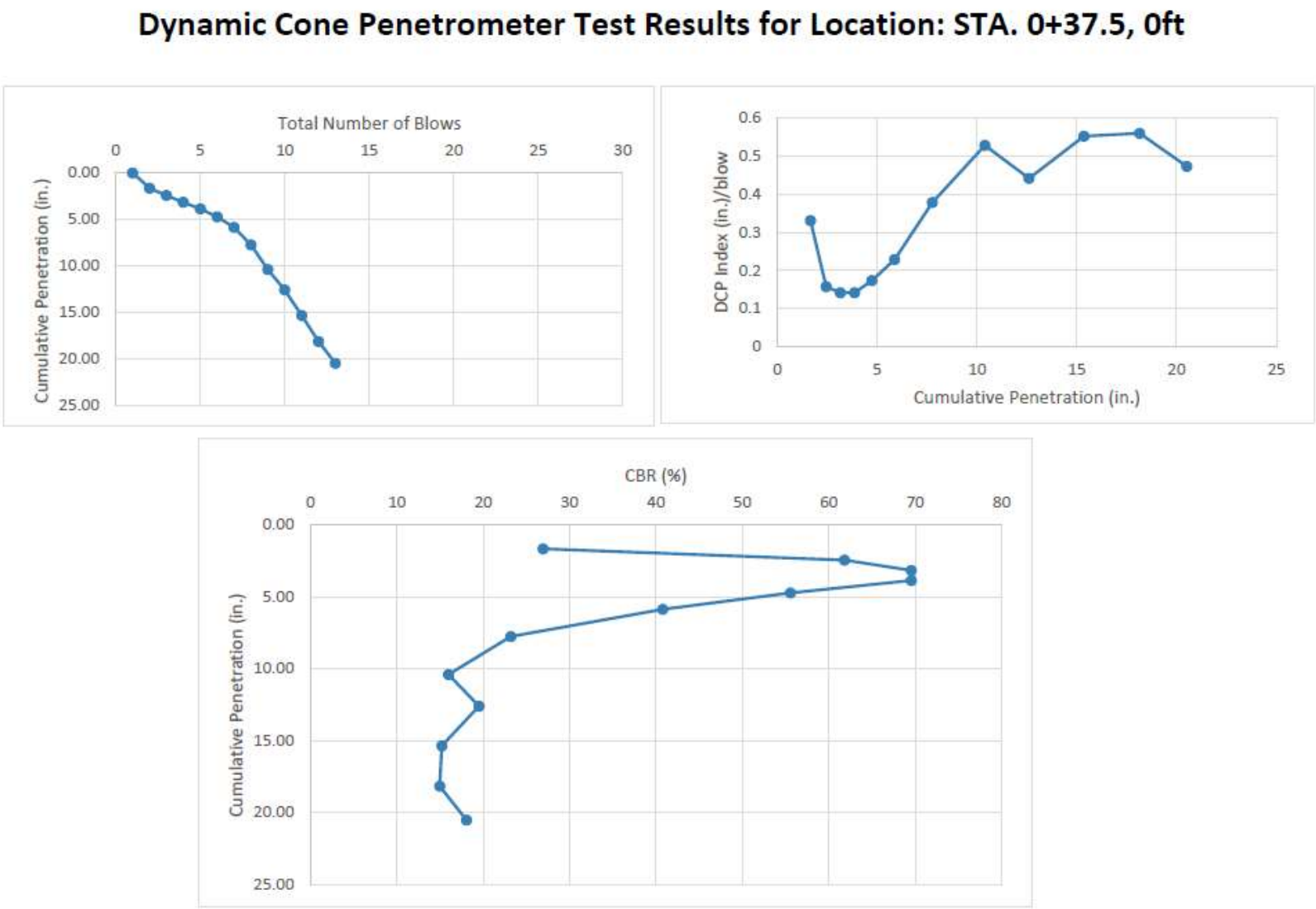

Figure 16. Plots from the DCP Test on P-152MR layer (Station 0+37.5, 0)

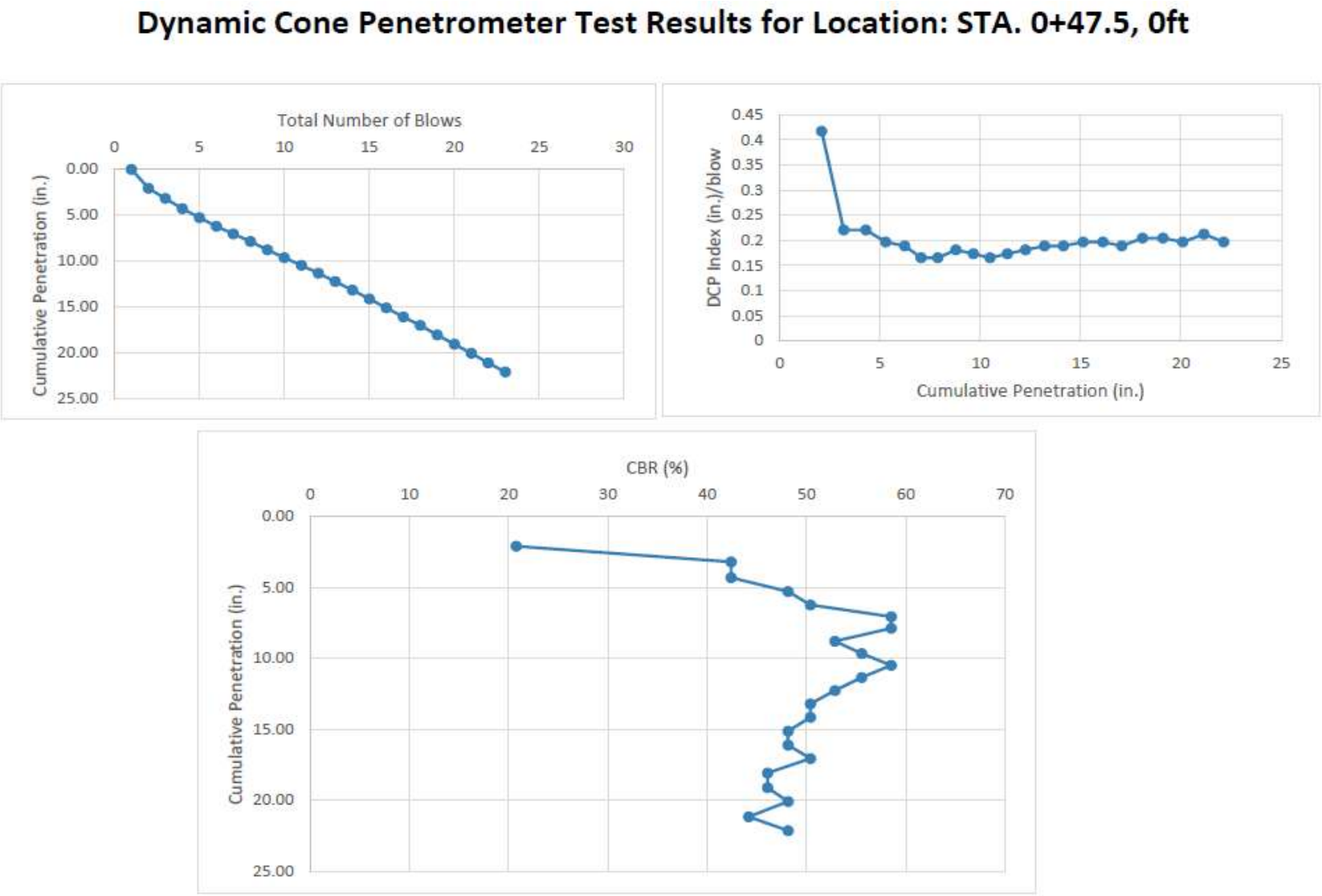

Figure 17. Plots from the DCP Test on P-152MR layer (Station 0+47.5, 0)

Dynamic Cone Penetrometer Test Results for Location: STA. 0+57.5, 0ft

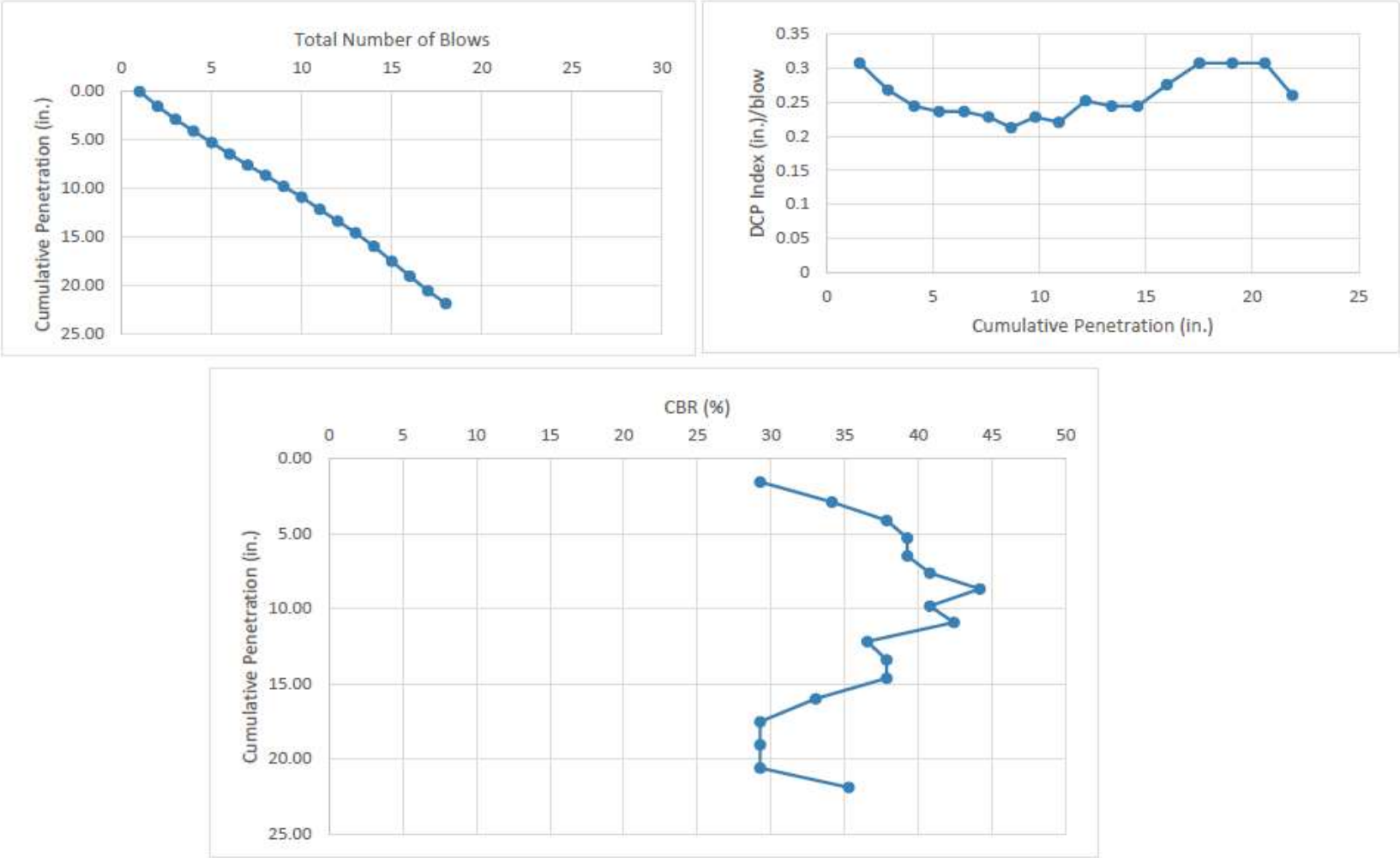

Figure 18. Plots from the DCP Test on P-152MR layer (Station 0+57.5, 0)

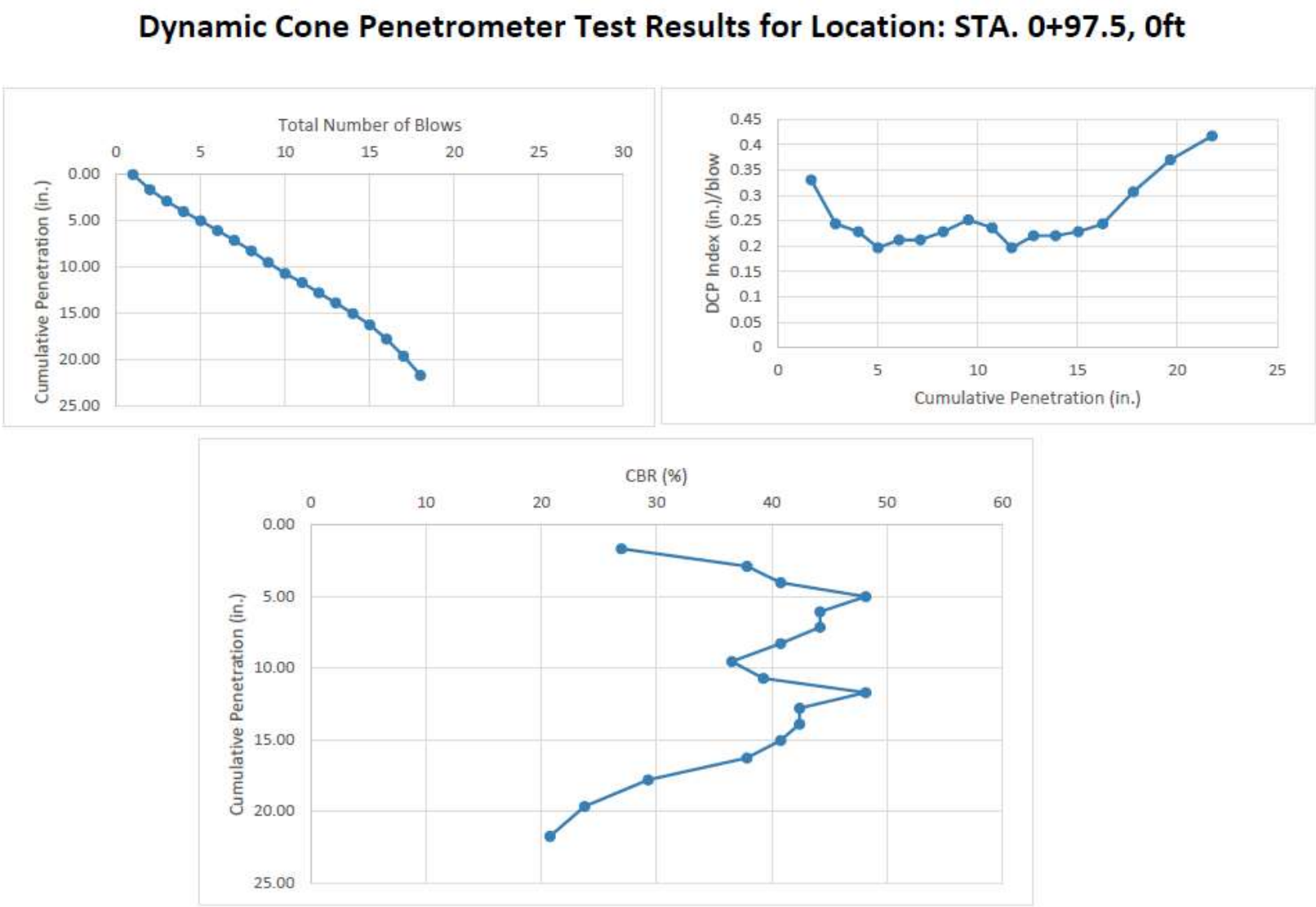

Figure 19. Plots from the DCP Test on P-152MR layer (Station 0+97.5, 0)

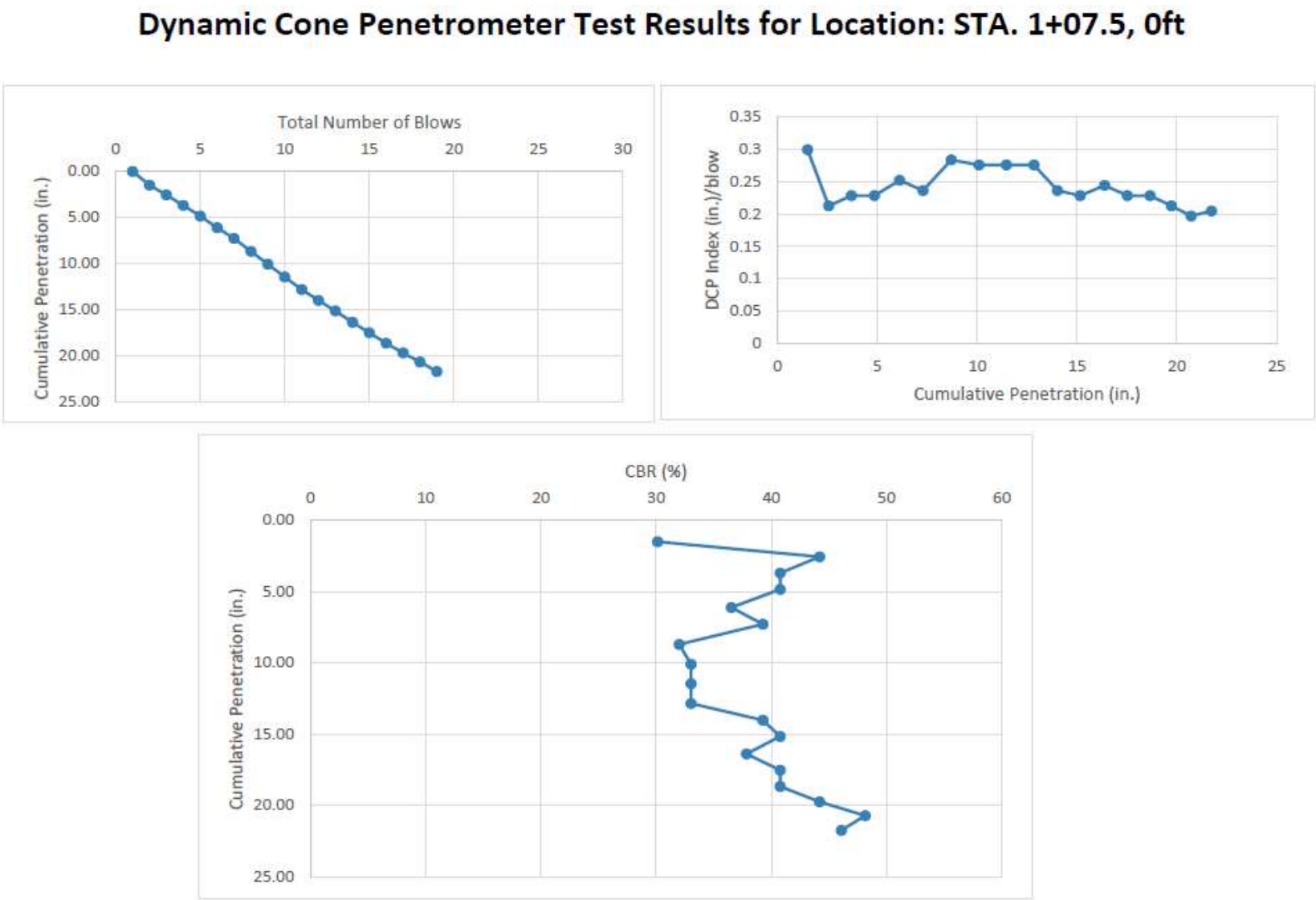

Figure 20. Plots from the DCP Test on P-152MR layer (Station 1+07.5, 0)

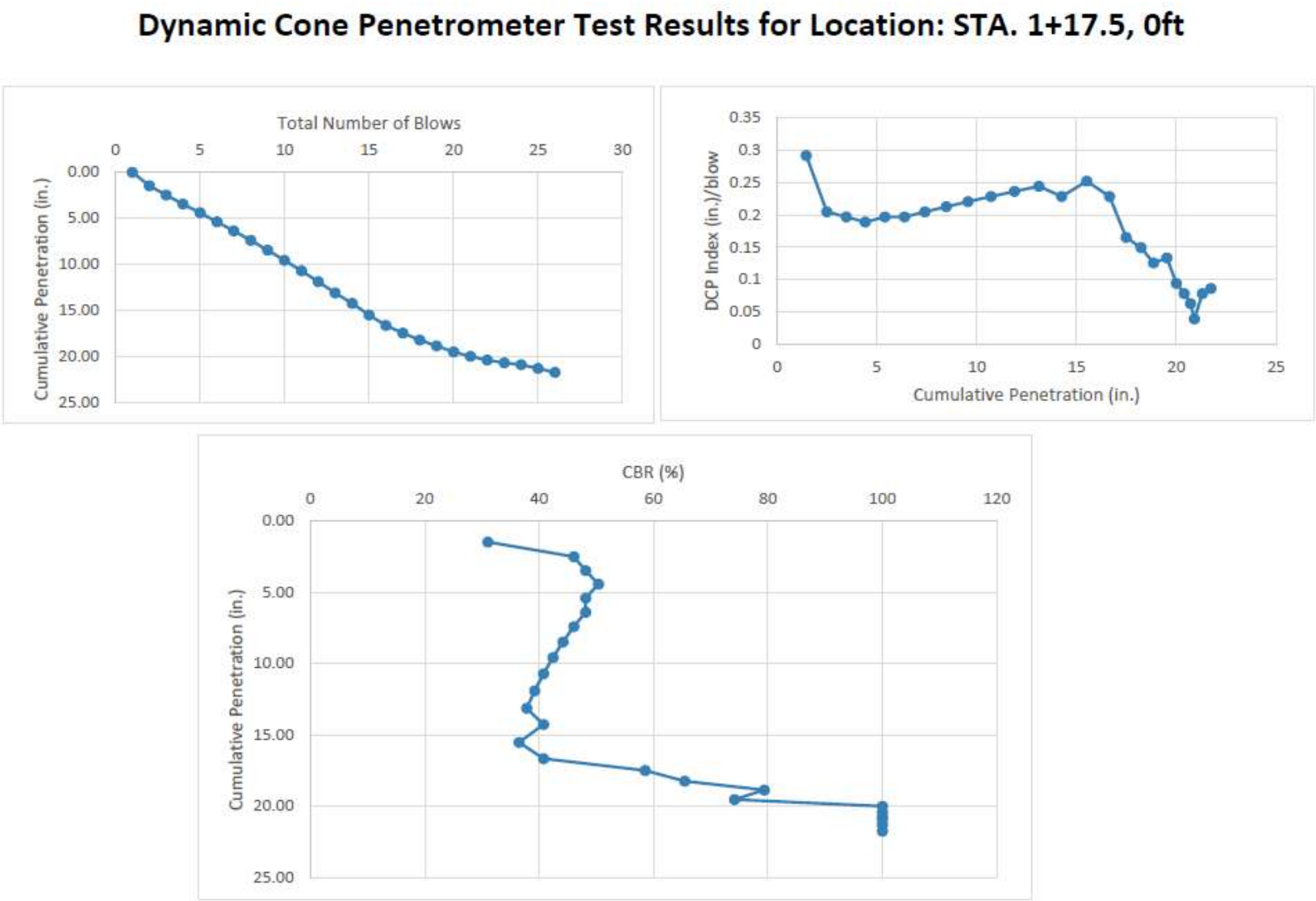

Figure 21. Plots from the DCP Test on P-152MR layer (Station 1+17.5, 0)

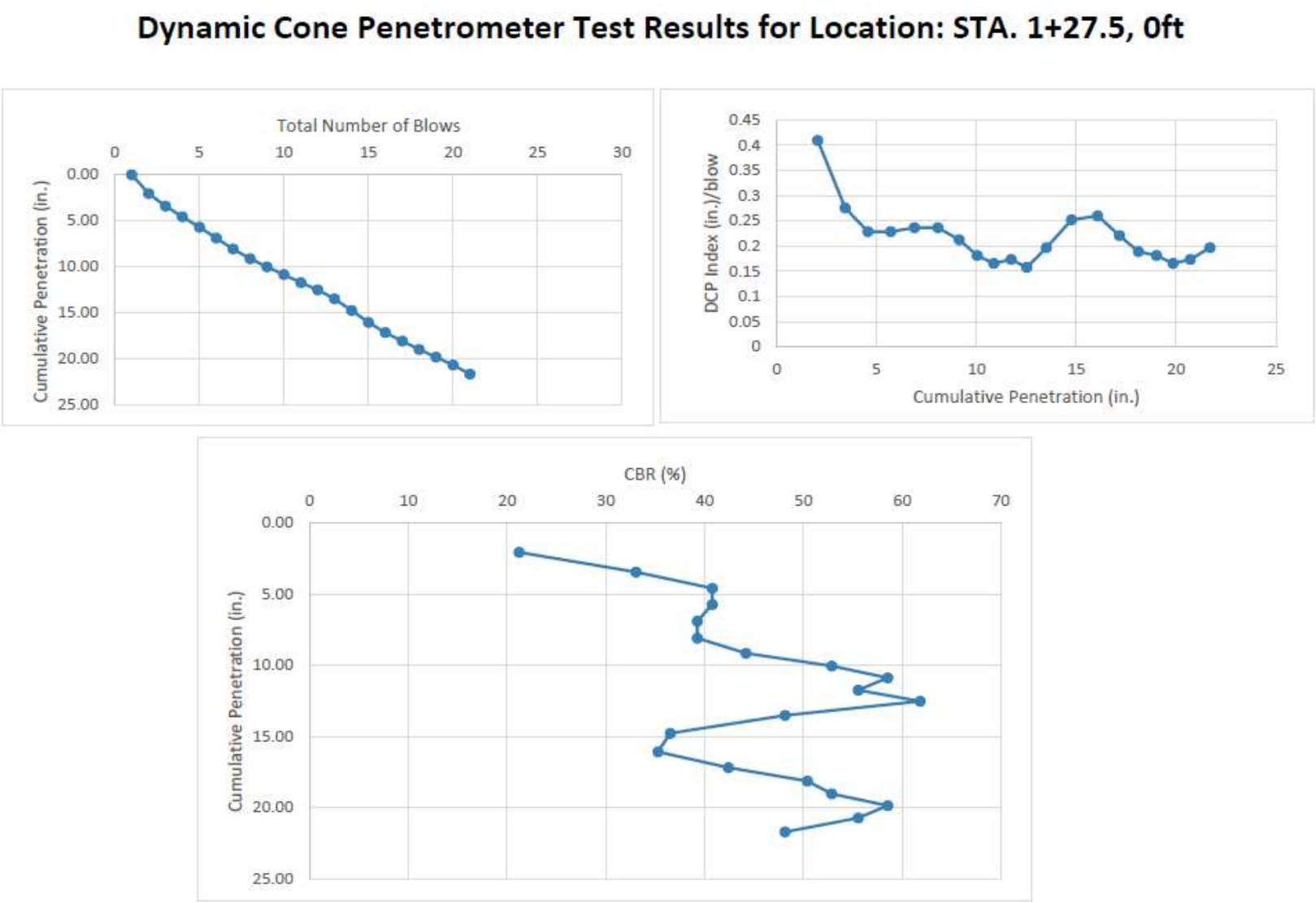

Figure 22. Plots from the DCP Test on P-152MR layer (Station 1+27.5, 0)

Dynamic Cone Penetrometer Test Results for Location: STA. 1+37.5, 0ft

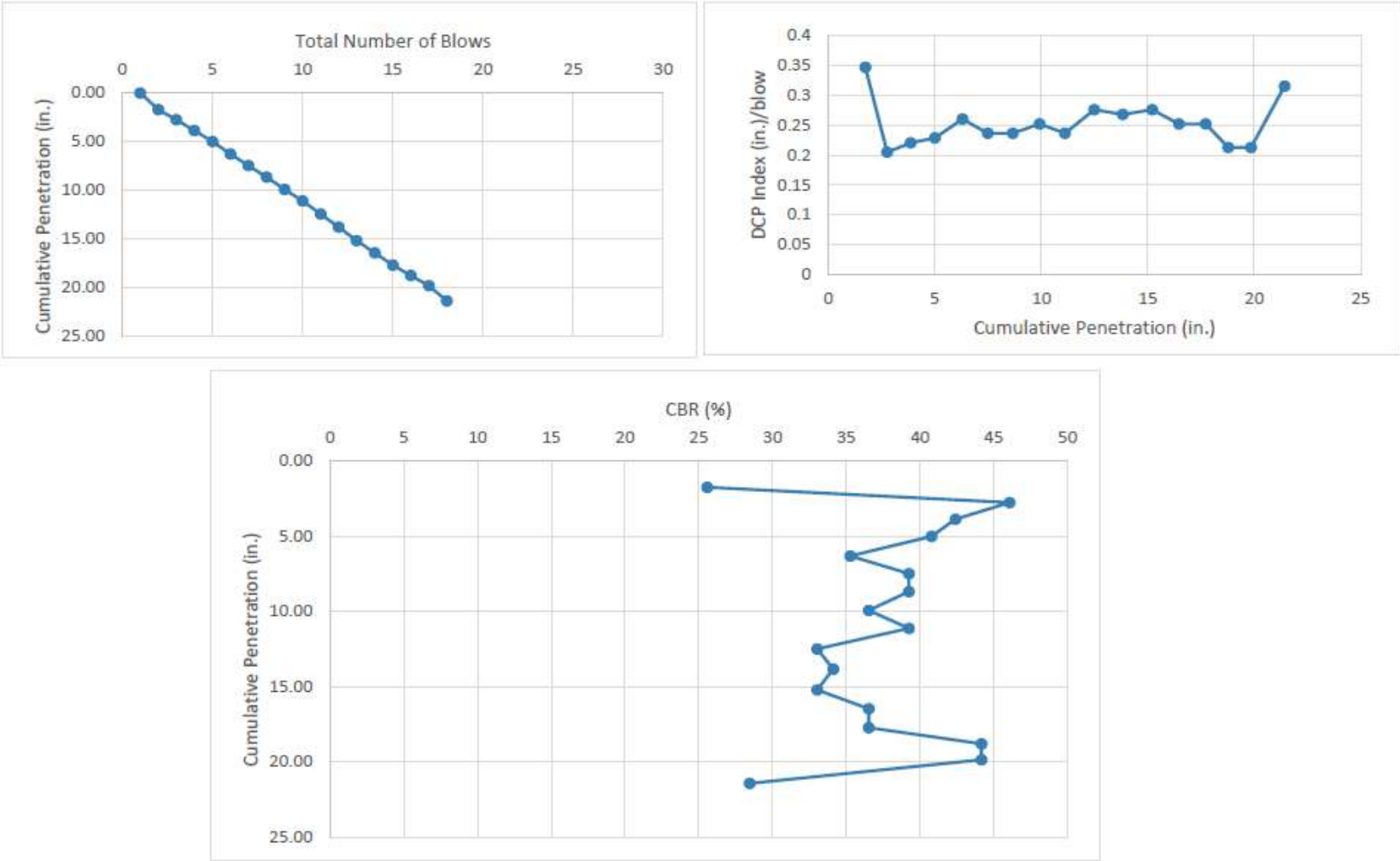

Figure 23. Plots from the DCP Test on P-152MR layer (Station 1+37.5, 0)

Dynamic Cone Penetrometer Test Results for Location: STA. 1+47.5, 0ft

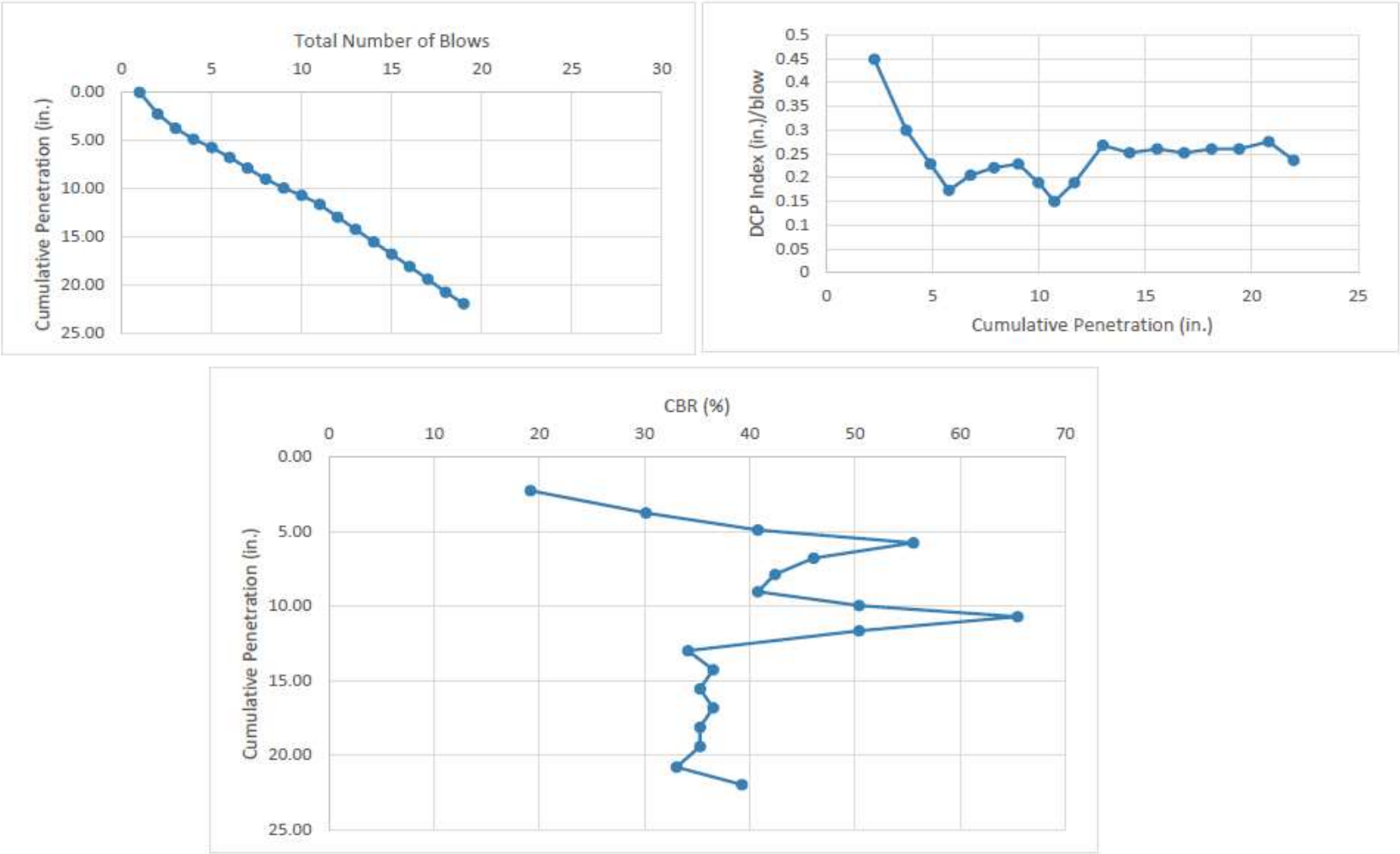

Figure 24. Plots from the DCP Test on P-152MR layer (Station 1+47.5, 0)

LABORATORY TEST RESULTS

COMPACTION TEST REPORT

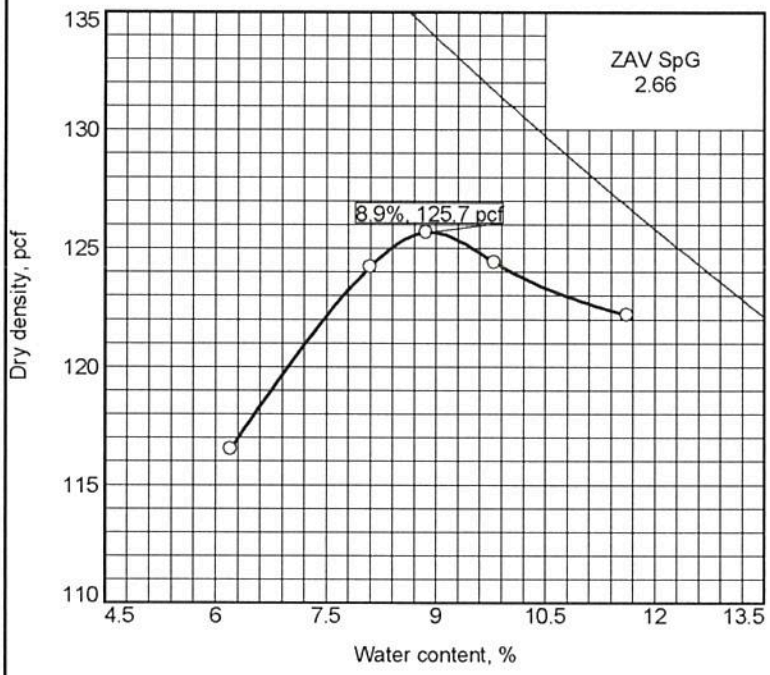

Curve No.

Test Specification:
ASTM D 1557-07 Method A Modified

Preparation Method Dry
Hammer Wt. 10 lb.
Hammer Drop 18 in.
Number of Layers five
Blows per Layer 25
Mold Size 0.03333 cu. ft.

Test Performed on Material Passing #4 **Sieve**

NM ____ **LL** ____ **PI** ____
Sp.G. (ASTM D 854) 2.658
%>#4 0.1 **%<No.200** 19.1
USCS SM/SC **AASHTO** ____
Date Sampled 6/21/18
Date Tested 6/20/18
Tested By RHN

TESTING DATA

	1	2	3	4	5	6
WM + WS	6256.1	6415.3	6453.7	6450.4	6447.4	
WM	4385.4	4385.4	4385.4	4385.4	4385.4	
WW + T #1	259.3	297.6	232.8	451.9	333.0	
WD + T #1	254.5	287.3	222.3	428.6	317.1	
TARE #1	177.1	160.1	103.8	190.8	180.3	
WW + T #2						
WD + T #2						
TARE #2						
MOISTURE	6.2	8.1	8.9	9.8	11.6	
DRY DENSITY	116.5	124.2	125.7	124.4	122.2	

TEST RESULTS

Maximum dry density = 125.7 pcf

Optimum moisture = 8.9 %

Project No. **Client:**
Project: Outdoor Reflective Cracking Phase 1
TO #15
○ **Source of Sample:** Native Subgrade

Federal Aviation Administration

Atlantic City, New Jersey

Material Description

Orange silty/clayey sand

Remarks:
Specific gravity is assumed based on ASTM D854

Checked by: MATTHEW T BRYNICK
Title: Laboratory Manager

LICENSED PROFESSIONAL ENGINEER
MATTHEW T BRYNICK
062-065280
OF ILLINOIS

Figure

Sieve Analysis of Aggregates and Soils
ASTM C117 & C136

National Airport Pavement Test Facility
William J. Hughes Technical Center
Atlantic City International Airport
New Jersey 08405

Project: RCO P1 - TO #15 **Date:** 6/21/2018
Section:
Description: Native Subgade
Orange silty sand
Sample No: 1 Procedure: A - Washing with Plain Water
Technician: RHN Prof. Engineer: MTB

LICENSED PROFESSIONAL ENGINEER MATTHEW T BRYNICK 062.065880 OF 776.5

Pan No:	X	**Pan Mass (g):**	776.5
Oven Dry + Pan Mass (g):	3297.4	**Washed + Pan Mass (g):**	2824.7
Original Sample Oven Dry Mass (g):	2520.9	**Washed Mass (g):**	2048.2

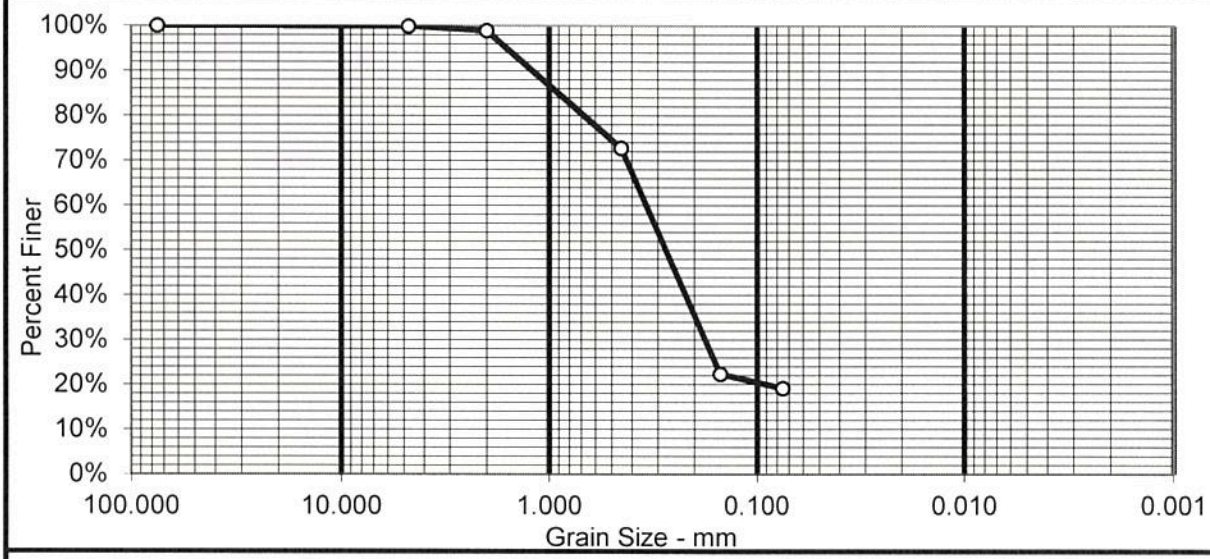

Sieve Size (US inches)	Opening Size (mm)	Retained Mass (g)	Cumulative Mass (g)	Individual Percent Retained	Cumulative Percent Retained	Percent Passing
3/8	75	0	0.0	0.0%	0.0%	100.0%
No. 4	4.75	2.8	2.8	0.1%	0.1%	99.9%
No. 10	2.00	25.7	28.5	1.3%	1.1%	98.9%
No. 40	0.450	659.9	688.4	32.2%	27.3%	72.7%
No. 100	0.150	1271	1959.4	62.1%	77.7%	22.3%
No. 200	0.075	80.9	2040.3	3.9%	80.9%	19.1%
PAN		3.7	2044.0	0.2%	81.1%	-

Percent Loss by Washing: 18.8%
Percent Loss of Sieved Material: 0.00%

Atterberg Limits
PL: NP
LL: NV
PI: NP

Coefficients
D_{90}: 1.1834 D_{85}: 0.8803 D_{60}: 0.327
D_{50}: 0.266 D_{30}: 0.176 D_{15}:
D_{10}: C_U: C_C:

Classification
USCS: SM **AASHTO:** A-2-4(0)

Remarks: Organics present
NP = Non-Plastic, NV = No Value

Revised: 5/30/2018

Uncompacted Void Content of Fine Aggregate - Test Method A
ASTM C1252

National Airport Pavement Test Facility William J. Hughes Technical Center
Atlantic City International Airport
New Jersey 08405

Project:	RCO P1 TO #15	Section:	P-152MR
Technician:	Renee' Norcross	Date:	7/18/2018
Professional Engineer:	Matthew Brynick	Client:	FAA-ATRD

Sample No.	1	2	
Source	Native P-152 Subgrade	Native P-152 Subgrade	
Density of Fine Aggregate, g/cm^3 [G]	2.639	2.639	
Volume of Cylindrical Measure, cm^3 [V]	100.1	100.1	
Mass of Cylindrical Measure, g [M]	188.73	188.73	
Mass of Cylindrical Measure with Fine Aggregate, g [F+M]	341.54	341.71	
Mass of Fine Aggregate, g [F]	152.81	152.98	
Uncompacted Voids in Material, % [U_s]	42.2	42.1	
Average Uncompacted Voids in Material (%)	42.1		

Remarks:

SUMMARY OF RESILIENT MODULUS AND QUICK SHEAR TESTS

Table F1. Resilient Modulus Test Results on P-152MR Material

ID	ρ_{dry} (pcf)	w (%)	$M_{R\text{-}min}$ (psi)	$M_{R\text{-}max}$ (psi)	k_1	k_2	k_3	S_e/S_y	R^2_{Adj}
1	123.2	10.2	10,994	18,014	1,170	0.525	-1.859	0.251	0.93
5	119.4	10.1	11,937	20,421	1,293	0.577	-1.936	0.147	0.97
3	117.8	9.7	15,360	26,571	1,800	0.398	-2.222	0.345	0.86
Avg.	**120.1**	**10.0**	**12,764**	**21,669**	**1,421**	**0.500**	**-2.006**	**0.247**	**0.92**

ρ_{dry} = dry density of the specimen;
w = moisture content at the end of test;
$M_{R\text{-}min}$ = minimum measured modulus;
$M_{R\text{-}max}$ = maximum measured modulus;
k_1, k_2, k_3 = regression constants;
S_e/S_y = standard error ratio; and
R^2_{Adj} = adjusted coefficient of determination;

Table F2. Quick Shear Test Results on P-152MR Material

Specimen	Compaction Condition		Quick Shear		
ID	ρ_{dry} (pcf)	w (%)	σ_3 (psi)	$\varepsilon_{v\text{-}max}$ (%)	$\sigma_{d\text{-}max}$ (psi)
1	123.2	10.2	5	2.15	31
4	118.6	9.5		3.23	27
7	117.3	10.0		2.15	31
Average				2.51	29
2	117.6	9.5	10	2.54	43
5	119.4	10.1		4.46	41
8	117.4	9.9		3.68	40
Average				3.56	41
3	117.8	9.7	15	3.47	57
6	117.3	10.0		3.88	53
9	117.2	9.9		4.19	56
Average				3.85	55

σ_3 = confining pressure for quick shear test;
$\sigma_{d\text{-}max}$ = maximum deviator stress from quick shear test; and
$\varepsilon_{v\text{-}max}$ = vertical strain at maximum deviator strain.

Sample No.	1	2	3
Max. Total Vertical Stress (psi)	34.4	51.2	70.2
Total Confining Stress (psi)	5.0	10.0	15.0

Strength Parameters	
Cohesion (psi)	4.5
Friction Angle (°)	33.8

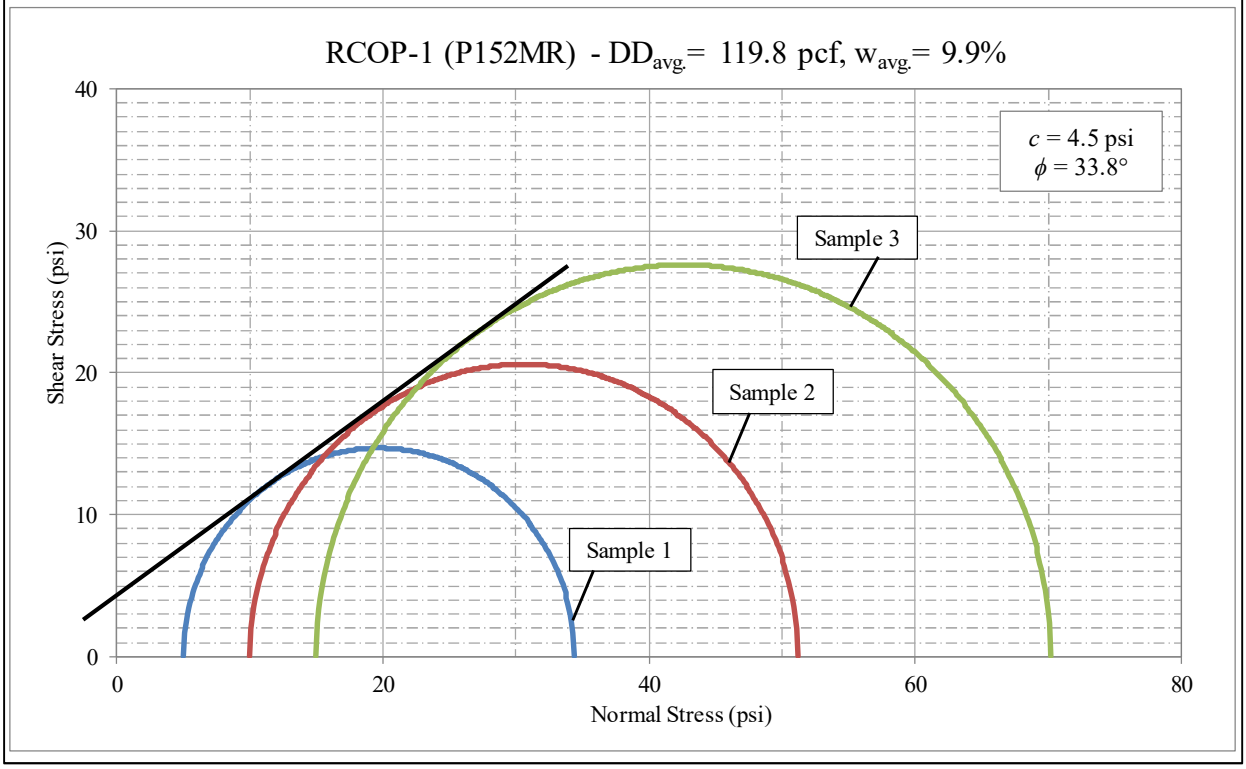

Figure F1. Mohr-Coulomb Failure Envelopes for the P-152MR Material

APPENDIX G

P-154MR Material Testing

	NATIONAL AIRPORT PAVEMENT TEST FACILITY TRANSMITTAL OF SHOP DRAWINGS, EQUIPMENT DATA, MATERIAL SAMPLES, OR MANUFACTURER'S CERTIFICATES OF COMPLIANCE	**National Airport Pavement Test Facility** **William J. Hughes Technical Center** **Atlantic City International Airport** **New Jersey 08405**

Task Order:	Task Order 015		**Date Submitted:**	09/20/2018
Project Name:	Reflective Cracking (Outdoor Phase I)		**Specification No.:**	P-152MR
Transmittal Description:	P-152 Subgrade Acceptance Recommendation		**Source:**	
Transmittal Purpose:	For Information Only		**Transmittal Type:**	Re-Submittal

Item No.:	**Description:**	**Variation:**	**Contractor Recommendation:**
1	Subgrade Compaction and Final Elevation Results		A

Contractor Remarks:

1	Compaction results from AM to PM readings both averaged over 95% for the (15) tests performed each time. The material was re-compacted after the AM tests a total of (16) passes for the entire section and an additional (25) times in the small area with AM readings below 95%. The average compaction percent dropped from 96.3% in the AM to 95.3% in the PM.	Approved 7/26/18
2	Elevation results show a few spots lower than the tolerance (0.042') but a minimum 8" pf P-154 will be present throughout the test section. A majority of the spots out of the tolerance range from 1/8" to 1/4" deeper than required.	Approved 7/26/18
3	Pages 2-5 are testing results from the AM, Pages 6-8 are from the afternoon and shown on elevation map.	Approved 7/26/18
4		Approved 7/26/18
5		Approved 7/26/18
6		**Additional Information**
7		
8		
9		
10		

Contractor Approval Actions:

Janine Abyad	09/20/2018
Contractor Name & Signature	***Date***

FAA Review Action Codes:

	"A" - Approved as Submitted; Completed
	"B" - Approved, except as noted on drawings; Completed
	"C" - Approved, resubmission required
	"D" - Returned by Correspondence; Completed
	"E" - Disapproved (see attached); Resubmit
	"F" - Receipt Acknowledged; Completed
	"G" - Other (Specify); Resubmit
	"X" - Receipt Acknowledged, does not comply; Resubmit

FAA Approval Actions:

FAA Name & Signature	***Date***

Additional FAA Comments:

1	
2	
3	
4	
5	

CRAIG
TESTING LABORATORIES, INC.
5439 Harding Highway • P.O. Box 427 • Mays Landing, NJ 08330-0427 • (609) 625-1700 • FAX (609) 625-1798

CLIENT: General Dynamics Information Technology

PROJECT NO.: 811092-3

PROJECT: Reflective Cracking Outdoor Phase I, Building 296 Outdoors, William J. Hughes Technical Center

REPORT NO.: FD-18

INSPECTED BY: Robert D. Barrett

DATE INSPECTED: July 17, 2018

GEOTECHNICAL REPORT BY: N/A

DATED: N/A

EARTHWORK FIELD INSPECTION REPORT

Item Inspected: ☐ Building Pad ☐ Slab ☐ Foundation ☐ Other: _____
☐ Utility Trench ☐ Sub-Grade ☑ Pavement Sub-Base Compactor Model: Caterpillar PS-300C

	Location	Dry Density (pcf)	Percent Moisture	Proctor (pcf) ASTM D1557	Optimum Moisture (%)	Compaction Required (%)	Percent Compaction
1	Station 10.0, Offset 3.00, 4" Depth	136.4	7.5	130.8	7.2	100.0	104.3%
2	Station 15.5, Offset 2.50, 4" Depth	137.4	6.7	130.8	7.2	100.0	105.0%
3	Station 89.0, Offset -2.00, 4" Depth	133.1	8.9	130.8	7.2	100.0	101.8%
4	Station 96.5, Offset -3.00, 4" Depth	136.8	7.2	130.8	7.2	100.0	104.6%
5	Station 136.0, Offset 0.00, 4" Depth	136.4	6.9	130.8	7.2	100.0	104.3%
6	Station 150.0, Offset 0.50, 4" Depth	136.9	6.6	130.8	7.2	100.0	104.7%
7	Station 10.0, Offset 3.00, 6" Depth	136.0	7.4	130.8	7.2	100.0	104.0%
8	Station 15.5, Offset 2.50, 6" Depth	134.9	7.2	130.8	7.2	100.0	103.1%
9	Station 89.0, Offset -2.00, 6" Depth	134.7	8.4	130.8	7.2	100.0	103.0%
10	Station 96.5, Offset -3.00, 6" Depth	136.6	7.2	130.8	7.2	100.0	104.4%

Loose Lift Thickness (in.): -

Fill Placement: ☐ Controlled ☑ Uncontrolled

Continued on following page . . .

CRAIG TESTING LABORATORIES, INC.
5439 Harding Highway • P.O. Box 427 • Mays Landing, NJ 08330-0427 • (609) 625-1700 • FAX (609) 625-1798

CLIENT: General Dynamics Information Technology

PROJECT NO.: 811092-3

PROJECT: Reflective Cracking Outdoor Phase I, Building 296 Outdoors, William J. Hughes Technical Center

REPORT NO.: FD-18

INSPECTED BY: Robert D. Barrett

DATE INSPECTED: July 17, 2018

GEOTECHNICAL REPORT BY: N/A

DATED: N/A

EARTHWORK FIELD INSPECTION REPORT

Item Inspected: ☐ Building Pad ☐ Slab ☐ Foundation ☐ Other:
☐ Utility Trench ☐ Sub-Grade ☑ Pavement Sub-Base

Compactor Model: Caterpillar PS-300C

	Location	Dry Density (pcf)	Percent Moisture	Proctor (pcf) ASTM D155	Optimum Moisture (%)	Compaction Required (%)	Percent Compaction
11	Station 136.0, Offset 0.00, 6" Depth	136.7	7.0	130.8	7.2	100.0	104.5%
12	Station 150.0, Offset 0.50, 6" Depth	133.9	7.1	130.8	7.2	100.0	102.4%
13	Station 10.0, Offset 3.00, 8" Depth	135.4	7.3	130.8	7.2	100.0	103.5%
14	Station 15.5, Offset 2.50, 8" Depth	131.2	7.8	130.8	7.2	100.0	100.3%
15	Station 28.5, Offset -1.00, 8" Depth	131.7	7.8	130.8	7.2	100.0	100.7%
16	Station 36.5, Offset 0.00, 8" Depth	133.0	8.3	130.8	7.2	100.0	101.7%
17	Station 47.5, Offset 2.00, 8" Depth	134.9	7.2	130.8	7.2	100.0	103.1%
18	Station 60.5, Offset -2.00, 8" Depth	134.3	6.7	130.8	7.2	100.0	102.7%
19	Station 69.5, Offset 1.00, 8" Depth	132.9	6.8	130.8	7.2	100.0	101.6%
20	Station 76.0, Offset 0.00, 8" Depth	135.5	6.7	130.8	7.2	100.0	103.6%

Gauge Serial No.: 33784

Gauge Standard Counts: MS: 734 DS: 1846

Fill Placement: ☐ Controlled ☑ Uncontrolled

Loose Lift Thickness (in.): -

Hours on Site: 8:00 AM - 3:15 PM

Inspection Findings

Report for Informational Purposes Only

Remarks:

Ran tests at 4", 6", & 8" depths at 6 previous spots that failed (18 total). Ran 9 additional tests at 8" depths on areas that passed. See separate report for additional test results.

Reported to:
Project Distribution

Reviewed By: Ed Freire

CRAIG TESTING LABORATORIES, INC.
5439 Harding Highway • P.O. Box 427 • Mays Landing, NJ 08330-0427 • (609) 625-1700 • FAX (609) 625-1798

CLIENT: General Dynamics Information Technology

PROJECT NO.: 811092-3

PROJECT: Reflective Cracking Outdoor Phase I, Building 296 Outdoors, William J. Hughes Technical Center

REPORT NO.: FD-19

INSPECTED BY: Robert D. Barrett

DATE INSPECTED: July 17, 2018

GEOTECHNICAL REPORT BY: N/A

DATED: N/A

EARTHWORK FIELD INSPECTION REPORT

Item Inspected: ☐ Building Pad ☐ Slab ☐ Foundation ☐ Other:
☐ Utility Trench ☐ Sub-Grade ☑ Pavement Sub-Base

Compactor Model: Caterpillar PS-300C

	Location	Dry Density (pcf)	Percent Moisture	Proctor (pcf) ASTM D1557	Optimum Moisture (%)	Compaction Required (%)	Percent Compaction
1	Station 89.0, Offset -2.00, 8" Depth	133.3	8.5	130.8	7.2	100.0	101.9%
2	Station 96.5, Offset -3.00, 8" Depth	135.0	7.1	130.8	7.2	100.0	103.2%
3	Station 107.5, Offset 3.00, 8" Depth	132.3	7.6	130.8	7.2	100.0	101.1%
4	Station 118.0, Offset 2.00, 8" Depth	134.2	7.5	130.8	7.2	100.0	102.6%
5	Station 127.5, Offset -1.00, 8" Depth	131.6	7.7	130.8	7.2	100.0	100.6%
6	Station 136.0, Offset 0.00, 8" Depth	133.3	7.2	130.8	7.2	100.0	101.9%
7	Station 150.0, Offset 0.50, 8" Depth	131.9	7.3	130.8	7.2	100.0	100.8%
8	Station 89.0, Offset -2.00, 8" Depth*New area	132.5	7.6	130.8	7.2	100.0	101.3%
9							
10							

Gauge Serial No.: 33789

Gauge Standard Counts: MS: 734 DS: 1846

Fill Placement: ☐ Controlled ☑ Uncontrolled

Loose Lift Thickness (in.): -

Hours on Site: 8:00 AM - 3:15 PM

Inspection Findings

Report for Informational Purposes Only

Remarks:

See separate report for additional test results. Ran 9 additional tests at 8" depths on areas that passed. A small 3'x5' area was ripped up & replaced with new material and a 28th test was run

Reported to:
Project Distribution

Reviewed By: Ed Freire

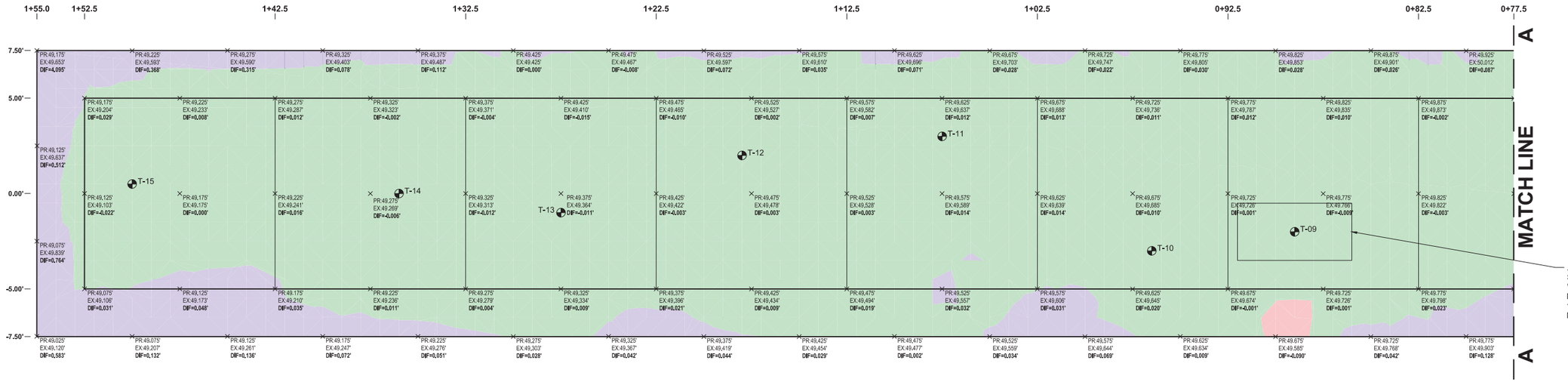

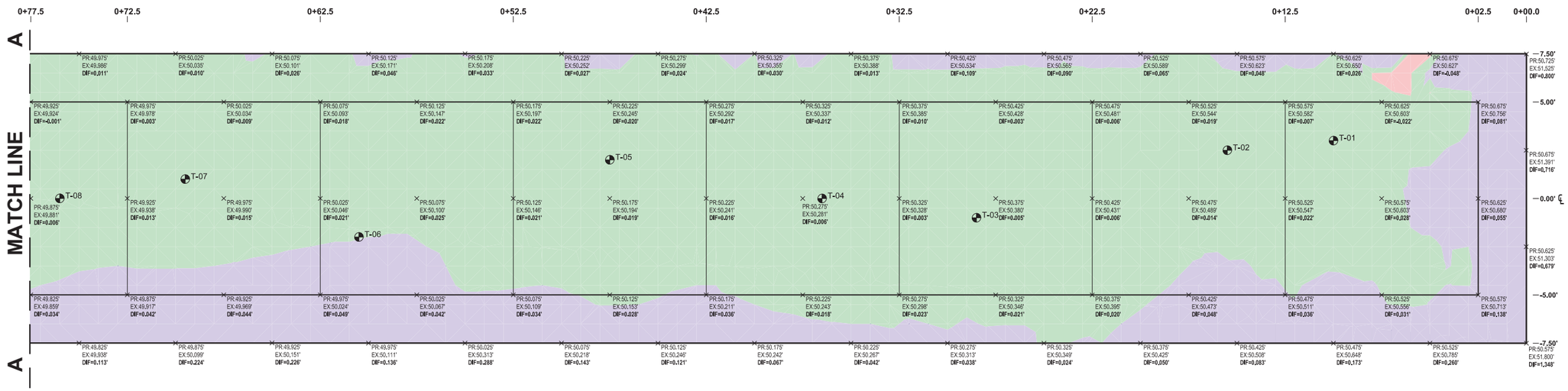

PLAN VIEW

SCALE: 1"=3'

TEST RESULTS					
ID	STA.	OFF.	DRY DENSITY	PERCENT COMPACTION	PERCENT MOISTURE
T-01	0+10.0	+3.0	135.4	103.5	7.3
T-02	0+15.5	+2.5	131.2	100.3	7.8
T-03	0+28.5	-1.0	131.7	100.7	7.8
T-04	0+36.5	0.0	133.0	101.7	8.3
T-05	0+47.5	+2.0	134.9	103.1	7.2
T-06	0+60.5	-2.0	134.3	102.7	6.7
T-07	0+69.5	+1.0	132.9	101.6	6.8
T-08	0+76.0	0.0	135.5	103.6	6.7
T-09	0+89.0	-2.0	133.3	101.9	8.5
T-10	0+96.5	-3.0	135.0	103.2	7.1
T-11	1+07.5	+3.0	132.3	101.1	7.6
T-12	1+18.0	+2.0	134.2	102.6	7.5
T-13	1+27.5	-1.0	131.6	100.6	7.7
T-14	1+36.0	0.0	133.3	101.9	7.2
T-15	1+50.0	+0.5	131.9	100.8	7.3

* TEST PERFORMED ON 7/17/2018
* PROCTOR VALUE OF 130.8 pcf AND 7.2% MOISTURE.

3' 2' 1' 0 3' 6' 9'

GRAPHIC SCALE

1" = 3'

CUT (+) AND FILL (-) SUMMARY TABLE				
ID	COLOR	MIN. [FT]	MAX. [FT]	AREA [SQ. FT]
1		-0.244	-0.031	8.00
2		-0.031	0.031	1879.11
3		0.031	1.495	437.86

LEGEND:

- TEST LOCATION
- x - SPOT ELEVATION
- PR - PROPOSED ELEVATION
- EX - EXISTING ELEVATION
- DIF - DIFFERENCE IN ELEVATION
- GRADE TOLERANCE: ± 0.031' (3/8")

- CONFORMING ELEVATION
- ELEVATION BELOW THE CONFORMANCE RANGE
- ELEVATION ABOVE THE CONFORMANCE RANGE

NO.	REVISIONS	DATE	BY	CHK	APR

RODRIGUEZ CONSULTING, LLC
1301 N 2ND STREET
PHILADELPHIA, PA 19122
PHONE: (215) 839-8087

GENERAL DYNAMICS
Information Technology
200 DECADON DRIVE
EGG HARBOR TOWNSHIP
NEW JERSEY 08234
PHONE: (609) 677-8543

FOR

NATIONAL AIRPORT PAVEMENT TEST FACILITY
ATLANTIC CITY AIRPORT
NEW JERSEY 08234

	NAME	DATE
DRAWN	M. MAZUREK	08/10/2018
CHECKED	H.Y. / J.G.	
FAA APPROVAL DATE:		

REFLECTIVE CRACKING OUTDOOR
PHASE I
P-154 ELEVATION MAP

PROJECT NO: | SIZE: ANSI D | SCALE: 1"=3' | SHEET 1 OF 1

CAD FILE: REFL-CRACK-OUT1-CONF.DWG

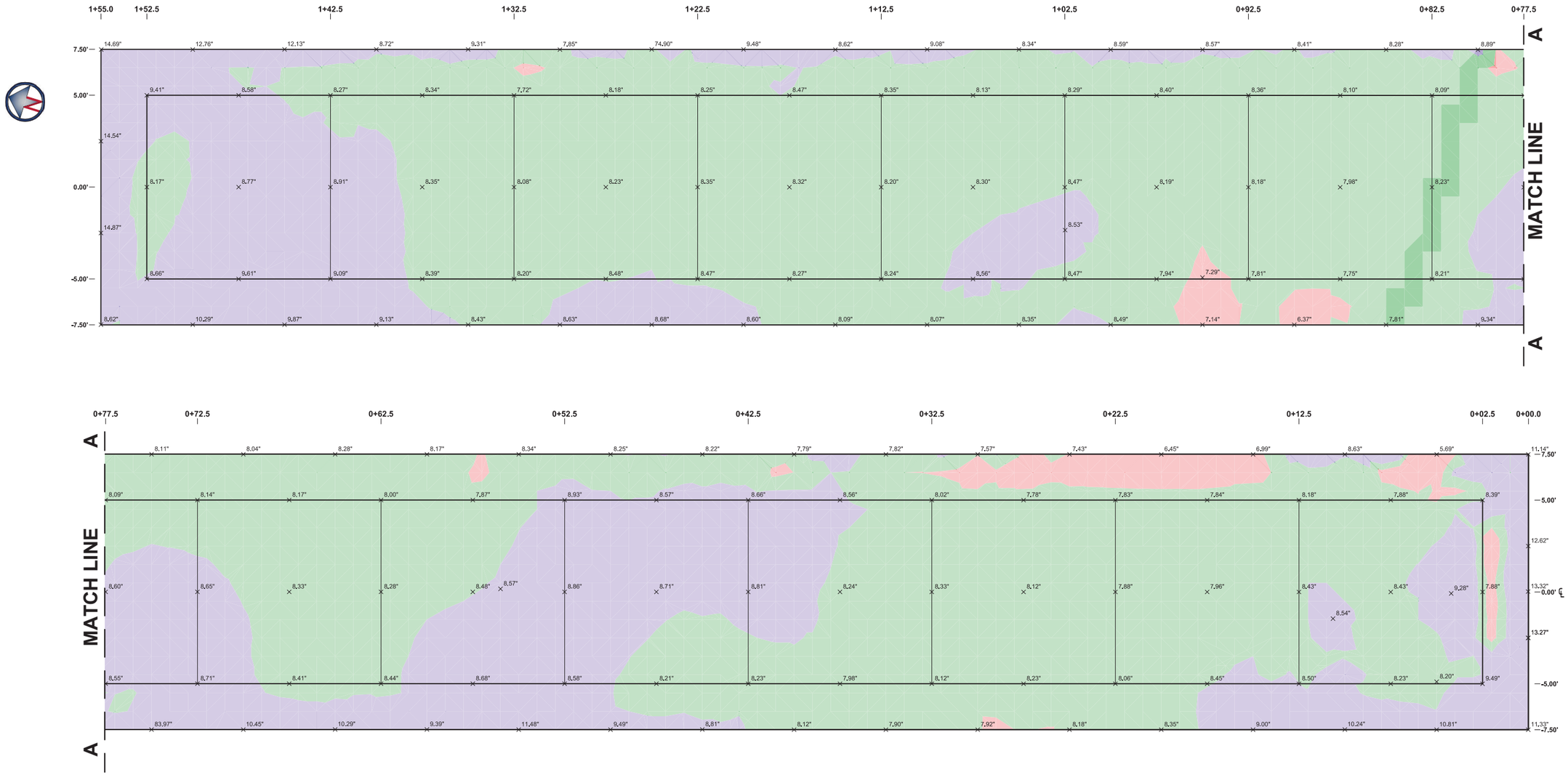

PLAN VIEW

SCALE: 1"=3'

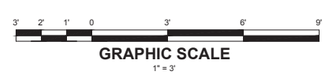

THICKNESS MAP LEGEND				
ID	MIN. THICKNESS [FT]	MAX. ELEVATION [FT]	AREA [SQ. FT]	COLOR
1	0.388'	0.625'	59.75	
2	0.625'	0.708'	1559.22	
3	0.708'	1.828'	705.97	

LEGEND:

x - THICKNESS LABEL

TARGET THICKNESS: 8"±½" (0.667±0.042')

THICKNESS TOLERANCE: ± 0.042' (½")

CONFORMING THICKNESS

THICKNESS BELOW THE CONFORMANCE RANGE

THICKNESS ABOVE THE CONFORMANCE RANGE

NO.	REVISIONS	DATE	BY	CHK	APR

RODRIGUEZ CONSULTING, LLC
1301 N 2ND STREET
PHILADELPHIA, PA 19122
PHONE: (215) 839-8087

GENERAL DYNAMICS
Information Technology
200 DECADON DRIVE
EGG HARBOR TOWNSHIP
NEW JERSEY 08234
PHONE: (609) 677-8543

FOR

NATIONAL AIRPORT PAVEMENT TEST FACILITY
ATLANTIC CITY AIRPORT
NEW JERSEY 08234

	NAME	DATE
DRAWN	M. MAZUREK	07/25/2018
CHECKED	H.Y. / J.G.	
FAA APPROVAL DATE:		

REFLECTIVE CRACKING OUTDOOR

PHASE I

P-154 THICKNESS MAP

PROJECT NO:	SIZE: ANSI D	SCALE: 1"=3'	SHEET 1 OF 1

CAD FILE: REFL-CRACK-OUT1-CONF.DWG

Smoothness/Straightedge Testing

Project: RCO P1
Date: 7/23/18
Inspector/Technician: SC, JK, MA

Material: P-154
Deviation Limit: Less than 3/8"
Specification for Approval: 100%

Test Results

Transverse Measurements - Pass? (Y/N)						Longitudinal Measurements - Pass? (Y/N)				
Station	Offset, ft					Station	Offset, ft			
	-6 to +6						0			
0+10	Y					0+16	Y			
0+30	Y					0+28	Y			
0+50	Y					0+40	Y			
0+70	Y					0+52	Y			
0+90	Y					0+64	Y			
1+10	Y					0+76	Y			
1+30	Y					0+88	Y			
1+50	N					1+00	Y			
						1+12	Y			
						1+24	Y			
						1+36	Y			
						1+48	N			
# Pass	7	0	0	0	0	**# Pass**	11	0	0	0
# Fail	1	0	0	0	0	**# Fail**	1	0	0	0
% Fail	12.50					**% Fail**	8.33			
Total Passing, %		**90.00**								

Additional Comments:

FIELD TEST RESULTS

D-Portable Seismic Pavement Analyzer (D-PSPA)

Project: RC Outdoor Phase I
Date: 07/26/2018
Technician: Jason Alcoba
Layer Material: P154MR
Lift Number: 1
Layer Density (pcf): 130.8
Poisson's Ratio: 0.35
Number of Receivers: 2

Source-near Receiver Spacing (in): 4
Near-far Receiver Spacing (in): 4
Ground Temperature (°F): 79-93
Ambient Temperature (°F): 74-90
Are wave-shapes reasonable? Yes
Are reduced (dispersion) curves close? Yes
Calibration performed according to SOP? Yes

Test Results			
Station	**Offset, ft**	**Average Temperature, F**	**Average Modulus, ksi**
0+07.5	0	81.0	69.7
0+17.5	0	82.0	74.3
0+27.5	0	84.0	63.3
0+37.5	0	84.0	62.2
0+47.5	0	83.6	57.4
0+57.5	0	84.0	54.0
0+97.5	0	86.0	72.0
1+07.5	0	87.4	50.8
1+17.5	0	86.5	54.5
1+27.5	0	86.7	59.7
1+37.5	0	88.6	56.3
1+47.5	0	90.4	41.1

Additional Comments: *Avg. Modulus: 59.6 ksi, P-154MR Properties from Nuclear Gage Testing (Test Date: 07/17/2018): Avg. Moisture Content: 7%, Avg. Density: 101.8%*
Average Moisture on Day of Testing D-PSPA: 6.9%

Reviewed By:

Date:

ASTM E2583 - Light Weight Deflectometer (LWD)

Project: RC Outdoor Phase I
Date: 07/24/2018
Technician: Jason Alcoba
Layer Material: P-154MR
Lift Number: 1
Layer Thickness (in): 8
Plate Diameter (in): 11.8
Number of Sensors: 1

Radial Offset of Sensor (in): 0
Height of Drops (in): 6, 12, 18, 24
Falling Weight (lbs): 33.07
Buffer Type: Hard
Ground Temperature (°F): 79-93
Ambient Temperature (°F): 74-90
Equipment Calibration Date: N/A

Preconditioning Drops						
Load 1, lbf	Load 2, lbf	Load 3, lbf	Load 4, lbf	Load 5, lbf	% Difference <3%?	
1776	1754	1776	1798	1754	Yes	
Test Results						
Location	Height, in	Load, lbf	Stress, psi	Deflection, mils	Stiffness, ksi	% Difference <3%?
0+07.5, 0	6	741.9	6.8	7.3	9.7	Yes
	12	1056.6	9.6	9.7	10.3	Yes
	18	1371.3	12.6	12.0	11.0	Yes
	24	1809.7	16.5	15.5	11.0	Yes
0+17.5, 0	6	741.9	6.8	2.9	24.2	Yes
	12	1067.8	9.8	4.4	23.0	Yes
	18	1393.8	12.8	6.0	22.0	Yes
	24	1742.3	15.9	7.1	23.3	Yes
0+27.5, 0	6	775.6	7.1	3.8	19.3	Yes
	12	1067.8	9.7	5.2	19.5	Yes
	18	1416.3	13.0	6.8	19.8	Yes
	24	1753.5	16.1	8.7	19.2	Yes
0+37.5, 0	6	786.8	7.1	2.3	31.8	Yes
	12	1090.3	9.9	3.3	30.8	Yes
	18	1438.8	13.1	4.4	30.7	Yes
	24	1753.5	16.0	5.8	28.5	Yes
0+47.5, 0	6	753.1	6.9	3.1	23.3	No
	12	1067.8	9.8	4.6	22.3	Yes
	18	1438.8	13.1	6.3	21.5	Yes
	24	1798.5	16.4	8.1	21.0	Yes
0+57.5, 0	6	764.4	7.0	2.5	28.7	Yes
	12	1056.6	9.7	3.7	27.4	Yes
	18	1427.5	13.0	5.1	26.6	Yes
	24	1787.2	16.3	6.6	25.6	Yes
0+97.5, 0	6	764.4	7.0	2.2	33.4	Yes
	12	1079.1	9.9	3.2	31.5	Yes
	18	1405.1	12.8	4.3	30.9	Yes
	24	1809.7	16.5	5.8	29.4	Yes
	6	730.6	6.7	2.6	26.5	Yes

Data Reviewed By:

Date:

ASTM E2583 - Light Weight Deflectometer (LWD)

Project: RC Outdoor Phase I
Date: 07/24/2018
Technician: Jason Alcoba
Layer Material: P-154MR
Lift Number: 1
Layer Thickness (in): 8
Plate Diameter (in): 11.8
Number of Sensors: 1

Radial Offset of Sensor (in): 0
Height of Drops (in): 6, 12, 18, 24
Falling Weight (lbs): 33.07
Buffer Type: Hard
Ground Temperature (°F): 79-93
Ambient Temperature (°F): 74-90
Equipment Calibration Date: N/A

Preconditioning Drops					
Load 1, lbf	Load 2, lbf	Load 3, lbf	Load 4, lbf	Load 5, lbf	% Difference <3%?
1776	1754	1776	1798	1754	Yes

Test Results						
Location	Height, in	Load, lbf	Stress, psi	Deflection, mils	Stiffness, ksi	% Difference <3%?
1+07.5, 0	12	1056.6	9.7	3.8	26.8	Yes
	18	1427.5	13.1	5.2	26.1	Yes
	24	1776.0	16.2	6.7	24.9	Yes
1+17.5, 0	6	798.1	7.3	2.1	35.0	Yes
	12	1090.3	9.9	3.0	34.4	Yes
	18	1450.0	13.2	4.1	33.1	Yes
	24	1798.5	16.5	5.4	31.8	Yes
1+27.5, 0	6	764.4	7.0	2.6	28.2	Yes
	12	1112.8	10.1	3.9	27.0	Yes
	18	1382.6	12.6	4.8	27.3	Yes
	24	1776.0	16.2	6.5	25.9	Yes
1+37.5, 0	6	764.4	7.0	2.5	29.7	Yes
	12	1079.1	9.8	3.4	29.7	Yes
	18	1438.8	13.1	4.6	29.2	Yes
	24	1798.5	16.4	5.9	28.9	Yes
1+47.5, 0	6	719.4	6.6	4.6	14.7	Yes
	12	1101.6	10.0	7.1	14.6	Yes
	18	1416.3	12.9	9.0	14.9	Yes
	24	1776.0	16.2	11.6	14.5	Yes

Additional Comments: *The modulus reported here is the combined modulus of P-152MR and P-154MR Average Modulus at 24-in. drop height: 23.7 ksi. P-154MR Properties from Nuclear Gage (Test Date: 07/17/2018): Avg. Moisture Content: 7%, Avg. Density: 101.8% Average Moisture on Day of Testing LWD: 5.0%*

Data Reviewed By: Date:

Field Testing on P-154MR Layer (Verification) – Conducted on November 14, 2018

D-Portable Seismic Pavement Analyzer (D-PSPA)

Project: RC Outdoor Phase I
Date: 11/14/2018
Technician: Jason Alcoba
Layer Material: P154MR
Lift Number: 1
Layer Density (pcf): 130.8
Poisson's Ratio: 0.35
Number of Receivers: 2

Source-near Receiver Spacing (in): 4
Near-far Receiver Spacing (in): 4
Ground Temperature (°F): 37-46
Ambient Temperature (°F): 34-36
Are wave-shapes reasonable? Yes
Are reduced (dispersion) curves close? Yes
Calibration performed according to SOP? Yes

Test Results			
Station	**Offset, ft**	**Average Temperature, F**	**Average Modulus, ksi**
0+07.5	0	38.1	51.3
0+17.5	0	39.0	63.0
0+27.5	0	39.6	27.7
0+37.5	0	41.0	44.1
0+47.5	0	40.3	43.3
0+57.5	0	42.5	N/A*
0+97.5	0	44.5	60.2
1+07.5	0	42.7	64.3
1+17.5	0	42.7	30.3
1+27.5	0	43.0	56.3
1+37.5	0	41.0	29.6
1+47.5	0	41.0	39.0

Additional Comments: *Avg. Modulus: 46.3 ksi, P-154MR Properties from Nuclear Gage Testing (Test Date: 11/14/2018): Avg. Moisture Content: 7.1%, Avg. Dry Density: 134.9 pcf*

**No good readings after several testing*

ASTM E2583 - Light Weight Deflectometer (LWD)

Project: RC Outdoor Phase I
Date: 11/14/2018
Technician: Carlos Rosado
Layer Material: P-154MR
Lift Number: 1
Layer Thickness (in): 9
Plate Diameter (in): 11.8
Number of Sensors: 1

Radial Offset of Sensor (in): 0
Height of Drops (in): 6, 12, 18, 24
Falling Weight (lbs):
Buffer Type: Hard
Ground Temperature (°F): 37-46
Ambient Temperature (°F): 34-36
Equipment Calibration Date: N/A

Preconditioning Drops					
Load 1, lbf	Load 2, lbf	Load 3, lbf	Load 4, lbf	Load 5, lbf	% Difference <3%?
1765	1778	1761	1746	1777	Yes

Test Results						
Location	Height, in	Load, lbf	Stress, psi	Deflection, mils	Stiffness, ksi	% Difference <3%?
0+07.5, 0	6	804.1	7.3	6.4	12.0	Yes
	12	1108.2	10.1	9.4	11.2	Yes
	18	1423.5	13.0	12.1	11.1	Yes
	24	1770.9	16.2	16.0	10.5	Yes
0+17.5, 0	6	793.2	7.3	8.4	9.0	Yes
	12	1115.5	10.2	10.7	9.9	Yes
	18	1446.1	13.2	13.0	10.6	Yes
	24	1778.3	16.2	15.1	11.2	Yes
0+27.5, 0	6	801.9	7.3	7.2	10.5	Yes
	12	1115.0	10.2	9.8	10.9	Yes
	18	1445.5	13.2	12.2	11.4	Yes
	24	1786.4	16.3	13.6	12.4	Yes
0+37.5, 0	6	791.5	7.2	4.9	15.4	Yes
	12	1104.9	10.1	6.4	16.5	Yes
	18	1454.4	13.3	8.3	16.8	Yes
	24	1809.8	16.6	10.7	16.0	Yes
0+47.5, 0	6	805.7	7.4	6.9	11.1	No
	12	1113.4	10.2	8.5	12.3	Yes
	18	1465.0	13.4	10.2	13.7	Yes
	24	1820.8	16.6	13.4	12.9	Yes
0+57.5, 0	6	795.6	7.3	6.8	11.1	Yes
	12	1121.1	10.3	8.7	12.3	Yes
	18	1464.5	13.4	10.9	12.8	Yes
	24	1795.8	16.4	13.4	12.7	Yes
0+97.5, 0	6	809.8	7.4	5.3	14.6	Yes
	12	1126.1	10.3	7.2	14.9	Yes
	18	1445.1	13.2	9.5	14.4	Yes
	24	1802.8	16.5	11.5	14.9	Yes

Data Reviewed By:

Date:

ASTM E2583 - Light Weight Deflectometer (LWD)

Project: RC Outdoor Phase I
Date: 11/14/2018
Technician: Carlos Rosado
Layer Material: P-154MR
Lift Number: 1
Layer Thickness (in): 9
Plate Diameter (in): 11.8
Number of Sensors: 1

Radial Offset of Sensor (in): 0
Height of Drops (in): 6, 12, 18, 24
Falling Weight (lbs):
Buffer Type: Hard
Ground Temperature (°F): 37-46
Ambient Temperature (°F): 34-36
Equipment Calibration Date: N/A

Preconditioning Drops					
Load 1, lbf	Load 2, lbf	Load 3, lbf	Load 4, lbf	Load 5, lbf	% Difference <3%?
1765	1778	1761	1746	1777	Yes

Test Results						
Location	Height, in	Load, lbf	Stress, psi	Deflection, mils	Stiffness, ksi	% Difference <3%?
1+07.5, 0	6	806.9	7.4	5.9	12.9	Yes
	12	1109.4	10.1	8.6	12.2	Yes
	18	1442.6	13.2	10.0	13.7	Yes
	24	1798.2	16.4	11.4	15.0	Yes
1+17.5, 0	6	800.5	7.3	6.2	12.3	Yes
	12	1105.4	10.1	8.1	12.7	Yes
	18	1441.5	13.2	10.9	12.6	Yes
	24	1808.0	16.5	11.2	15.3	Yes
1+27.5, 0	6	816.3	7.5	7.2	10.9	Yes
	12	1110.4	10.2	9.3	11.3	Yes
	18	1444.1	13.2	11.5	11.9	Yes
	24	1805.9	16.5	13.2	13.0	Yes
1+37.5, 0	6	797.7	7.3	5.4	14.0	Yes
	12	1115.6	10.2	7.3	14.5	Yes
	18	1453.0	13.3	10.1	13.7	Yes
	24	1804.6	16.5	8.3	20.6	Yes
1+47.5, 0	6	783.9	7.2	6.9	10.8	Yes
	12	1109.2	10.2	9.6	11.0	Yes
	18	1436.8	13.1	11.5	11.9	Yes
	24	1794.4	16.4	13.1	13.0	Yes

Additional Comments: *The modulus reported here is the combined modulus of P-152MR and P-154MR Average Modulus at 24-in. drop height: 13.9 ksi. P-154MR Properties from Nuclear Gage (Test Date: 11/14/2018): Avg. Moisture Content: 7.1%, Avg. Dry Density: 134.9 pcf*

Data Reviewed By: Date:

LABORATORY TEST RESULTS

COMPACTION TEST REPORT

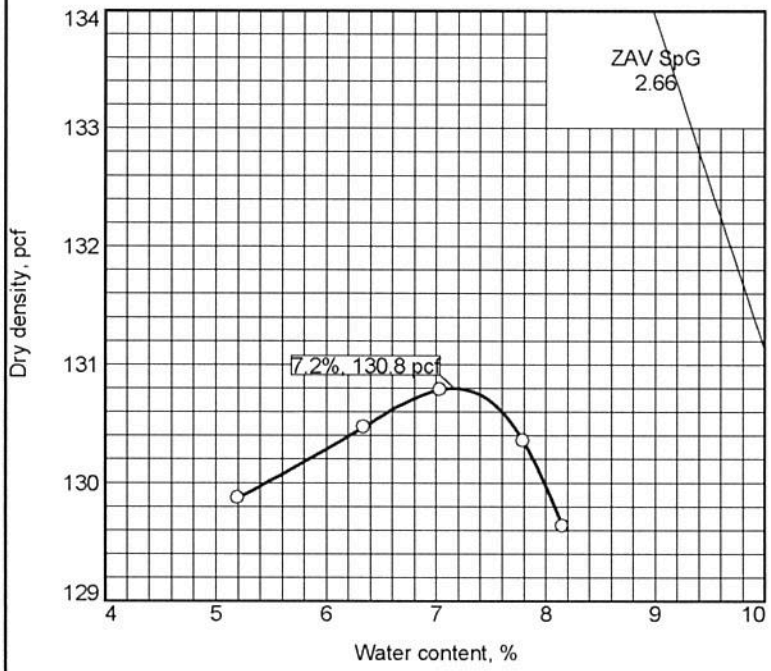

Curve No.

Test Specification:
ASTM D 1557-07 Method A Modified

Preparation Method Dry
Hammer Wt. 10 lb.
Hammer Drop 18 in.
Number of Layers five
Blows per Layer 25
Mold Size 0.03333 cu. ft.

Test Performed on Material
Passing #4 **Sieve**

NM **LL** NV **PI** NP
Sp.G. (ASTM D 854) 2.659
%>#4 0.3 **%<No.200** 12.4
USCS SM **AASHTO** A-1-b
Date Sampled 7/2/18
Date Tested 7/3/18
Tested By Renee' Norcross

TESTING DATA

	1	2	3	4	5	6
WM + WS	6500.9	6450.0	6508.9	6482.1	6504.3	
WM	4384.6	4384.6	4384.6	4384.6	4384.6	
WW + T #1	884.8	440.5	590.7	594.9	612.6	
WD + T #1	839.2	427.5	562.2	569.0	578.5	
TARE #1	190.8	177.3	196.5	160.4	160.3	
WW + T #2						
WD + T #2						
TARE #2						
MOISTURE	7.0	5.2	7.8	6.3	8.2	
DRY DENSITY	130.8	129.9	130.4	130.5	129.6	

TEST RESULTS

Maximum dry density = 130.8 pcf

Optimum moisture = 7.2 %

Material Description

Dark gray and red silty sand

Remarks:

Project No. **Client:**
Project: Outdoor Reflective Cracking Phase 1
TO #15
○ **Source:** As Delivered P-154MR(3) - 07/02/2018 **Sample No.:** P-154MR(3)

Federal Aviation Administration

Atlantic City, New Jersey

Checked by: Matthew Brynick
Title: Laboratory Manager

LICENSED PROFESSIONAL ENGINEER
MATTHEW T BRYNICK
062.065880

Figure

Sieve Analysis of Aggregates and Soils
ASTM C117 & C136

National Airport Pavement Test Facility
William J. Hughes Technical Center
Atlantic City International Airport
New Jersey 08405

Project: RCO P1 - TO #15 **Date:** 7/3/2018
Section: As Delivered - 7/2/2018
Description: Dark gray and red silty sand
P-154MR (3)
Sample No: 1 **Procedure:** A - Washing with Plain Water
Technician: RHN **Prof. Engineer:** MTB

Pan No:	LB	**Pan Mass (g):**	1316.4
Oven Dry + Pan Mass (g):	2444.0	**Washed + Pan Mass (g):**	2320.2
Original Sample Oven Dry Mass (g):	1127.6	**Washed Mass (g):**	1003.8

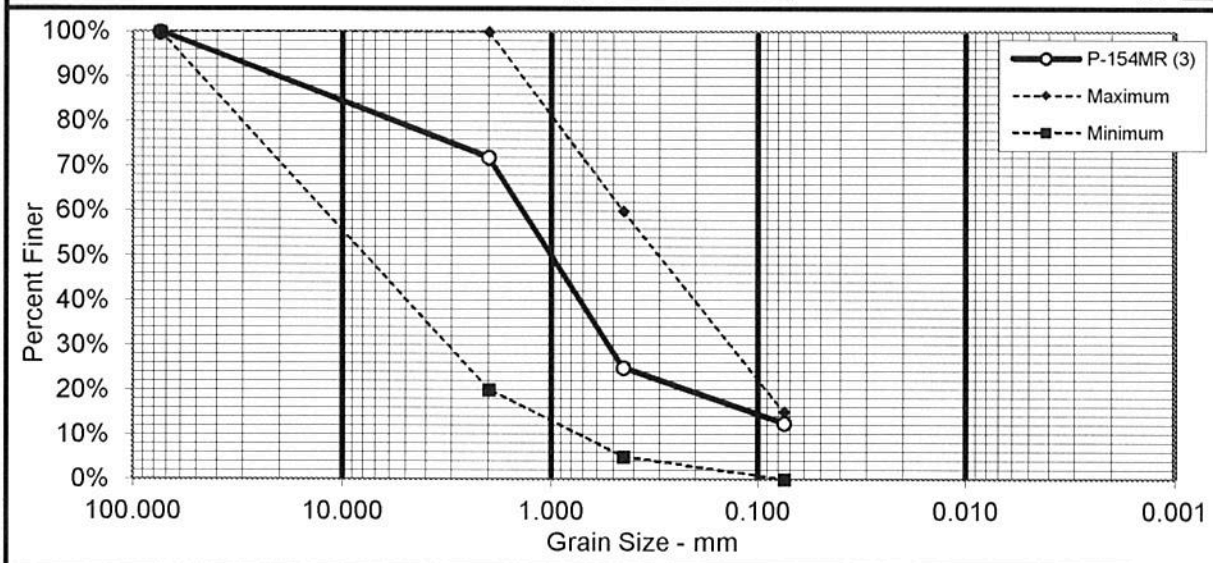

Sieve Size (US inches)	Opening Size (mm)	Retained Mass (g)	Cumulative Mass (g)	Individual Percent Retained	Cumulative Percent Retained	Percent Passing	P-154MR Spec. Percent	
							Max.	Min.
3	75	0	0.0	0.0%	0.0%	100.0%	100%	100%
No. 10	2.0	316.5	316.5	32%	28%	72%	100%	20%
No. 40	0.450	530.1	846.6	53%	75%	25%	60%	5%
No. 200	0.075	141	987.6	14%	88%	12%	15%	0%
PAN		13.9	1001.5	1.4%	89%	0.0%	0.0%	0.0%

Percent Loss by Washing: 11%
Percent Loss of Sieved Material: 0.2%

Atterberg Limits
PL: NP
LL: NV
PI: NP

Coefficients
D_{90}: 3.5089 D_{85}: 3.0034 D_{60}: 1.3499
D_{50}: 0.9710 D_{30}: 0.5024 D_{15}: 0.1073
D_{10}: C_U: C_C:

Classification
USCS: SM **AASHTO:** A-1-b

Remarks: NP = Non-Plastic, NV = No Value
P154MR (3) meets P-154MR specification per TO #15 Outdoor Reflective Cracking Phase I

Revised: 5/30/2018

SUMMARY OF RESILIENT MODULUS AND QUICK SHEAR TESTS

Table G1. Resilient Modulus Test Results on P-154MR Material

ID	ρ_{dry} (pcf)	w (%)	$M_{R\text{-}min}$ (psi)	$M_{R\text{-}max}$ (psi)	k_1	k_2	k_3	S_e/S_y	R^2_{Adj}
5C	133.6	8.3	13,082	48,327	944	0.683	-0.115	0.085	0.99
5D	133.5	8.0	16,563	52,011	1,101	0.611	-0.091	0.162	0.97
5E	133.2	8.5	14,968	52,576	1,024	0.635	-0.010	0.157	0.97
10A	131.0	8.2	13,300	48,385	921	0.631	-0.010	0.143	0.98
10C	133.5	8.3	15,258	52,692	1,147	0.667	-0.221	0.075	0.99
10D	133.7	8.2	16,984	52,736	1,132	0.679	-0.252	0.159	0.97
15A	133.3	8.2	11,531	46,557	878	0.696	-0.081	0.048	1.00
15B	133.3	8.6	13,184	55,288	922	0.705	-0.040	0.111	0.99
15C	133.3	8.3	14,431	56,246	977	0.688	-0.010	0.145	0.98
Avg.	**133.2**	**8.3**	**14,367**	**51,646**	**1,005**	**0.666**	**-0.092**	**0.121**	**0.98**

ρ_{dry} = dry density of the specimen;
w = moisture content at the end of test;
$M_{R\text{-}min}$ = minimum measured modulus;
$M_{R\text{-}max}$ = maximum measured modulus;
k_1, k_2, k_3 = regression constants;
S_e/S_y = standard error ratio; and
R^2_{Adj} = adjusted coefficient of determination;

Table G2. Quick Shear Test Results on P-154MR Material

Specimen	Compaction Condition		Quick Shear		
ID	ρ_{dry} (pcf)	w (%)	σ_3 (psi)	$\varepsilon_{v\text{-}max}$ (%)	$\sigma_{d\text{-}max}$ (psi)
5C	133.6	8.3	5	2.86	144
5D	133.5	8.0		2.86	133
5E	133.2	8.5		1.82	117
Average				2.51	131
10C	133.5	8.3	10	2.25	162
10D	133.7	8.2		2.98	163
Average				2.61	162
15A	133.3	8.2	15	4.55	230
15B	133.3	8.6		4.44	214
15C	133.3	8.3		3.60	189
Average				4.20	211

σ_3 = *confining pressure for quick shear test;*
$\sigma_{d\text{-}max}$ = *maximum deviator stress from quick shear test; and*
$\varepsilon_{v\text{-}max}$ = *vertical strain at maximum deviator strain.*

Sample No.	1	2	3
Max. Total Vertical Stress (psi)	136.4	172.2	226.3
Total Confining Stress (psi)	5.0	10.0	15.0

Strength Parameters	
Cohesion (psi)	15.0
Friction Angle (°)	52.9

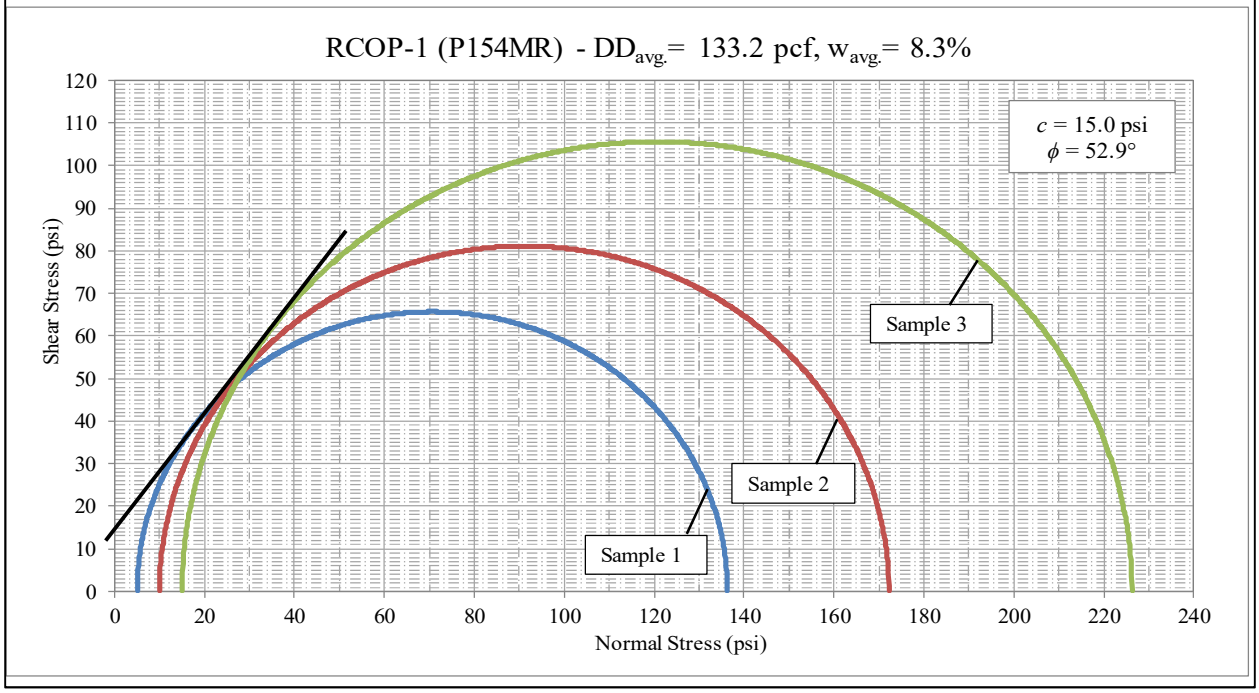

Figure F1. Mohr-Coulomb Failure Envelopes for the P-154MR Material

APPENDIX H

P-501MR Mix Design

	NATIONAL AIRPORT PAVEMENT TEST FACILITY TRANSMITTAL OF SHOP DRAWINGS, EQUIPMENT DATA, MATERIAL SAMPLES, OR MANUFACTURER'S CERTIFICATES OF COMPLIANCE	**National Airport Pavement Test Facility** **William J. Hughes Technical Center** **Atlantic City International Airport** **New Jersey 08405**

Task Order:	Task Order 015		**Date Submitted:**	11/01/2018
Project Name:	Reflective Cracking (Outdoor Phase I)		**Specification No.:**	501MR
Transmittal Description:	P-501MR Mix Design Submittal		**Source:**	Penn Jersey
Transmittal Purpose:	FAA Approval		**Transmittal Type:**	Initial Submittal

Item No.:	Description:	Variation:	Contractor Recommendation:
501 MR-02	Aggregate/Gradation		A
501 MR-03	Cement		A
501 MR-04	Cementitious Material		A
501 MR-10	Admixtures		A
501 MR-15	Mix Design		A

Contractor Remarks:

1	GDIT is requesting to use the 900 Flex Mix Design used in Construction Cycle 8.
2	Alkali-Silica Reactivity exceeds the specifications. Concrete Sand = .17%, Stone = .13%. GDIT does not believe this to be an issue for the Reflective Cracking (Outdoor) Experiment
3	
4	
5	
6	
7	
8	
9	
10	

Contractor Approval Actions:

Janine Abyad	11/01/2018
Contractor Name & Signature	***Date***

FAA Review Action Codes:

	X	"A" - Approved as Submitted; Completed
		"B" - Approved, except as noted on drawings; Completed
		"C" - Approved, resubmission required
		"D" - Returned by Correspondence; Completed
		"E" - Disapproved (see attached); Resubmit
		"F" - Receipt Acknowledged; Completed
		"G" - Other (Specify); Resubmit
		"X" - Receipt Acknowledged, does not comply; Resubmit

FAA Approval Actions:

Richard G Ji	11/13/2018
FAA Name & Signature	***Date***

Additional FAA Comments:

1	
2	
3	
4	
5	

SUBMITTAL COVER

A.E. STONE, INC.
1435 Doughty Road
Egg Harbor Township, NJ 08234
Work Order N0. 1815

Tel: 609-641-2781
Fax: 609-641-0374

DATE: 11/1/2018

SUBMITTAL #: 003 Revised

PROJECT: Outdoor / Indoor Reflective Cracking Phase I Construction
William J. Hughes Technical Center, National Airport Pavement Research Center
Atlantic City International Airport, New Jersey

OWNER: FAA
William J. Hughes Technical Center
Atlantic City Airport, New Jersey
Northfield, NJ

Attn: Benjamin Mahaffay
Tel: 602-550-5275
Fax:
E-mail: benjamin.mahaffay@faa.gov

ENGINEER: SRA International Inc.
Egg Harbor Township, NJ 08234

Attn: Janine Abyad
Tel: 973-356-5030
Fax:
E-mail: Abyad, Janine [janine.abyad@gdit.com]

CONTRACTOR: A.E. Stone, Inc.

SUBCONTRACTOR: **L. Feriozzi Concrete Company**

SUBMITTAL PAGES: 1

ITEM NO.: **N/A**

UNIT CODE NO.:

ITEM DESCRIPTION: **Concrete Mix Design**

SPECIFICATION: **P501 - Mix Design**

PRIORITY:

MANUFACTURER or SUPPLIER **Penn Jersey Building Materials Inc.**

NOTES:

FOR ENGINEER USE ONLY

This is to certify that the above is submitted in accordance with the applicable plans and specifications for this project.

A.E. STONE, INC.

Christopher Brower

SUBMITTAL COVER SHEET

L.FERIOZZI
CONCRETE COMPANY

3010 Sunset Avenue
Atlantic City, New Jersey 08401
Phone (609) 823-2563
Fax (609) 344-3719

DATE: 9/26/18	**LFCC JOB #**
PROJECT: **Outdoor Reflective Cracking at FAA**	
TO: **AE Stone** **Attn: Christopher Brower**	SUBCONTRACTOR:

DATE	NO.	COPIES	DESCRIPTION
9/26/18	003	1	Mix Design

CONTRACTOR REVIEW	ARCHITECT / DESIGNER APPROVAL
We hereby state that we have reviewed, inspected and checked the information herewith submitted and vouch for its accuracy and compliance with the Contract Documents.	
DATE: **9/26/18**	
SIGNED: **Martin J. Gorka**	

PENN JERSEY BUILDING MATERIALS INC.

READY MIX CONCRETE
PROCESSED SAND & GRAVEL
BLOCK - MASONRY - BUILDING PRODUCTS

Contractor : Feriozzi Concrete Company
Project : FAA
Location : Pomona, NJ
Use : Test Strip

Mix ID number :	900FLEX	**Design Date :**	9/24/2018
Compressive Strength :	900 Flex	**Concrete Source :**	EHT, NJ
Aggregate size :	#8 & #57 Blend	**Unit Weight :**	138.1
Air content :	6%	**Slump Range :**	4"
Action Limit :	4.8% - 7.2%	**Action Limit :**	3" - 4.5"
Suspension Limit :	4.2% - 7.8%	**Suspension Limit :**	2.5" - 5"
Water / Cement ratio :	0.45		

Constituents :

Total Cementitious :	705				
Percentage Pozzolan Replacement :	25%				
		ASTM	**Quantity**	**Density**	**Volume**
Cement :	Lafarge Type I	*C-150*	529	3.150	2.69
Pozzolan :	STI ProAsh Type F	*C-618*	176	2.140	1.32
Fine Aggregate :	Tuckahoe Sand & Gravel Inc.	*C-33*	910	2.630	5.52
Course Aggregate :	New Enterprise Stone & Lime #57	*C-33*	1550	2.67	9.30
Course Aggregate :	New Enterprise Stone & Lime #8	*C-33*	250	2.67	1.50
Water :	Potable		315	1.000	5.05
Air :			6%		1.62
Total :			3730		27

Admixtures :

		ASTM	**floz-cwt**	**floz/yd**	
High range water reducer:	BASF MasterGlenium 7500	*C-494*	4	28.2	
Accelerator (Non-Chloride) :	BASF MasterSet AC 534	*C-494*	12 - 32		requested by contractor
Retarder :	BASF MasterSet R 100	*C-494*	1 - 3		requested by contractor
Air-Entrainment :	BASF MasterAir AE 90	*C-260*	1.5	10.6	* or as required

Submitted By :
James Laus

The following admixtures , conforming to the project specifications may be added at the contractor's request.
Admixture dosage ratesare subject to change due to weather and jobsite conditions as permitted by ACI 211.1 on proportioning.
Penn-Jersey Building Materials will deliver the concrete in accordance to ASTM C-94
This mix design has been designed in accordance with ACI 318 and 301.

MAILING ADDRESS
P.O. Box 991
Pleasantville NJ 08232

MAIN OFFICE
2819 Fire Road
EHT, NJ 08234
Telephone (609) 645-8135

PLANT LOCATION
2817 Fire Road
Egg Harbor Township NJ 08234
Telephone (609) 641-6994

ID #: 900FLEX

11:00AM

Wed

3yds

Phase II 900psi (PENN JERSEY)			
Material	Proportions	Bulk	Yield, Cu Ft
Berks #57	1550	2.670	9.30
Berks #8	250	2.670	1.50
Tuckahoe Sand	910	2.630	5.54
Water	315	1.000	5.05
Type 1 Portland Cement	529	3.150	2.69
Flyash Type F (30%)	176	2.140	1.32
Air %	6		1.62
W/C Ratio	0.45		
Total			27.0

Sample No.	Date of Pour	Date Tested	Age	Sta.	Transverse Location	Depth 1 (inches)	Depth 2 (Middle)	Depth 3 (inches)	Width 1 (inches)	Width 2 (Middle)	Width 3 (inches)	Span Length (inches)	Load (lbs)	Modulus of Rupture (psi)
Flex900	1/29/2015	2/5/2015	7			6.00	6.00	5.95	6.00	6.00	6.00	18	9564	801
Flex900	1/29/2015	2/5/2015	7			5.95	6.00	6.00	6.00	6.00	6.00	18	8657	725
Flex900	1/29/2015	2/5/2015	7			6.00	6.00	5.95	6.05	6.05	6.00	18	8873	739
													Average	755
Flex900	1/29/2015	2/12/2015	14			5.95	6.00	6.00	6.00	6.00	6.00	18	10676	895
Flex900	1/29/2015	2/12/2015	14			5.95	5.95	6.00	6.05	6.05	6.05	18	11360	949
Flex900	1/29/2015	2/12/2015	14			6.00	6.00	5.95	6.05	6.05	6.05	18	11250	935
													Average	925
Flex900	1/29/2015	2/26/2015	28			6.00	6.00	6.00	6.05	6.05	6.05	18	11961	989
Flex900	1/29/2015	2/26/2015	28			5.95	5.95	6.00	6.00	6.00	6.00	18	11449	965
Flex900	1/29/2015	2/26/2015	28			6.05	6.00	5.95	6.05	6.05	6.05	18	11073	915
													Average	955
Flex900	1/29/2015	4/29/2015	90			6.00	6.00	6.00	6.00	6.00	6.05	18	11652	968
Flex900	1/29/2015	4/29/2015	90			6.05	6.00	5.95	6.00	6.00	6.05	18	12016	999
Flex900	1/29/2015	4/29/2015	90			5.95	6.00	6.05	6.05	6.05	6.05	18	12088	999
													Average	990

LAFARGE CEMENT

NSF Certified to NSF/ANSI 61

Cement Mill Test Report

Month of Issue: September 2018

Plant:	Whitehall, PA
Product:	Portland Cement Type I
Silo:	B-2
Manufactured:	August 2018

ASTM C-150 and AASHTO M-85 Standard Requirements

CHEMICAL ANALYSIS

Item	Spec limit	Test Result
Rapid Method, X-Ray *(C 114)*		
SiO2 (%)	---	18.4
Al2O3 (%)		5.8
Fe2O3 (%)	6.0 max	2.6
CaO (%)	---	60.7
MgO (%)	6.0 max	2.8
SO3 (%)	3.0 max *	4.2
Loss on ignition (%)	3.5 max	2.8
Insoluble residue (%)	1.5 max	0.67
CO2 (%)	---	1.4
Limestone (%)	5.0 max	3.6
CaCO3 in Limestone (%)	70 min	89.8
Adjusted Potential Phase Composition *(C 150)*		
C3S (%)	---	49
C2S (%)	---	15
C3A (%)	---	11
C4AF (%)	---	8
C3S+4.75*C3A (%)	---	101
ASTM C 150-11 and AASHTO M 85-09 Optional Chemical Requirements:		
NaEq (%)	---	1.05

PHYSICAL ANALYSIS

Item	Spec limit	Test Result	
Air content of mortar (%) *(C 185)*	12 max	10	
Blaine Fineness (m2/kg) *(C 204)*	260 min	364	
-325 (%) *(C 430)*	---	96.1	
Autoclave expansion (%) *(C 151)*	0.80 max	0.04	
Compressive strength (MPa, [PSI]) *(C 109)*			
1 day	---	18.0	2610
3 days	12.0 [1740] min	25.5	3698
7 days	19.0 [2760] min	31.3	4539
28 days (Reflects previous month's data)	---	38.1	5525
Time of setting (minutes)			
Vicat Initial *(C 191)*	45 - 375	130	
Mortar Bar Expansion (%) *(C 1038)* **	0.02 max	0.006	

* May exceed 3.0% SO3 maximum based on our C1038 results of <0.02% expansion at 14 days. Data available upon request.

** Current Production run not available - most recent provided

We certify that the above described cement, at the time of shipment, meets the chemical and physical requirements of applicable PADOT, NYSDOT and NJDOT Specifications for Type I;
ASTM C-150 & AASHTO M-85 STANDARD SPECIFICATIONS FOR TYPE I CEMENT.

Certified By:

James Hosa

US East BU - Whitehall Plant
5160 Main St., Whitehall, PA 18052
Phone: (610) 261-3447

9/7/2018

TEC Services
Testing • Engineering • Consulting

Client: Mr. Doug Widener
Separation Technologies, LLC
2010 Brandon Shores Road
Baltimore, MD 21226

Date: July 26, 2018
TEC Services Project No: TEC 12-0988
TEC Laboratory No: 18-624

REPORT OF FLY ASH TESTS

Silo No: Silo #3
Manufacturer: Baltimore Brandon Shores Plant

Start Date: June 6, 2018
End Date: June 14, 2018
Date Received: June 19, 2018

Chemical Analysis	Results (wt%)	Specification (Class F) ASTM C618-17a	Specification (Class F) AASHTO M295-11
Silicon Dioxide (SiO_2)	45.1	----	----
Aluminum Oxide (Al_2O_3)	22.7	----	----
Iron Oxide (Fe_2O_3)	21.04	----	----
Sum of Silicon Dioxide, Iron Oxide & Aluminum Oxide (SiO_2+Al_2O_3+Fe_2O_3)	88.8	70 % min.	70 % min.
Calcium Oxide (CaO)	3.9	----	----
Magnesium Oxide (MgO)	0.8	----	----
Sodium Oxide (Na_2O)	0.46	----	----
Potassium Oxide (K_2O)	1.71	----	----
"Sodium Oxide Equivalent (Na_2O+0.658K_2O)"	1.59	----	----
Sulfur Trioxide (SO_3)	0.60	5 % max.	5 % max.
Loss on Ignition	1.9	6 % max.	5 % max.
Moisture Content	0.11	3 % max.	3 % max.
Available Alkalies			
Sodium Oxide (Na_2O) as Available Alkalies	0.17	----	----
Potassium Oxide (K_2O) as Available Alkalies	0.71	----	----
Available Alkalies as "Sodium Oxide Equivalent (Na_2O+0.658K_2O)"	0.64	----	1.5 % max.
Physical Analysis			
Fineness (Amount Retained on #325 Sieve)	11.7%	34 % max.	34 % max.
Strength Activity Index (Lehigh Leeds Alabama Portland Cement)			
At 7 Days: Control Average, psi: 5210; Test Average, psi: 4670	90%	75 % min.† (of control)	75 % min.† (of control)
At 28 Days: Control Average, psi: 5780; Test Average, psi: 5610	97%	75 % min.† (of control)	75 % min.† (of control)
Water Requirements (Test H_2O/Control H_2O) Control, mls: 242; Test, mls: 238	98%	105% max. (of control)	105% max. (of control)
Autoclave Expansion	-0.02%	± 0.8 % max.	± 0.8 % max.
Specific Gravity:	2.57	----	----

† Meeting the 7 day or 28 day strength activity index will indicate specification compliance

* Optional

The results of our testing indicate that this sample complies with ASTM C618-17a and AASHTO M295-11 specifications for Class F pozzolans.

Respectfully Submitted,
Testing, Engineering & Consulting Services, Inc.

Dean Roosa
Project Manager

BRIAN J. WOLFE
LICENSE
No 75795
STATE OF FLORIDA
PROFESSIONAL ENGINEER
7/26/18

Shawn P. McCormick
Laboratory Principal

ISO 17025 ACCREDITED LABORATORY

US Army Corps of Engineers

Testing, Engineering & Consulting Services, Inc.
235 Buford Drive, Lawrenceville, GA 30046
770-995-8000 | 770-995-8[illegible] | www.tecservices.com

AASHTO ASTM INTERNATIONAL

INDIVIDUAL AGGREGATE GRADING

Project :	QC - Quality Control	Source :	Tuckahoe Sand Concrete Sand
Client :	Quality Control	Total wt:	504.50

Sample Data

Sample ID :	1A	Aggregate Spec :	ASTM C-33 Concrete Sand
Date sampled :	07/26/2017	Aggregate Name :	TSG Concrete Sand

Grading

Sieve	Ind. Wt. Retained	Cum. Wt. Retained	Ind. % Retained	Cum. % Retained	Cum. % Passing	Cum. % passing Min. Spec.	Cum. % passing Max. Spec.
3/8"					100.0	100.0	100.0
# 4	13.2	13.2	2.6	2.6	97.4	95.0	100.0
# 8	51.9	65.1	10.3	12.9	87.1	80.0	100.0
# 16	90.0	155.1	17.8	30.7	69.3	50.0	85.0
# 30	96.5	251.6	19.1	49.9	50.1	25.0	60.0
# 50	146.2	397.8	29.0	78.9	21.1	10.0	30.0
# 100	94.9	492.7	18.8	97.7	2.3	2.0	10.0
# 200	9.9	502.6	2.0	99.6	0.4		3.0
PAN	1.6	504.2		100			
Total :	504.200		99				

GRADING CHART

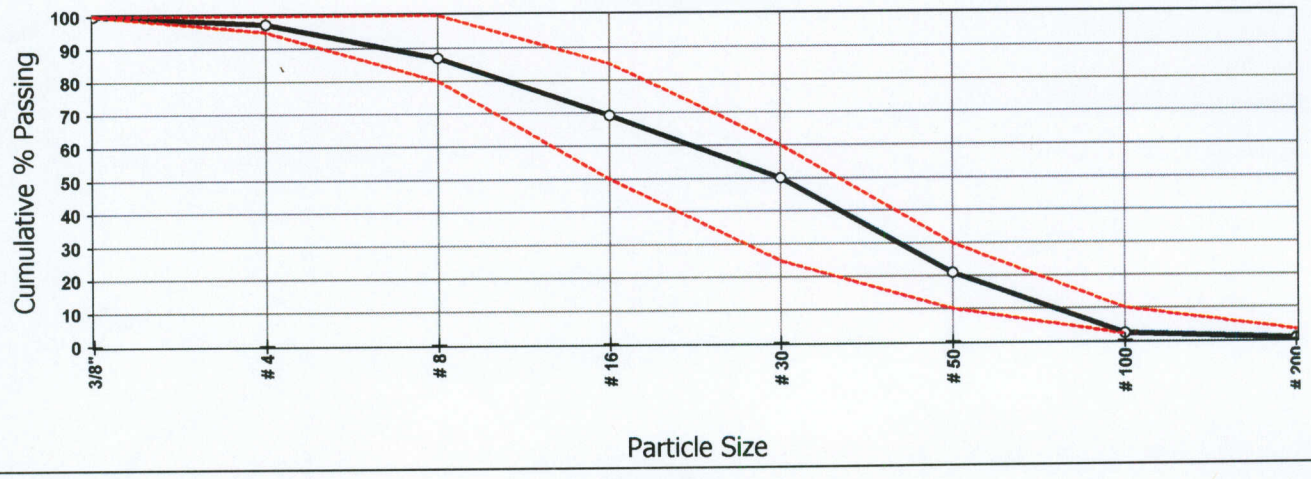

Remarks

ABSORPTION %: .4%	UNIT WEIGHT: 100	ALKALI-SILICA REACTION: .17
BULK SPECIFIC GRAVITY: 2.621	DRY RODDED UNIT WEIGHT: 107	CLAY LUMPS & FRIABLES %: .1%
SSD SPECIFIC GRAVITY: 2.631	SAND EQUIVALENCY TEST: 91	ORGANIC IMPURITIES: CLEAR
APPARENT SPECIFIC GRAVITY: 2.650	UNCOMPACTED VOIDS: 41.8	FM: 2.73 FM Specs: 2.3 - 3.1

Reported by : James Laus Date : 08/10/2017 Verified by : _____

INDIVIDUAL AGGREGATE GRADING

Project :	QC - Quality Control	Source :	New Enterprise Stone & Lime Co.
Client :	Quality Control	Total wt:	24.30

Sample Data

Sample ID :	1A	Aggregate Spec :	#8 Crushed Stone
Date sampled :	03/05/2018	Aggregate Name :	New Enterprise

Grading

Sieve	Ind. Wt. Retained	Cum. Wt. Retained	Ind. % Retained	Cum. % Retained	Cum. % Passing	Cum. % passing Min. Spec.	Cum. % passing Max. Spec.
1/2"					100.0	100.0	100.0
3/8"	2.7	2.7	11.1	11.1	88.9	85.0	100.0
# 4	15.8	18.5	65.0	76.1	23.9	10.0	30.0
# 8	5.1	23.6	21.0	97.1	2.9		10.0
# 16	0.4	24.0	1.6	98.8	1.2		5.0
PAN	0.3	24.3	1	100			
Total :	24.300		99				

GRADING CHART

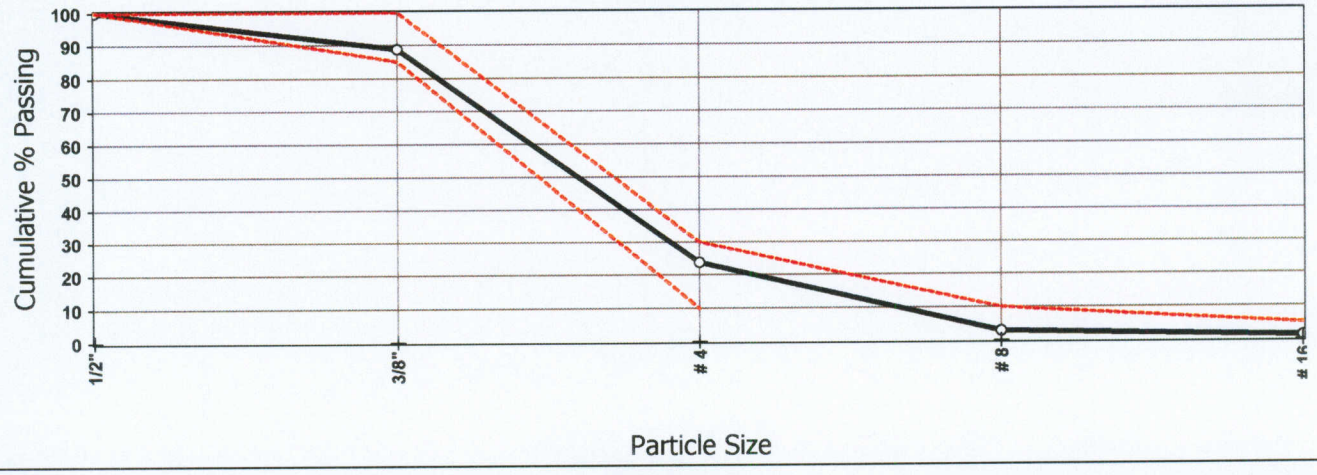

Remarks

Class Type Aggregates: 4S	ApparentSpecific Gravity: 2.781	Uncompacted Voids: 49
Absorption: .4%	Unit Weight: 88	Alkali-Silica Reactiom: .13
Bulk Specific Gravity: 2.651	Dry Rodded Unit Weight: 98	Clay Lumps & Friables: 0%
SSD Specific Gravity: 2.761	LA Abrassion: 19	Organic Impurities: Clear

Reported by : James Laus Date : 03/05/2018 Verified by : _____

INDIVIDUAL AGGREGATE GRADING

Project :	QC - Quality Control	Source :	New Enterprise Stone & Lime Co.
Client :	Quality Control	Total wt:	22.50

Sample Data

Sample ID :	1A	Aggregate Spec :	ASTM C-33 #57 Stone
Date sampled :	03/12/2018	Aggregate Name :	New Enterprise

Grading

Sieve	Ind. Wt. Retained	Cum. Wt. Retained	Ind. % Retained	Cum. % Retained	Cum. % Passing	Cum. % passing Min. Spec.	Cum. % passing Max. Spec.
1 1/2"					100.0	100.0	100.0
1"	0.2	0.2	0.9	0.9	99.1	95.0	100.0
3/4"	5.2	5.4	23.1	24.0	76.0		
1/2"	5.5	10.9	24.4	48.4	51.6	25.0	60.0
3/8"	6.1	17.0	27.1	75.6	24.4		
# 4	3.7	20.7	16.4	92.0	8.0		10.0
# 8	1.2	21.9	5.3	97.3	2.7		5.0
PAN	0.6	22.5	3	100			
Total :	22.500		100				

GRADING CHART

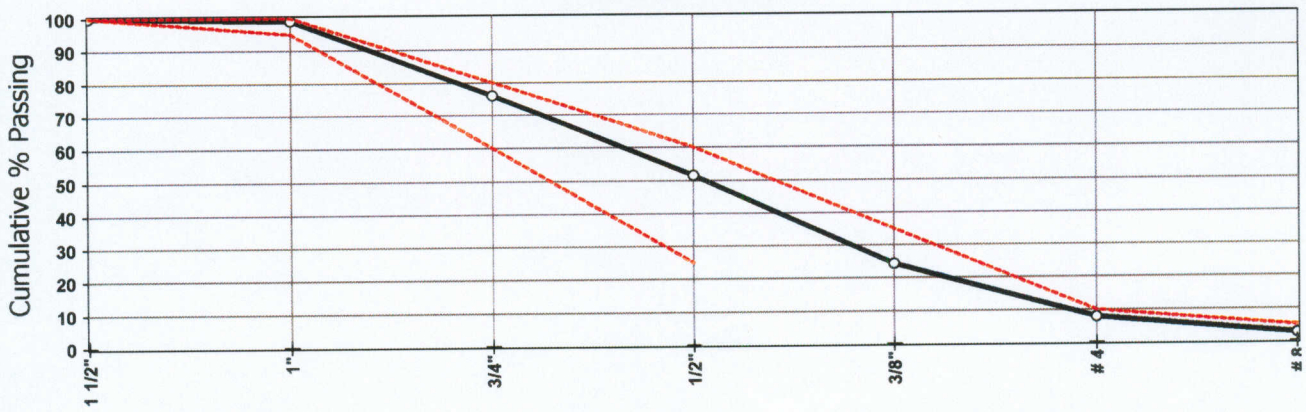

Particle Size

Remarks

Class Type Aggregate: 4S	Apparent Specific Gravity: 2.781	Uncompacted Voids: 49
Absorption: .4%	Unit Weight: 88	Alkali-Silica Reaction: .13
Bulk Specific Gravity: 2.751	Dry Rodded Unit Weight: 98	Clay Lumps & Fryables: 0%
SSD Specific Gravity: 2.761	LA Abrassion: 19	Organic Inpurities: Clear

Reported by : James Laus Date : 03/05/2018 Verified by : _____

BASF

We create chemistry

May 22, 2018

Compatibility for Use
BASF Corporation Admixtures for Concrete
MasterPozzolith 700 admixture, MasterGlenium 7500 admixture, MasterSet AC 534 admixture, MasterSet R 100 admixture, MasterGlenium 7620 admixture, MasterAir AE 100 admixture, MasterSet DELVO admixture, MasterLife CI 30 admixture, MasterSet FP20 admixture, MasterSet AC 122 admixture, MasterLife 300D admixture and MasterAir AE 90 admixture

Penn-Jersey

TO WHOM IT MAY CONCERN:

I, Mark E. Piechuta, Sr. Technical Marketing Specialist for BASF Corporation, Cleveland, Ohio, certify:

That, MasterPozzolith 700 admixture, MasterGlenium 7500 admixture, MasterSet AC 534 admixture, MasterSet R 100 admixture, MasterGlenium 7620 admixture, MasterAir AE 100 admixture, MasterSet DELVO admixture, MasterLife CI 30 admixture, MasterSet FP20 admixture, MasterSet AC 122 admixture, MasterLife 300D admixture and MasterAir AE 90 admixture are BASF admixtures for concrete; and

That, various combinations of MasterPozzolith 700 admixture, MasterGlenium 7500 admixture, MasterSet AC 534 admixture, MasterSet R 100 admixture, MasterGlenium 7620 admixture, MasterAir AE 100 admixture, MasterSet DELVO admixture, MasterLife CI 30 admixture, MasterSet FP20 admixture, MasterSet AC 122 admixture, MasterLife 300D admixture and MasterAir AE 90 admixture are compatible with each other in concrete if each is added separately to the concrete mix; and

That, MasterPozzolith 700 admixture, MasterGlenium 7500 admixture, MasterSet AC 534 admixture, MasterSet R 100 admixture, MasterGlenium 7620 admixture, MasterAir AE 100 admixture, MasterSet DELVO admixture, MasterLife CI 30 admixture, MasterSet FP20 admixture, MasterSet AC 122 admixture, MasterLife 300D admixture and MasterAir AE 90 admixture should be compatible with usual concrete ingredients (i.e., cement, fly ash, fine and coarse aggregates) that meet their respective, appropriate ASTM Standard Specifications; and

That, the best way to evaluate compatibility and performance of products or to determine plastic and hardened properties in concrete is to run trial mixes.

Mark E. Piechuta

Mark E. Piechuta
Sr. Technical Marketing Specialist

BASF Corporation
Admixture Systems
23700 Chagrin Blvd.
Cleveland, OH 44122
Telephone: (216) 839-7500

MASTER® BUILDERS SOLUTIONS

BASF

We create chemistry

3	03 30 00	Cast-in-Place Concrete
	03 40 00	Precast Concrete
4	03 70 00	Mass Concrete
	04 05 16	Masonry Grouting

MasterGlenium® 7500

Full-Range Water-Reducing Admixture

Formerly GLENIUM 7500*

Description

MasterGlenium 7500 full-range water-reducing admixture is very effective in producing concrete mixtures with different levels of workability including applications that require self-consolidating concrete (SCC). MasterGlenium 7500 admixture meets ASTM C 494/C 494M compliance requirements for Type A, water-reducing, and Type F, high-range water-reducing, admixtures.

Applications

Recommended for use in:

- Concrete with varying water reduction requirements (5-40%)
- Concrete where control of workability and setting time is critical
- Concrete where high flowability, increased stability, high-early and ultimate strengths, and improved durability are needed
- Producing self-consolidating concrete (SCC)
- Strength-on-demand concrete, such as 4x4™ Concrete
- Pervious concrete

Features

MasterGlenium 7500 full-range water-reducing admixture is based on the next generation of polycarboxylate technology found in all of the MasterGlenium 7000 series products. This technology combines state-of-the-art molecular engineering with a precise understanding of regional cements to provide specific and exceptional value to all phases of the concrete construction process.

- Dosage flexibility for normal, mid-range and high-range applications
- Excellent early strength development
- Controls setting characteristics
- Optimizes slump retention/setting relationship
- Consistent air entrainment

Benefits

- Faster turnover of forms due to accelerated early strength development
- Reduces finishing labor costs due to optimized set times
- Use in fast track construction
- Minimizes the need for slump adjustments at the jobsite
- Less jobsite QC support required
- Fewer rejected loads
- Optimizes concrete mixture costs

Performance Characteristics

Concrete produced with MasterGlenium 7500 admixture achieves significantly higher early age strength than first generation polycarboxylate high-range water-reducing admixtures. MasterGlenium 7500 admixture also strikes the perfect balance between workability retention and setting characteristics in order to provide efficiency in placing and finishing concrete. The dosage flexibility of MasterGlenium 7500 allows it to be used as a normal, mid-range, and high-range water reducer.

MASTER® BUILDERS SOLUTIONS

Guidelines for Use

Dosage: MasterGlenium 7500 admixture has a recommended dosage range of 2-15 fl oz/cwt (130-975 mL/100 kg) of cementitious materials. For most mid- to high-range applications, dosages in the range of 5-8 fl oz/cwt (325-520 mL/100 kg) will provide excellent performance. For high performance and producing self-consolidating concrete mixtures, dosages of up to 12 fl oz/cwt (780 mL/100 kg) of cementitious materials can be utilized. Because of variations in concrete materials, jobsite conditions and/or applications, dosages outside of the recommended range may be required. In such cases, contact your local sales representative.

Mixing: MasterGlenium 7500 admixture can be added with the initial batch water or as a delayed addition. However, optimum water reduction is generally obtained with a delayed addition.

Product Notes

Corrosivity – Non-Chloride, Non-Corrosive: MasterGlenium 7500 admixture will neither initiate nor promote corrosion of reinforcing steel embedded in concrete, prestressing steel or of galvanized steel floor and roof systems. Neither calcium chloride nor other chloride-based ingredients are used in the manufacture of MasterGlenium 7500 admixture.

Compatibility: MasterGlenium 7500 admixture is compatible with most admixtures used in the production of quality concrete, including normal, mid-range and high-range water-reducing admixtures, air-entrainers, accelerators, retarders, extended set control admixtures, corrosion inhibitors, and shrinkage reducers.

Do not use MasterGlenium 7500 admixture with admixtures containing beta-naphthalene sulfonate. Erratic behaviors in slump, workability retention and pumpability may be experienced.

Storage and Handling

Storage Temperature: MasterGlenium 7500 admixture must be stored at temperatures above 40 °F (5 °C). If MasterGlenium 7500 admixture freezes, thaw and reconstitute by mechanical agitation.

Shelf Life: MasterGlenium 7500 admixture has a minimum shelf life of 9 months. Depending on storage conditions, the shelf life may be greater than stated. Please contact your local sales representative regarding suitability for use and dosage recommendations if the shelf life of MasterGlenium 7500 admixture has been exceeded.

Packaging

MasterGlenium 7500 admixture is supplied in 55 gal (208 L) drums, 275 gal (1040 L) totes and by bulk delivery.

Related Documents

Safety Data Sheets: MasterGlenium 7500 admixture

Additional Information

For additional information on MasterGlenium 7500 admixture or on its use in developing concrete mixtures with special performance characteristics, contact your local sales representative.

The Admixture Systems business of BASF's Construction Chemicals division is the leading provider of solutions that improve placement, pumping, finishing, appearance and performance characteristics of specialty concrete used in the ready-mixed, precast, manufactured concrete products, underground construction and paving markets. For over 100 years we have offered reliable products and innovative technologies, and through the Master Builders Solutions brand, we are connected globally with experts from many fields to provide sustainable solutions for the construction industry.

BASF

We create chemistry

February 10, 2018

Penn Jersey Building Materials

Certificate of Conformance
MasterGlenium® 7500 Admixture (formerly Glenium 7500)
BASF Corporation Admixture for Concrete

I, Richard Hubbard, Sr. Technical Marketing Specialist for BASF Corporation, Cleveland, Ohio, certify:

That MasterGlenium 7500 admixture is a full-range water-reducing admixture manufactured by BASF Corporation; and

That MasterGlenium 7500 admixture and Glenium 7500 admixture are the same product having identical composition, differing only in designation; and

That no calcium chloride or chloride based ingredient is used in the manufacture of MasterGlenium 7500 admixture; and

That MasterGlenium 7500 admixture, based on the chlorides originating from all the ingredients used in its manufacture, contributes less than 0.00017 percent (1.7 ppm) chloride ions by weight of the cement when used at the rate of 65 mL per 100 kg (1 fluid ounce per 100 pounds) of cement; and

That MasterGlenium 7500 admixture meets the requirements for a Type A, Water-Reducing and Type F, Water-Reducing, High Range Admixture specified in ASTM C494/C494M, the Standard Specification for Chemical Admixtures for Concrete, as well as the requirements for Type A and Type F admixtures as specified in Corps of Engineers' CRD-C 87 and AASHTO M194.

Richard Hubbard III

Richard Hubbard
Sr. Technical Marketing Specialist

BASF Corporation
Admixtures Systems
23700 Chagrin Boulevard
Cleveland, Ohio 44122
Telephone (216) 839-7500

MASTER® BUILDERS SOLUTIONS

BASF

We create chemistry

3

03 30 00	Cast-in-Place Concrete
03 40 00	Precast Concrete

MasterSet® AC 534

Accelerating Admixture

Formerly Pozzolith NC 534*

Description

MasterSet AC 534 patented, ready-to-use, liquid admixture is formulated to accelerate time of setting and to increase early concrete strengths. MasterSet AC 534 admixture does not contain calcium chloride and is formulated to comply with ASTM C 494/C 494M Type C, accelerating, admixture requirements.

Applications

Recommended for use in:

- Reinforced, precast, pumped, flowable, lightweight or normal weight concrete and shotcrete (wet mix)
- Concrete placed on galvanized steel floor and roof systems which are left in place
- Prestressed concrete
- Fast-track concrete construction
- Concrete subject to chloride ion constraints
- 4x4™ Concrete
- Self-consolidating concrete (SCC)
- Pervious concrete

Features

- Accelerated setting time across a wide range of temperatures
- Increased early compressive and flexural strengths

Benefits

- Earlier finishing of slabs — reduced labor costs
- Reduced in-place concrete costs
- Reduced or eliminated heating and protection time in cold weather
- Earlier stripping and reuse of forms
- Superior finishing characteristics for flatwork and cast surfaces

Performance Characteristics

Mixture Data: 453 lb/yd³ (269 kg/m³) of Type I cement; 3-4 in. (75-100 mm) slump; concrete temperature 74 °F (23 °C); ambient temperature 50 and 75 °F (10 and 24 °C); non-air-entrained concrete.

Setting time	@ 50 °F (10 °C)	
	Initial Set (h:min)	Difference (h:min))
Plain	13:44	REF
MasterSet AC 534 admixture @		
› 20 fl oz/cwt (1,300 mL/100 kg)	7:11	- 6:33
› 40 fl oz/cwt (2,600 mL/100 kg)	6:05	- 7:39

Setting time	@ 75 °F (24 °C)	
	Initial Set (h:min)	Difference (h:min))
Plain	8:18	REF
MasterSet AC 534 admixture @		
› 20 fl oz/cwt (1,300 mL/100 kg)	4:59	- 3:19
› 40 fl oz/cwt (2,600 mL/100 kg)	4:18	- 4:00

MASTER® BUILDERS SOLUTIONS

Guidelines for Use

Dosage: The recommended dosage range for MasterSet AC 534 admixture is 10-45 fl oz/cwt (0.65 – 2.9 L/100 kg) of cementitious materials for most concrete mixtures using average concrete ingredients. Because of variations in job conditions and concrete materials, dosage rates other than the recommended amounts may be required. In such cases, contact your local sales representative.

The maximum dosage of MasterSet AC 534 in potable water applications that require the use of NSF Certified products is 30 fl oz/cwt (2.0 L/kg) of cementitious materials. For specialty concrete mixtures such as 4x4 Concrete, dosages up to 100 fl oz/cwt (6.5 L/100 kg) may be required.

Product Notes

Corrosivity – Non-Chloride, Non-Corrosive: MasterSet AC 534 admixture will neither initiate nor promote corrosion of reinforcing steel in concrete.

Compatibility: MasterSet AC 534 admixture may be used in combination with any BASF admixtures. When used in conjunction with other admixtures, each admixture must be dispensed separately into the mixture.

Storage and Handling

Storage Temperature: MasterSet AC 534 admixture should be stored above freezing temperatures. If MasterSet AC 534 admixture freezes, thaw at 35 °F (2 °C) or above and completely reconstitute by mild mechanical agitation. **Do not use pressurized air for agitation.**

Shelf Life: MasterSet AC 534 admixture has a minimum shelf life of 18 months. Depending on storage conditions, the shelf life may be greater than stated. Please contact your local sales representative regarding suitability for use and dosage recommendations if the shelf life of MasterSet AC 534 admixture has been exceeded.

Packaging

This product is supplied in 55 gal (208 L) drums, 275 gal (1040 L) totes and by bulk delivery.

Related Documents

Safety Data Sheets: MasterSet AC 534 admixture

BASF

We create chemistry

February 10, 2018

Penn Jersey Building Materials

Certificate of Conformance
MasterSet® AC 534 Admixture (formerly Pozzolith NC534)
BASF Corporation Admixture for Concrete

I, Richard Hubbard, Sr. Technical Marketing Specialist for BASF Corporation, Cleveland, Ohio, certify:
That MasterSet AC 534 admixture is a non-chloride Set Accelerating Admixture for concrete; and
That MasterSet AC 534 and Pozzolith NC534 admixture are the same product having identical composition, differing only in designation; and
That no calcium chloride or chloride based ingredient is used in the manufacture of MasterSet AC 534 admixture; and
That MasterSet AC 534 admixture, based on the chlorides originating from all the ingredients used in its manufacture, contributes less than 0.000045 percent (0.45 ppm) chloride ions by weight of the cement when used at the rate of 65 mL per 100 kg (1 fluid ounce per 100 pounds) of cement; and
That MasterSet AC 534 admixture meets the requirements for a Type C, Accelerating Admixture specified in ASTM C494/C494M and AASHTO M194, the Standard Specification for Chemical Admixtures for Concrete, as well as the requirements for Type C admixtures as specified in Corps of Engineers' CRD-C 87.

Richard Hubbard III

Richard Hubbard
Sr. Technical Marketing Specialist

BASF Corporation
Admixtures Systems
23700 Chagrin Boulevard
Cleveland, Ohio 44122
Telephone (216) 839-7500

MASTER® BUILDERS SOLUTIONS

BASF

We create chemistry

3	03 30 00	Cast-in-Place Concrete
	03 40 00	Precast Concrete
	03 70 00	Mass Concrete

MasterSet® R 100

Set Retarding Admixture

Formerly Pozzolith 100 XR*

Description

MasterSet R 100 ready-to-use liquid admixture is used for producing more uniform and predictable quality concrete. Placing and finishing requirements are facilitated because this admixture retards setting time. MasterSet R 100 admixture meets ASTM C 494/C 494M requirements for Type B, retarding, and Type D, water-reducing and retarding, admixtures.

Applications

Recommended for use in:

- Prestressed concrete
- Precast concrete
- Reinforced concrete
- Shotcrete
- Lightweight concrete
- Pumped concrete
- 4x4™ Concrete
- Pervious concrete
- Self-consolidating concrete

Features

- Reduced water content required for a given workability
- Retarded setting characteristics
- Controlled retardation – depending on the addition rate
- Full-form deflection can take place (before concrete sets) in extended pours for bridge decks, cantilevers, nonshored structural elements, etc.

Benefits

- Improved workability
- Reduced segregation
- Superior finishing characteristics for flatwork and cast surfaces
- Flexibility in scheduling of placing and finishing operations
- Offsets effects of early stiffening during extended delays between mixing and placing
- Helps eliminate cold joints
- Peak temperature and/or rate of temperature rise in mass concrete lowered thereby reducing thermal cracking
- Increased compressive and flexural strengths

MASTER® BUILDERS SOLUTIONS

Performance Characteristics

Rate of Hardening: The temperature of the concrete mixture and the ambient temperature (forms, earth, reinforcement, air, etc.) affect the hardening rate of concrete. At higher temperatures, concrete stiffens more rapidly, which may cause problems with placing and finishing. MasterSet R 100 admixture retards the set of concrete. Within the normal dosage range, it will generally extend the setting time of concrete containing normal portland cement approximately 1.5 to 8 hours compared to that of a plain concrete mixture, depending on job materials and temperatures. Trial mixtures should be made with materials approximating job conditions to determine the dosage required.

Compressive Strength: Concrete produced with MasterSet R 100 admixture will have rapid strength development after initial set occurs. If retardation is within the normal ASTM C 494/C 494M Types B and D specifications, MasterSet R 100 admixture will develop higher early (24-hour) and ultimate strengths than plain concrete when used within the recommended dosage range and under normal, comparable curing conditions.

When MasterSet R 100 admixture is used in heat-cured concrete, the length of the preheating period should be increased until initial set of the concrete is achieved. The actual heat-curing period is then reduced accordingly to maintain existing production cycles without sacrificing early or ultimate strengths.

Guidelines for Use

Dosage: MasterSet R 100 admixture is recommended for use at a dosage of 3 ± 1 fl oz/cwt (195 ± 65 mL/100 kg) of cementitious materials for most concrete mixtures using typical concrete ingredients. Because of variations in job conditions and concrete materials, dosage rates other than the recommended amounts may be required. In such cases, contact your local sales representative.

MasterSet R 100 admixture may be used at less than the recommended dosage for the purpose of retardation only.

Product Notes

Corrosivity – Non-Chloride, Non-Corrosive: MasterSet R 100 admixture will neither initiate nor promote corrosion of reinforcing steel in concrete. This admixture does not contain intentionally-added calcium chloride or other chloride-based ingredients.

Compatibility: MasterSet R 100 admixture may be used in combination with any BASF admixtures. When used in conjunction with other admixtures, each admixture must be dispensed separately into the mixture.

Storage and Handling

Storage Temperature: MasterSet R 100 admixture should be stored above freezing temperatures. If this product freezes, thaw at 35 °F (2 °C) or above and completely reconstitute by mild mechanical agitation. **Do not use pressurized air for agitation.**

Shelf Life: MasterSet R 100 admixture has a minimum shelf life of 18 months. Depending on storage conditions, the shelf life may be greater than stated. Please contact your local sales representative regarding suitability for use and dosage recommendations if the shelf life of MasterSet R 100 admixture has been exceeded.

Packaging

MasterSet R 100 admixture is supplied in 55 gal (208 L) drums, 275 gal (1040 L) totes and by bulk delivery.

Related Documents

Safety Data Sheets: MasterSet R 100 admixture

BASF

We create chemistry

February 10, 2018

Penn Jersey Building Materials

Certificate of Conformance
MasterSet® R 100 Admixture (formerly Pozzolith 100 XR)
BASF Corporation Admixture for Concrete

I, Richard Hubbard, Sr. Technical Marketing Specialist for BASF Corporation, Cleveland, Ohio, certify:
That MasterSet R 100 admixture is a BASF Corporation Set Retarding Admixture for concrete; and
That MasterSet R 100 and Pozzolith 100XR admixture are the same product having identical composition, differing only in designation; and
That no calcium chloride or chloride based ingredient is used in the manufacture of MasterSet R 100 admixture; and
That MasterSet R 100 admixture, based on the chlorides originating from all the ingredients used in its manufacture, contributes less than 0.00014 percent (1.4 ppm) chloride ions by weight of the cement when used at the rate of 65 mL per 100 kg (1 fluid ounce per 100 pounds) of cement; and
That MasterSet R 100 admixture meets the requirements for a Type B, Retarding and Type D, Water-Reducing and Retarding Admixture specified in ASTM C494/C494M and AASHTO M194, the Standard Specification for Chemical Admixtures for Concrete, as well as the requirements for Type B and Type D admixtures as specified in Corps of Engineers' CRD-C 87.

Richard Hubbard III

Richard Hubbard
Sr. Technical Marketing Specialist

BASF Corporation
Admixtures Systems
23700 Chagrin Boulevard
Cleveland, Ohio 44122
Telephone (216) 839-7500

MASTER® BUILDERS SOLUTIONS

BASF

We create chemistry

3	03 30 00	**Cast-in-Place Concrete**
	03 40 00	**Precast Concrete**
	03 70 00	**Mass Concrete**

MasterAir® AE 90

Air-Entraining Admixture

Formerly MB-AE 90*

Description

MasterAir AE 90 air-entraining admixture is for use in concrete mixtures. It meets the requirements of ASTM C 260, AASHTO M 154 and CRD-C 13.

Applications

Recommended for use in:

- Concrete exposed to cyclic freezing and thawing
- Production of high-quality normal or lightweight concrete (heavyweight concrete normally does not contain entrained air)

Features

- Ready-to-use in the proper concentration for rapid, accurate dispensing

Benefits

- Improved resistance to damage from cyclic freezing and thawing
- Improved resistance to scaling from deicing salts
- Improved plasticity and workability
- Reduced permeability – increased watertightness
- Reduced segregation and bleeding

Performance Characteristics

Concrete durability research has established that the best protection for concrete from the adverse effects of freezing and thawing cycles and deicing salts results from: proper air content in the hardened concrete, a suitable air-void system in terms of bubble size and spacing, and adequate concrete strength, assuming the use of sound aggregates and proper mixing, transporting, placing, consolidation, finishing and curing techniques. MasterAir AE 90 admixture can be used to obtain adequate freeze-thaw durability in a properly proportioned concrete mixture, if standard industry practices are followed.

Air Content Determination: The total air content of normal weight concrete should be measured in strict accordance with ASTM C 231, "Standard Test Method for Air Content of Freshly Mixed Concrete by the Pressure Method" or ASTM C 173/C 173M, "Standard Test Method for Air Content of Freshly Mixed Concrete by the Volumetric Method." The air content of lightweight concrete should only be determined using the Volumetric Method. The air content should be verified by calculating the gravimetric air content in accordance with ASTM C 138/C 138M, "Standard Test Method for Density (Unit Weight), Yield, and Air Content (Gravimetric) of Concrete." If the total air content, as measured by the Pressure Method or Volumetric Method and as verified by the Gravimetric Method, deviates by more than 1.5%, the cause should be determined and corrected through equipment calibration or by whatever process is deemed necessary.

MASTER® BUILDERS SOLUTIONS

Guidelines for Use

Dosage: There is no standard dosage for MasterAir AE 90 admixture. The exact quantity of air-entraining admixture needed for a given air content of concrete varies because of differences in concrete-making materials and ambient conditions. Typical factors that might influence the amount of air entrained include: temperature, cementitious materials, sand gradation, sand-aggregate ratio, mixture proportions, slump, means of conveying and placement, consolidation and finishing technique. The amount of MasterAir AE 90 admixture used will depend upon the amount of entrained air required under actual job conditions. In a trial mixture, use 0.25 to 4 fl oz/cwt (16-260 mL/100 kg) of cementitious material. Measure the air content of the trial mixture, and, if needed, either increase or decrease the quantity of MasterAir AE 90 admixture to obtain the desired air content.

In mixtures containing water-reducing or set-control admixtures, the amount of MasterAir AE 90 admixture needed may be somewhat less than the amount required in plain concrete.

Due to possible changes in the factors that can affect the dosage of MasterAir AE 90 admixture, frequent air content checks should be made during the course of the work. Adjustments to the dosage should be based on the amount of entrained air required in the mixture at the point of placement.

If an unusually high or low dosage of MasterAir AE 90 admixture is required to obtain the desired air content, consult your local sales representative. In such cases, it may be necessary to determine that, in addition to a proper air content in the fresh concrete, a suitable air-void system is achieved in the hardened concrete.

Dispensing and Mixing: Add MasterAir AE 90 admixture to the concrete mixture using a dispenser designed for air-entraining admixtures, or add manually using a suitable measuring device that ensures accuracy within plus or minus 3% of the required amount.

For optimum, consistent performance, the air-entraining admixture should be dispensed on damp, fine aggregate. If the concrete mixture contains fine lightweight aggregate, field evaluations should be conducted to determine the best method to dispense the air-entraining admixture.

Precaution

In a 2005 publication from the Portland Cement Association (PCA R&D Serial No. 2789), it was reported that problematic air-void clustering that can potentially lead to above normal decreases in strength was found to coincide with late additions of water to air-entrained concretes. Late additions of water include the conventional practice of holding back water during batching for addition at the jobsite. Therefore, caution should be exercised with delayed additions of water to air-entrained concrete. Furthermore, an air content check should be performed after post-batching addition of any other materials to an air-entrained concrete mixture.

Product Notes

Corrosivity – Non-Chloride, Non-Corrosive: MasterAir AE 90 admixture will neither initiate nor promote corrosion of reinforcing and prestressing steel embedded in concrete, or of galvanized floor and roof systems. No calcium chloride or other chloride-based ingredients are used in the manufacture of this admixture.

Compatibility: MasterAir AE 90 admixture may be used in combination with any BASF admixture, unless stated otherwise on the data sheet for the other product. When used in conjunction with other admixtures, each admixture must be dispensed separately into the concrete mixture.

Storage and Handling

Storage Temperature: MasterAir AE 90 admixture should be stored and dispensed at 31 °F (-0.5 °C) or higher. Although freezing does not harm this product, precautions should be taken to protect it from freezing. If MasterAir AE 90 admixture freezes, thaw at 35 °F (2 °C) or above and completely reconstitute by mild mechanical agitation. Do not use pressurized air for agitation.

Shelf Life: MasterAir AE 90 admixture has a minimum shelf life of 18 months. Depending on storage conditions, the shelf life may be greater than stated. Please contact your local sales representative regarding suitability for use and dosage recommendations if the shelf life of MasterAir AE 90 admixture has been exceeded.

Safety: Chemical goggles and gloves are recommended when transferring or handling this material.

BASF

We create chemistry

February 10, 2018

Penn Jersey Building Materials

Certificate of Conformance
MasterAir® AE 90 Admixture (formerly MB-AE 90)
BASF Corporation Air-Entraining Admixture for Concrete"

I, Richard Hubbard, Sr. Technical Marketing Specialist for BASF Corporation, Cleveland, Ohio, certify:
That MasterAir AE 90 admixture is a BASF Corporation Air-Entraining Admixture for concrete; and
That MasterAir AE 90 and MB AE 90 admixture are the same product having identical composition, differing only in designation; and
That no calcium chloride or chloride based ingredient is used in the manufacture of MasterAir AE 90 admixture; and
That MasterAir AE 90 admixture, based on the chlorides originating from all the ingredients used in its manufacture, contributes less than 0.000068 percent (0.68 ppm) chloride ions by weight of the cement when used at the rate of 65 mL per 100 kg (1 fluid ounce per 100 pounds) of cement; and
That MasterAir AE 90 admixture meets the requirements of ASTM C260, the Standard Specification for Air-Entraining Admixtures for Concrete, as well as the requirements for air-entraining admixtures as specified in Corps of Engineers' CRD-C 13 and AASHTO M154.

Richard Hubbard III

Richard Hubbard
Sr. Technical Marketing Specialist

BASF Corporation
Admixtures Systems
23700 Chagrin Boulevard
Cleveland, Ohio 44122
Telephone (216) 839-7500

MASTER® BUILDERS SOLUTIONS

AGGREGATES & SOILS TESTING CO.

PHYSICAL TESTING OF CRUSHED STONE AND SOILS
AASHTO ACCREDITED • AMRL INSPECTED

817 Magaro Road • Enola, PA 17025 • 717-412-0998 • www.aggregatesandsoilstesting.com

Michael Oswald
New Enterprise Stone & Lime Co., Inc. 1
167 New Enterprise Way
Leesport, PA 19533

AST #: 20991-1
RECEIVED: January 4, 2018
TESTED: January 24, 2018
SUBMITTED BY CLIENT

SODIUM SULFATE SOUNDNESS - PTM 510

#57

SIZE FRACTION	MASS BEFORE	# OF PCS	MASS AFTER	# OF PCS	PERCENT LOSS	STANDARD GRADING	CORRECTED LOSS
1.5" x 3/4"	1508.6	115	1506.2	0	0.2	0.368	0.1
3/4" x 3/8"	1003.0		1000.7		0.2	0.369	0.1
3/8" x #4	300.2		296.5		1.2	0.263	0.3

TOTAL PERCENT LOSS 0.5

SUBMITTED BY: _____
Ken McNulty, Laboratory Manager

DATE: 1/24/18

AGGREGATES & SOILS TESTING CO.

PHYSICAL TESTING OF CRUSHED STONE AND SOILS
AASHTO ACCREDITED • AMRL INSPECTED

817 Magaro Road • Enola, PA 17025 • 717-412-0998 • www.aggregatesandsoilstesting.com

Michael Oswald
New Enterprise Stone & Lime Co., Inc. 1
167 New Enterprise Way
Leesport, PA 19533

AST #: 20991-4
RECEIVED: January 4, 2018
TESTED: January 24, 2018
SUBMITTED BY CLIENT

FLAT & ELONGATED PARTICLES - ASTM D 4791 (B @ 5:1)

#57

SIZE FRACTION	MASS TESTED	MASS F & E	% F & E	SAMPLE GRADING	CORRECTED % F & E
1" x 3/4"	1179.3	0.0	0.9	0.065	0.1
3/4" x 1/2"	799.1	7.5	0.9	0.549	0.5
1/2" x 3/8"	277.7	8.1	2.9	0.220	0.6
3/8" x #4	142.4	6.2	4.4	0.166	0.7

WEIGHTED AVERAGE PERCENT FLAT & ELONGATED @ 5:1 1.9

SUBMITTED BY: _____
Ken McNulty, Laboratory Manager

DATE: 1/24/18

AGGREGATES & SOILS TESTING CO.

PHYSICAL TESTING OF CRUSHED STONE AND SOILS
AASHTO ACCREDITED • AMRL INSPECTED

817 Magaro Road • Enola, PA 17025 • 717-412-0998 • www.aggregatesandsoilstesting.com

Michael Oswald
New Enterprise Stone & Lime Co., Inc. 1
167 New Enterprise Way
Leesport, PA 19533

AST #: 20992-1
RECEIVED: January 4, 2018
TESTED: January 24, 2018
SUBMITTED BY CLIENT

SODIUM SULFATE SOUNDNESS - PTM 510
#8

SIZE FRACTION	MASS BEFORE	MASS AFTER	PERCENT LOSS
3/8" x #4	300.3	294.2	2.0

SUBMITTED BY: _____
Ken McNulty, Laboratory Manager

DATE: 1/24/18

AGGREGATES & SOILS TESTING CO.

PHYSICAL TESTING OF CRUSHED STONE AND SOILS
AASHTO ACCREDITED • AMRL INSPECTED

817 Magaro Road • Enola, PA 17025 • 717-412-0998 • www.aggregatesandsoilstesting.com

Michael Oswald
New Enterprise Stone & Lime Co., Inc. 1
167 New Enterprise Way
Leesport, PA 19533

AST #: 20992-4
RECEIVED: January 4, 2018
TESTED: January 24, 2018
SUBMITTED BY CLIENT

FLAT & ELONGATED PARTICLES - ASTM D 4791 (B @ 5:1)

#8

SIZE FRACTION	MASS TESTED	MASS F & E	% F & E	SAMPLE GRADING	CORRECTED % F & E
3/8" x #4	130.8	10.2	7.8	1.000	7.8

WEIGHTED AVERAGE PERCENT FLAT & ELONGATED @ 5:1	7.8

SUBMITTED BY: _____
Ken McNulty, Laboratory Manager

DATE: 1/24/18

900 Flex

	Combined % Passing	Individual Retained	Cumulative Retained
1.5"	100	0	0
1"	99.5	0.5	0.5
3/4"	86.5	13	13.5
1/2"	72.7	13.8	27.3
3/8"	56.5	16.2	43.5
#4	41	15.5	59
#8	32	10	69
#16	24.1	6.9	75.9
#30	17.4	6.7	82.6
#50	7.3	10.1	92.7
#100	0.8	6.5	99.2
#200	0.1	0.8	100

CF	0.63043	63.0435	Cement	529
WF	32		Fly Ash	176
ADJ WF	35.75			
Allowable Adj WF	37.7935			
Low	35.2935			
High	40.2935			

	Combined % Passing	Individual Retained	Cumulative Retained
1.5"	0	0	0
1"	0	0	0
3/4"	0	0	0
1/2"	0	0	0
3/8"	0	0	0
#4	0	0	0
#8	0	0	0
#16	0	0	0
#30	0	0	0
#50	0	0	0
#100	0	0	0
#200	0	0	0

CF	#DIV/0!	#DIV/0!	Cement	0
WF	0		Slab / Fly Ash	0
ADJ WF	-15			
Allowable Adj WF	#DIV/0!			
Low	#DIV/0!			
High	#DIV/0!			

	Density	Weight	Volume	
Cement	3.150	529	2.69	*(7.5 sks)*
Fly Ash	2.100	176	1.34	*25%*
#57	2.760	1,550	9.00	
#8	2.760	250	1.45	
Stone 3	-	-	-	*(10.45 cf)*
Sand	2.630	910	5.54	
Sand 2	-	-	-	*(5.54 cf)*
Water	8.345	315	5.05	*(37.7 gal)*
Total Air	6.00%		1.62	
	0.000	-	-	
Total		**3,730**	**26.70**	

Analysis		
Design Strength	900	psi
W/C Ratio	0.447	
Slump	4.0	inches
Unit Weight	139.7	lbs/cu ft
Total > #8	1,868.3	lbs
Coarseness	64.0%	
Workability	32.0%	2.1%
W-Adjusted	35.7%	5.8%
Mortar Fraction	59.2%	
Paste Fraction	34.0%	
Total Finess Modulus	5.34	

Admixture(s) 7500 BASF Glenium 0% **water reduction** **Max Size Aggregate** 1"

	#57	#8	Stone 3	Sand	Sand 2	% of Total Mix	
% Passing 3/8" Sieve	24.4	88.9	-	100.0	-	#57	33.7%
% Passing #8 Sieve	2.7	2.9	-	87.1	-	#8	5.4%
Fineness Modulus	6.88	5.83	-	2.73	1.00	Stone 3	0.0%
% Total Aggregate	56.3%	9.1%	0.0%	34.7%	0.0%	Sand	20.8%
Blend	86.1%	13.9%	0.0%	100.0%	0.0%	Sand 2	0.0%
Rock/Sand			65.3%		34.7%	Paste+Air	40.1%
						Fiber	0.0%
							100.0%

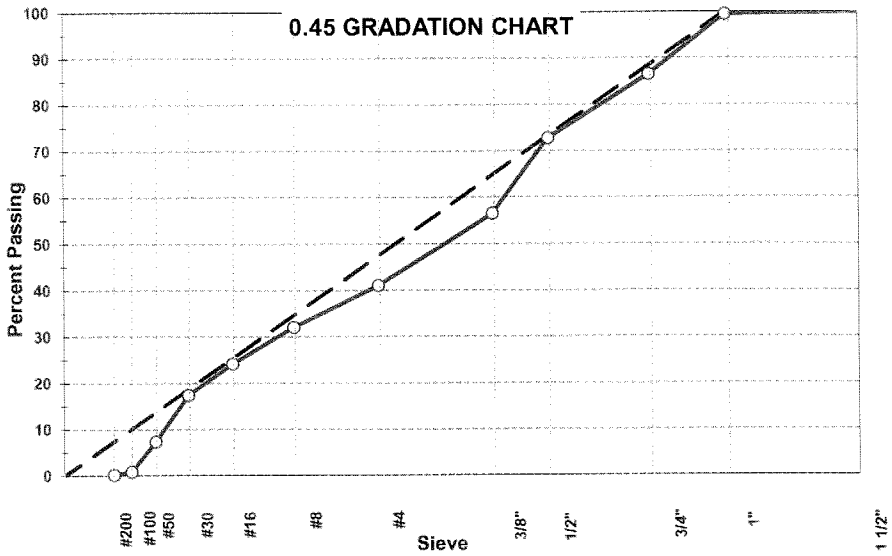

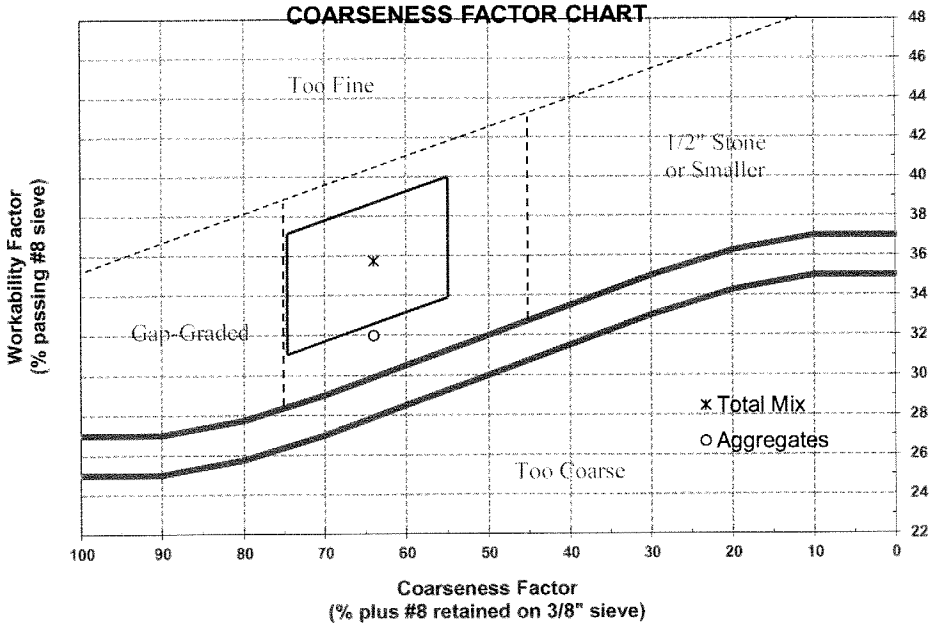

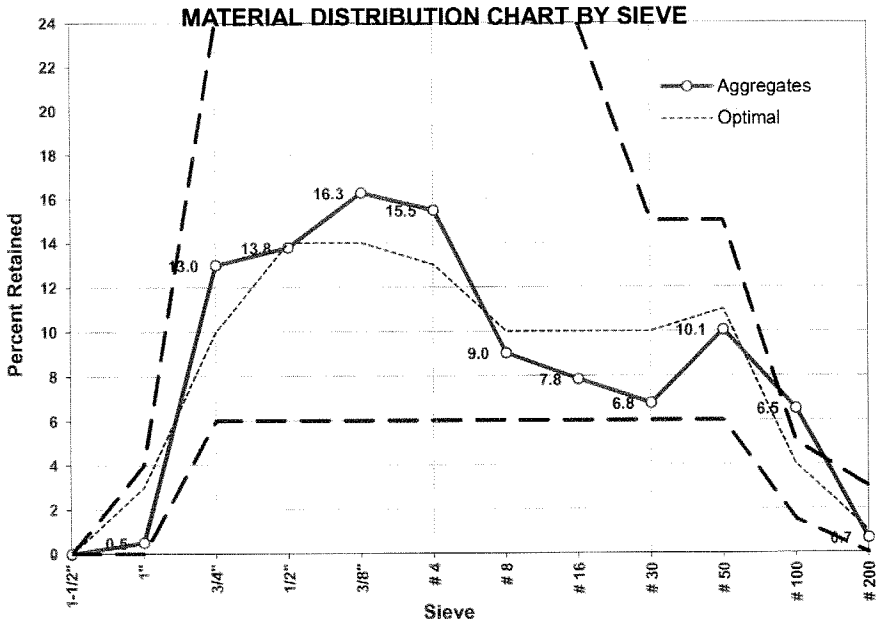

MATERIALS DISTRIBUTION

	% Retained Each Seive												
	#57	#8	Stone 3	Sand	Sand 2	Aggr	Mix	#57	#8	Stone 3	Sand	Sand 2	Aggr
1-1/2"	-	-	100.0	-	100.0	-	-	-	-	100.0	-	100.0	-
1"	0.9	-	-	-	-	0.5	0.4	0.9	-	-	-	-	0.5
3/4"	23.1	-	-	-	-	13.0	9.3	24.0	-	-	-	-	13.5
1/2"	24.5	-	-	-	-	13.8	9.9	48.5	-	-	-	-	27.3
3/8"	27.1	11.1	-	-	-	16.3	11.7	75.6	11.1	-	-	-	43.5
# 4	15.4	65.0	-	2.6	-	15.5	11.1	91.0	76.1	-	2.6	-	59.0
# 8	6.3	21.0	-	10.3	-	9.0	6.5	97.3	97.1	-	12.9	-	68.0
# 16	2.7	1.7	-	17.8	-	7.8	5.6	100.0	98.8	-	30.7	-	75.9
# 30	-	1.2	-	19.2	-	6.8	4.9	100.0	100.0	-	49.9	-	82.6
# 50	-	-	-	29.0	-	10.1	7.2	100.0	100.0	-	78.9	-	92.7
# 100	-	-	-	18.8	-	6.5	4.7	100.0	100.0	-	97.7	-	99.2
# 200	-	-	-	1.9	-	0.7	0.5						
# 325	-	-	-	0.4	-	0.1	0.1						
Liquid	-	-	-	-	-	-	-	Finess Modulus					
	100.0	100.0	100.0	100.0	100.0	100.0	71.9	6.88	5.83	-	2.73	1.00	5.34

MATERIAL DISTRIBUTION CHART BY SIEVE

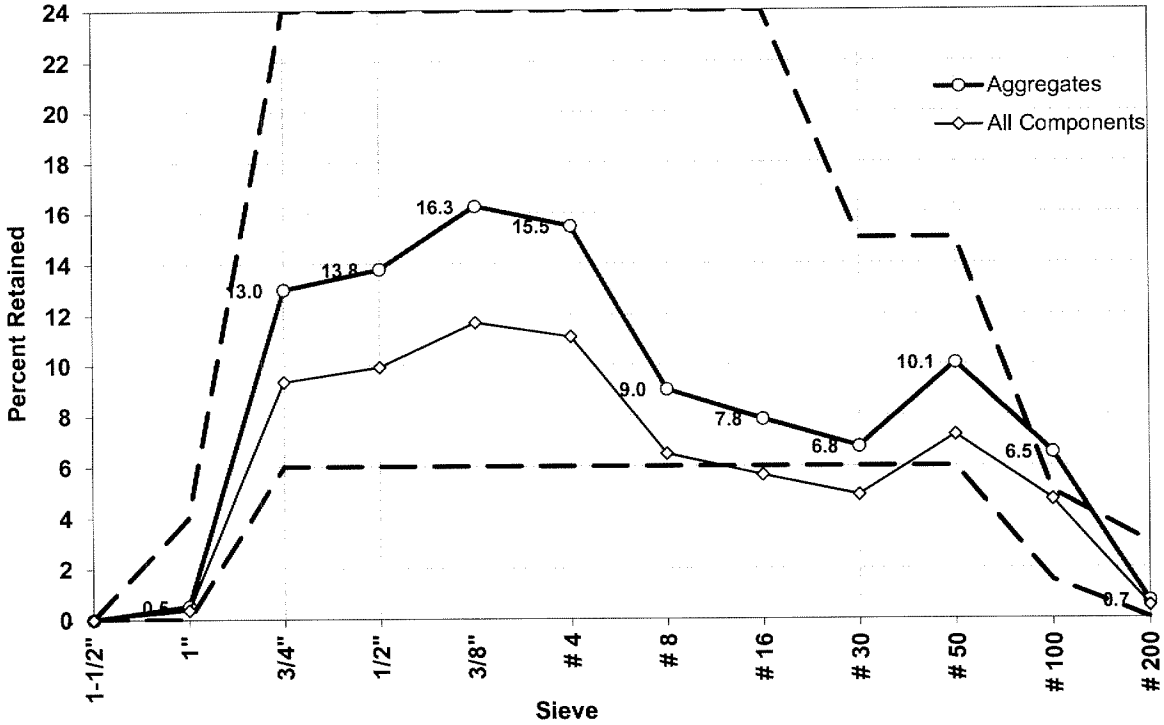

POWER 45 GRADATION CHART

0.45 GRADATION CHART

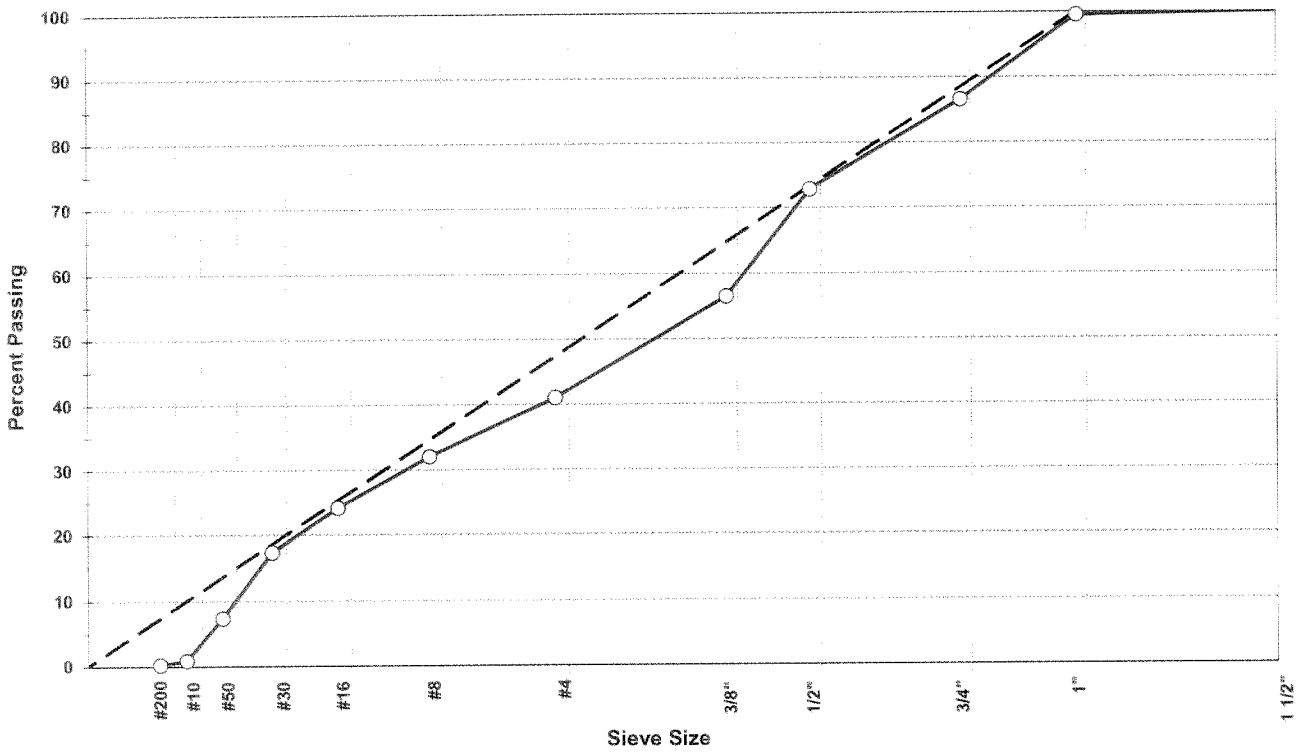

FULL GRADATION ANALYSIS

	% Passing						Comb % Passing		Comb	ASTM C33	
	#57	#8	Stone 3	Sand	Sand 2	Paste	Mix	Aggr's	Fines	Sand Gradations	
1-1/2"	100.0	100.0	-	100.0	-	100.0	100.0	100.0		-	-
1"	99.1	100.0	-	100.0	-	100.0	99.6	99.5		-	-
3/4"	76.0	100.0	-	100.0	-	100.0	90.3	86.5		-	-
1/2"	51.5	100.0	-	100.0	-	100.0	80.4	72.7		-	-
3/8"	24.4	88.9	-	100.0	-	100.0	68.7	56.5	100.0	100	100
# 4	9.0	23.9	-	97.4	-	100.0	57.6	41.0	97.4	95	100
# 8	2.7	2.9	-	87.1	-	100.0	51.1	32.0	87.1	80	100
# 16	-	1.2	-	69.3	-	100.0	45.5	24.1	69.3	50	85
# 30	-	-	-	50.1	-	100.0	40.6	17.4	50.1	25	60
# 50	-	-	-	21.1	-	100.0	33.4	7.3	21.1	10	30
# 100	-	-	-	2.3	-	100.0	28.7	0.8	2.3	2	10
# 200	-	-	-	0.4	-	100.0	28.2	0.1	0.4	-	-
# 325	-	-	-	-	-	92.5	26.0	-			
Liquid	-	-	-	-	-	35.6	10.0	-			

SAND GRAD ASTM C33 MITS

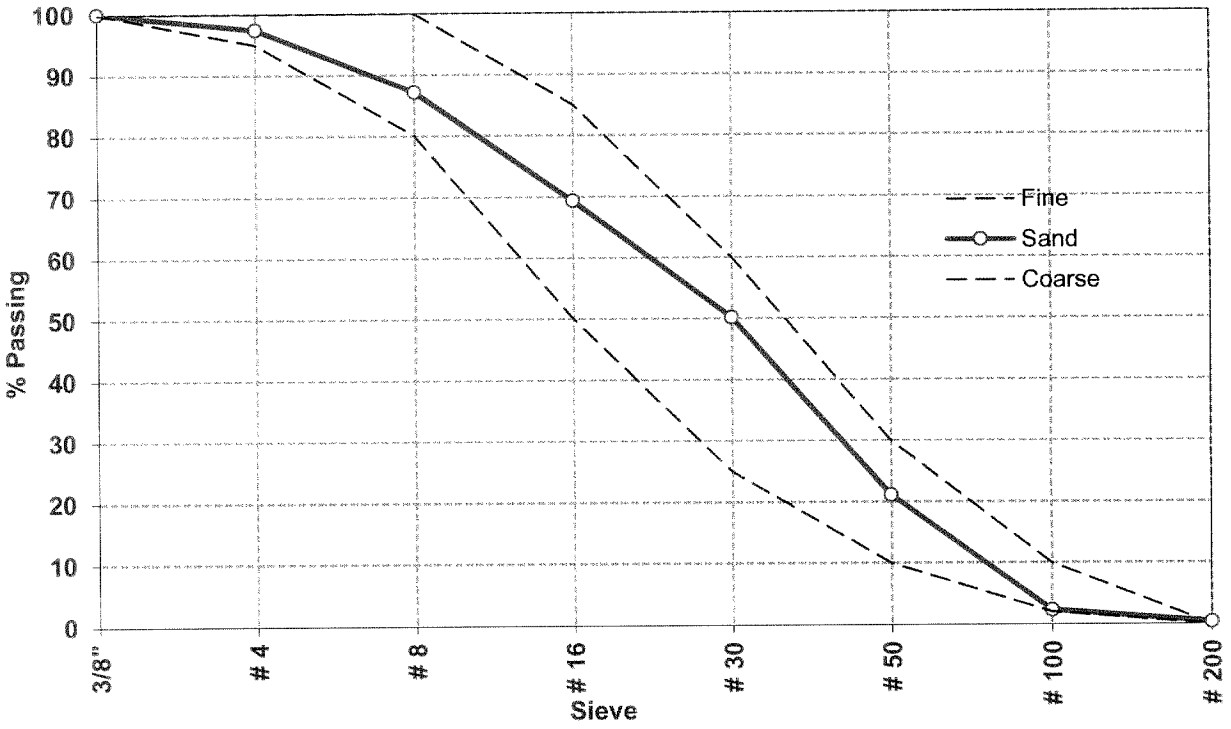

WELL # 6

New Jersey Department of Environmental Protection
Bureau of Water Allocation

WELL RECORD

Well Permit Number
3600032126

Atlas Sheet Coordinates
3613187

PENN JERSEY
PO BOX 616
Egg Harbor Twp State New Jersey Zip Code 08234

WELL LOCATION ADDRESS FIRE ROAD
County Atlantic Municipality Egg Harbor Twp
Owner's Well No.
Lot No 11 Block No 2101

WELL USE Industrial

DATE WELL STARTED 3-1-08
DATE WELL COMPLETED 3-1-08

WELL CONSTRUCTION

Total Depth Drilled 130 ft.
Finished Well Depth 130 ft.
Borehole Diameter
Top 10 in.
Bottom 10 in.
Well Casing Begins:
1 ft. above grade or
ft. below grade

Note: Measure all depths from land surface	Depth to Top (ft.)	Depth to Bottom (ft.)	Diameter (inches)	Material	Wgt./Rating (lbs/sch no.)
Single/Inner Casing	1	110	5	pvc	sch40
Middle Casing (for triple cased wells only)					
Outer Casing (largest diameter)					
Open Hole or Screen (No Used)	110	130	5	pvc	20slot
Blank Casings (No Used)					
Tail Piece					
Gravel Pack	105	130		morie#1	
Grout	0	105		Neat Cement	lbs
				Bentonite	600 lbs

Grouting Method tremie pipe
Drilling Method mud rotary

RECORD OF TEST

Test Date 3-1-08
Static Water Level 17 ft. below land surface
Water Level Measured Using tape
Pumping Water Level ft. below land surface
Well Was Pumped Using air lift
Well Yield gpm
If Pump Tested Discharge Rate gpm
Duration of Test hours

PERMANENT PUMPING EQUIPMENT

Installed by Dennis Pruchnicki Reg. No. M 1140
Pump Type sub
Depth of Pump below land surface 63 ft.
Capacity 65 gpm Horsepower 5

I certify that I have constructed the above referenced well in accordance with all well permit requirements and applicable State rules and regulations

Drilling Company ABSECON ELECTRIC MOTOR WORKS
Well Driller (Print) Dennis Pruchnicki
Driller's Signature Dennis Pruchnicki
Registration No M1140 Date 4-25-08

GEOLOGIC LOG

Note each depth where water was encountered in consolidated formations

0-3 rubble
3-18 med orange sand
18-21 clay
21-65 med white sand
65-80 med & coarse white sand
80-100 med & coarse lt. yellow sand
100-120 med & coarse tan sand
120-130 coarse & med tan sand

AS-BUILT WELL LOCATION
(NAD 83 HORIZONTAL DATUM)

NJ STATE PLANE COORDINATE IN US SURVEY FEET

NORTHING: EASTING:

OR

LATITUDE: " LONGITUDE: "

ORIGINAL: DEP *COPIES: DRILLER* *OWNER* *HEALTH DEPARTMENT*

APPENDIX I

P-501MR Material Testing

Slump (ASTM C143), Unit Weight (ASTM C138), Air Content (ASTM C173 & C231), Temperature (ASTM C1064)

National Airport Pavement Test Facility William J. Hughes Technical Center
Atlantic City International Airport
New Jersey 08405

Project: TO 15 RC Outdoor Phase 1 **Section:** 900psi flex from PennJersey 12/4/18 **Client:** FAA-ATRD

Technician: Matthew Willson/Carlos Rosado **Professional Engineer:** Matthew Brynick **Date:** 12/4/2018

Sample No.	Date Poured	Time	Air Temperature, °F	Concrete Temperature, °F	Slump, in	Aggregate Correction Factor, %	Pressure Air Content, %	Unit Weight, lb/ft^3	Number of Cylinders
Truck 1 1+20 to 1+52.5	12/4/2018	8:51am	46.0	66	3.0		5.40	146.6	5 beams, 1-6x12, 2-4x8
Truck 2 0+87.5 to 1+20	12/4/2018	9:28am	46.0	64	4.5		6.10	145.0	5 beams, 1-6x12, 2-4x8
Truck 3 0+55 to 0+87.5	12/4/2018	9:52am	47.0	66	4.75		5.50	145.8	5 beams, 1-6x12, 2-4x8
Truck 4 0+22.5 to 0+55	12/4/2018	10:12am	52.0	63	4.5		5.40	145.8	5 beams, 1-6x12, 2-4x8
Truck 5 0+7.5 to 0+22.5	12/4/2018	11:00am	52.0	66					2 beams, 1-6x12, 1-4x8
Truck 6 0+02.5 to 0+07.5	12/4/2018	11:15am	53.0	68					2 beams, 1-6x12, 1-4x8

Remarks: Slump, Temperature, Air Content within 5 minutes of obtaining sample by Joe Landy (Craig Testing)
Beams/Cylinders made within 15 minutes (Carlos Rosado and Matthew Willson)

Revised: 11/10/2018

FIELD TEST RESULTS

Portable Seismic Pavement Analyzer (PSPA)

Project: RC Outdoor Phase I
Date: 01/03/2019
Technician: Jason Alcoba
Layer Material: P-501MR
Lift Number: 1
Layer Density (pcf): 150
Poisson's Ratio: 0.18
Number of Receivers: 2

Source-near Receiver Spacing (in): 4
Near-far Receiver Spacing (in): 4
Ground Temperature (°F): 38-42
Ambient Temperature (°F): 48-50
Are wave-shapes reasonable? Yes
Are reduced (dispersion) curves close? Yes
Calibration performed according to SOP? Yes

Test Results			
Station	**Offset, ft**	**Average Temperature, F**	**Average Modulus, ksi**
0+07.5	0	39.0	4770.0
0+17.5	0	39.0	4658.6
0+27.5	0	39.0	4227.8
0+37.5	0	39.0	4791.7
0+47.5	0	39.0	5546.7
0+57.5	0	38.8	4805.0
0+97.5	0	41.6	5358.0
1+07.5	0	41.0	5502.3
1+17.5	0	39.0	5158.3
1+27.5	0	39.0	4745.7
1+37.5	0	38.8	4809.0
1+47.5	0	38.6	4787.0

Additional Comments: *Avg. Modulus: 4930 ksi*

Reviewed By:

Date:

Summary of RC Outdoor Phase I Heavy Weight Deflectometer (HWD) Data

HWD Testing

- Seating Load: 12,000 lb.
- Three-drop loading sequence used: 5,000 lb.; 8,000 lb.; and 12,000 lb.

HWD Testing Layout

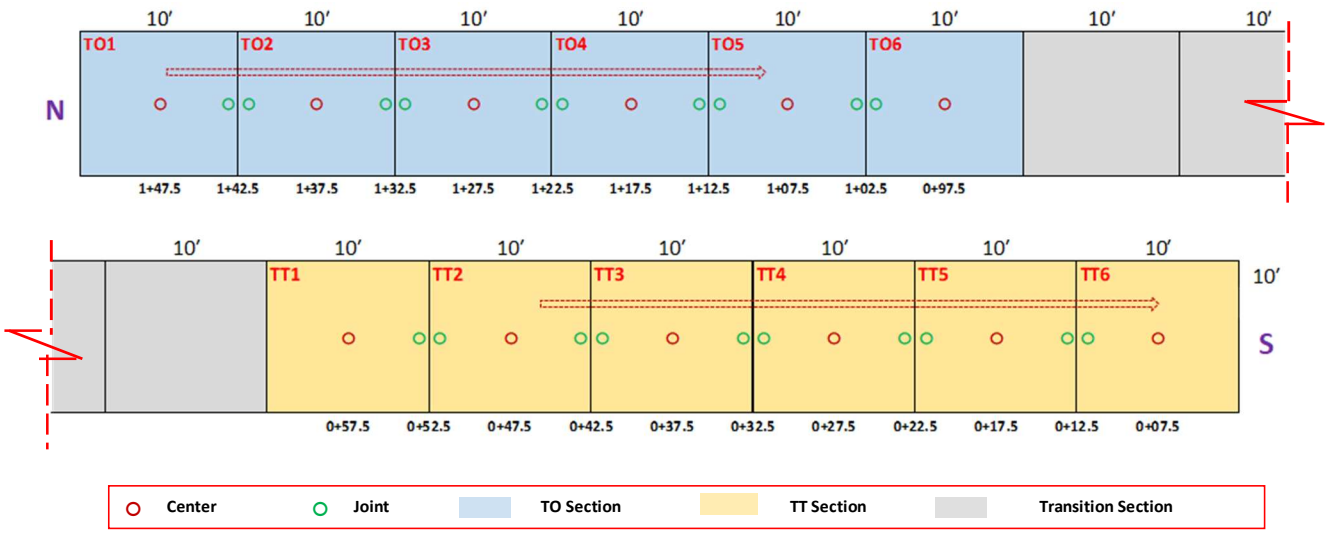

ASTM D4694 - Heavy Weight Deflectometer (HWD)

Project: RC Outdoor Phase I
Date: 01/03/2019
Technician: Henry Fermin

Material: P-501MR
Air Temperature (°F): 48-50
Pavement Temperature (°F): 45-49

Backcalulated Modulus									
Slab ID	Test Location	Location Code	Load (lbf)	Layer 1 [P-501MR] (in.)	Modulus 1 [P-501MR] (psi)	Layer 2 [P-154MR] (in.)	Modulus 2 [P-154MR] (psi)	Layer 3 [P-152MR] (in.)	Modulus 3 [P-152MR] (psi)
TO1	1+47.5	1	N/A*	9.0	N/A*	8.3	N/A*	0.0	N/A*
TO2	1+37.5	4	12,137	9.0	5,097,558	8.3	43,952	0.0	31,838
TO3	1+27.5	7	12,120	9.0	5,214,754	8.3	56,113	0.0	35,353
TO4	1+17.5	10	12,127	9.0	5,174,905	8.3	50,723	0.0	35,568
TO5	1+07.5	13	12,149	9.0	5,190,023	8.3	48,785	0.0	33,935
TO6	0+97.5	16	12,173	9.0	5,527,720	8.3	37,200	0.0	31,957
TT1	0+57.5	17	12,067	9.0	5,161,085	8.3	33,655	0.0	31,526
TT2	0+47.5	20	12,224	9.0	5,407,671	8.3	38,058	0.0	32,071
TT3	0+37.5	23	12,066	9.0	5,944,352	8.3	50,629	0.0	36,667
TT4	0+27.5	26	12,151	9.0	4,745,058	8.3	30,258	0.0	33,811
TT5	0+17.5	29	12,180	9.0	4,455,877	8.3	33,072	0.0	34,658
TT6	0+07.5	32	12,067	9.0	3,815,956	8.3	27,525	0.0	33,587

**Space limitations for the HWD vehicle*

Additional Comments: Seed Modulus in BAKFAA for P-501MR: 4,930,000 psi; P-154MR: 23,700 psi; P-152MR: 18,900 psi
Poisson's Ratio for P-501MR: 0.18; P-154MR: 0.35; and P-152MR: 0.40
Iteration Tolerance: 0.001
Average Backcalculated Modulus for P-501MR: 5,066,814 psi; P-154MR: 40,906 psi; and P-152MR: 33,725 psi

ASTM D4694 - Heavy Weight Deflectometer (HWD)

Project: RC Outdoor Phase I
Date: 01/03/2019
Technician: Henry Fermin

Material: P-501MR
Air Temperature (°F): 48-50
Pavement Temperature (°F): 45-49

Joint Evaluation: Load Transfer Efficiency (LTE) and kj															
Joint ID	Test Location	Location Code	D0	D1	D2	D3	D4	D5	D6	D7	LTE (%)		k_j		
			0	-12	12	24	36	48	60	72	Approach	Departure	Def_j	i	kj
TO12	1+42.5N	2	5.7	5.1	5.1	4.2	3.4	2.7	2.1	1.6	89.4	92.3	5.53	1.07	133,698
	1+42.5S	3	5.6	4.8	5.2	4.2	3.4	2.7	2.1	1.6					
TO23	1+32.5N	5	4.8	4.3	4.3	3.6	2.9	2.3	1.8	1.4	89.1	91.3	4.71	1.07	134,355
	1+32.5S	6	4.8	4.2	4.4	3.6	2.9	2.3	1.8	1.4					
TO34	1+22.5N	8	4.6	4.2	4.2	3.5	2.8	2.2	1.8	1.4	90.0	91.9	4.58	1.07	148,106
	1+22.5S	9	4.7	4.1	4.3	3.5	2.8	2.3	1.8	1.4					
TO45	1+12.5N	11	4.6	4.2	4.1	3.5	2.8	2.3	1.8	1.4	91.3	91.8	4.57	1.07	147,942
	1+12.5S	12	4.7	4.1	4.3	3.5	2.8	2.3	1.8	1.4					
TO56	1+02.5N	14	5.0	4.5	4.5	3.8	3.1	2.5	2.0	1.6	90.8	93.3	4.92	1.07	168,994
	1+02.5S	15	5.0	4.4	4.6	3.8	3.1	2.5	2.0	1.6					
TT12	0+52.5N	18	5.2	4.7	4.7	3.9	3.2	2.5	2.0	1.6	90.5	93.4	5.16	1.07	164,829
	0+52.5S	19	5.2	4.5	4.8	4.0	3.2	2.6	2.0	1.7					
TT23	0+42.5N	21	4.7	4.2	4.2	3.5	2.9	2.3	1.8	1.5	89.3	93.8	4.53	1.06	197,986
	0+42.5S	22	4.5	3.9	4.3	3.5	2.8	2.3	1.8	1.5					
TT34	0+32.5N	24	4.7	4.3	4.2	3.5	2.8	2.3	1.8	1.5	91.5	91.9	4.72	1.07	142,055
	0+32.5S	25	4.8	4.3	4.4	3.6	2.9	2.3	1.9	1.5					
TT45	0+22.5N	27	5.2	4.7	4.6	3.8	3.1	2.4	1.9	1.5	89.8	93.6	5.13	1.07	175,399
	0+22.5S	28	5.1	4.5	4.8	3.9	3.1	2.4	1.9	1.5					
TT56	0+12.5N	30	5.2	4.6	4.5	3.7	3.0	2.4	1.9	1.5	89.9	90.7	5.03	1.07	119,905
	0+12.5S	31	5.2	4.5	4.7	3.8	3.0	2.4	1.8	1.5					

LABORATORY TEST RESULTS

Flexural Strength of Concrete Beam (Third-Point Loading)
ASTM C78

National Airport Pavement Test Facility William J. Hughes Technical Center
Atlantic City International Airport
New Jersey 08405

Project: Reflective Cracking Outdoor Phase 1 **Material:** P-501MR from Penn Jersey 900Flex **Client:** FAA - ATRD
Technician: Matthew Willson **Professional Engineer:** Matthew Brynick **Date:** 12/18/2018

Sample No.	Date of Pour	Date Tested	Age (day)	Sta.	Offset	Depth 1 (in)	Depth 2 (in)	Depth 3 (in)	Width 1 (in)	Width 2 (in)	Width 3 (in)	Span Length (in)	Load (lb)	Modulus of Rupture (psi)	FFRC (ksi)	Weight (lb)	Total Length (in)
T1A	12/4/2018	12/18/2018	14	Truck 1	NA	6.10	6.05	6.00	6.05	6.05	6.05	18	6,327	514	5,504	64.64	21
T2A	12/4/2018	12/18/2018	14	Truck 2	NA	6.00	6.05	6.05	5.95	5.90	5.95	18	6,662	555	5,419	63.64	21
T3A	12/4/2018	12/18/2018	14	Truck 3	NA	6.00	6.05	6.05	6.05	6.00	6.05	18	7,569	620	5,637	64.48	21
T4A	12/4/2018	12/18/2018	14	Truck 4	NA	6.05	6.05	6.00	6.00	6.00	6.05	18	7,341	603	5,644	64.56	21

Remarks: Measurements to nearest 0.05 in or 1 mm. Modulus of Rupture = [(Load*Span)/(Avg width*Avg depth^2)]
Field cured beams

Revised: 8/7/2018

Flexural Strength of Concrete Beam (Third-Point Loading)
ASTM C78

National Airport Pavement Test Facility
William J. Hughes Technical Center
Atlantic City International Airport
New Jersey 08405

Project: DO #15 Outdoor Reflective Cracking **Section:** Outdoor P501 **Client:** FAA-ATRD
Technician: Matthew Wilson **Professional Engineer:** Mohammad Bazzaz, Ph.D. **Date:** 1/2/2019

Sample No.	Date of Pour	Date Tested	Age (day)	Sta.	Curing	Depth 1 (in)	Depth 2 (in)	Depth 3 (in)	Width 1 (in)	Width 2 (in)	Width 3 (in)	Span Length (in)	Load (lb)	Modulus of Rupture (psi)	FFRC (ksi)	Weight (lb)	Total Length (in)
T1-S1	12/4/2018	1/2/2019	29	RC	Lab	6.05	6.00	6.00	5.95	6.00	6.00	18	9612	799	5829	63.30	21
T1-S2	12/4/2018	1/2/2019	29	RC	Lab	6.00	6.05	6.05	5.95	5.90	5.95	18	9065	755	5654	63.00	21
T2-S3	12/4/2018	1/2/2019	29	RC	Lab	6.00	6.00	6.00	6.00	6.00	6.00	18	9480	790	5744	63.44	21
T2-S4	12/4/2018	1/2/2019	29	RC	Lab	6.10	6.05	6.00	5.95	5.95	6.00	18	9151	754	5885	63.90	21
T3-S5	12/4/2018	1/2/2019	29	RC	Lab	6.00	6.05	6.05	6.05	6.05	6.00	18	9371	768	5754	64.12	21
T3-S6	12/4/2018	1/2/2019	29	RC	Lab	6.05	6.05	6.00	5.95	5.95	6.05	18	8894	735	5735	63.90	21
T4-S7	12/4/2018	1/2/2019	29	RC	Lab	6.05	6.05	6.00	6.05	6.05	6.05	18	8299	678	5776	64.36	21
T4-S8	12/4/2018	1/2/2019	29	RC	Lab	6.00	6.05	6.05	6.05	5.95	5.95	18	9211	761	5729	63.84	21
T5-S9	12/4/2018	1/2/2019	29	RC	Lab	6.00	6.00	6.05	6.00	6.00	6.00	18	8268	685	5301	62.26	21
T5-S10	12/4/2018	1/2/2019	29	RC	Lab	6.10	6.10	6.00	6.00	6.00	6.05	18	8175	665	5340	62.72	21
T6-S11	12/4/2018	1/2/2019	29	RC	Lab	6.00	6.00	6.00	6.00	6.00	6.00	18	8781	732	5781	64.42	21
T6-S12	12/4/2018	1/2/2019	29	RC	Lab	6.05	6.00	6.00	6.05	6.00	6.05	18	9152	754	5817	64.82	21
T1	12/4/2018	1/2/2019	29	RC	Field	6.05	6.05	6.05	5.95	5.90	5.90	18	7575	630	5475	64.30	21
T2	12/4/2018	1/2/2019	29	RC	Field	6.00	6.00	6.05	6.05	6.05	6.00	18	8848	729	5527	63.22	21
T3	12/4/2018	1/2/2019	29	RC	Field	6.10	6.05	6.00	6.10	6.00	6.05	18	7263	590	5842	65.10	21
T4	12/4/2018	1/2/2019	29	RC	Field	6.05	6.00	6.00	6.05	6.05	6.00	18	8293	683	5754	64.12	21

Remarks: Measurements to nearest 0.05 in or 1 mm. Modulus of Rupture = [(Load*Span)/(Avg width*Avg depth^2)]

Revised: 01/02/2019

Coefficient of Thermal Expansion Report (AASHTO T-336)

Project:	RC Outdoor Phase I
Material:	P-501MR
Date:	1/3/2019 and 1/7/2019
Laboratory:	FAA NextGen Laboratory
Technician:	Matt Wilson
Analyzed by:	Tirupan Mandal

P-501MR Mix Proportions and Aggregate Type		
Material	Description	Quantity (lb/cy)
Cement	Lafarge Type I	529
Pozzolan	STI ProAsh Type F	176
Fine Aggregate	Tuckahoe Sand and Gravel Inc.	910
Coarse Aggregate	Berks #57	1550
Coarse Aggregate	Berks #8	250
Water	Potable	315
Air		6%
W/C Ratio		0.45

Specimen Identification		Truck 1	Truck 2	Truck 3	Truck 4	Truck 5	Truck 6
Age of Specimen	days	30	30	30	34	34	34
Specimen D_0	mm	101.00	100.96	101.01	100.99	101.10	101.24
Specimen L_0	mm	177.09	178.21	177.52	176.50	177.44	177.90
Frame Serial No.		167631	167632	145793	145793	167632	167631
Frame Cf	mm/mm/°C	18.575E-6	19.247E-6	19.144E-6	19.144E-6	19.247E-6	18.575E-6
FCS Serial No.		111501B	111501B	1115015B	1115015B	111501B	111501B
FCS CTE	mm/mm/°C	9.300E-6	9.300E-6	9.300E-6	9.300E-6	9.300E-6	9.300E-6
Cf Calibration Date		9/24/2014	9/24/2014	9/25/2014	9/25/2014	9/24/2014	9/24/2014
Cf Verification Date		1/1/2000	1/1/2000	1/1/2000	1/1/2000	1/1/2000	1/1/2000
T_1	°C	49.92	49.92	49.92	49.95	49.95	49.95
T_2	°C	9.63	9.63	9.63	9.67	9.67	9.67
T_3	°C	49.91	49.91	49.91	49.70	49.70	49.70
$\Delta T_1 = T_2 - T_1$	°C	-40.28	-40.28	-40.28	-40.29	-40.29	-40.29
$\Delta T_2 = T_3 - T_2$	°C	40.27	40.27	40.27	40.03	40.03	40.03
L_1	mm	-0.05954	-0.03737	-0.21166	-0.22376	-0.04401	-0.06194
L_2	mm	0.00685	0.03407	-0.14060	-0.15145	0.02930	0.00279
L_3	mm	-0.06032	-0.03794	-0.21288	-0.22259	-0.04373	-0.06088
$\Delta L_{m1} = L_2 - L_1$	mm	0.06639	0.07144	0.07106	0.07231	0.07330	0.06474
$\Delta L_{m2} = L_3 - L_2$	mm	-0.06717	-0.07201	-0.07228	-0.07114	-0.07303	-0.06368
$\Delta L_{f1} = Cf * L_0 * \Delta T_1$	mm	-0.13251	-0.13816	-0.13690	-0.13614	-0.13759	-0.13314
$\Delta L_{f2} = Cf * L_0 * \Delta T_2$	mm	0.13248	0.13813	0.13687	0.13527	0.13672	0.13229
$\Delta L_{a1} = \Delta L_{m1} + \Delta L_{f1}$	mm	-0.06612	-0.06672	-0.06584	-0.06383	-0.06429	-0.06840
$\Delta L_{a2} = \Delta L_{m2} + \Delta L_{f2}$	mm	0.06531	0.06612	0.06459	0.06413	0.06369	0.06861
$CTE_1 = \Delta L_{a1}/L_0/\Delta T_1$	mm/mm/°C	9.269E-6	9.294E-6	9.207E-6	8.976E-6	8.993E-6	9.543E-6
$CTE_2 = \Delta L_{a2}/L_0/\Delta T_2$	mm/mm/°C	9.157E-6	9.213E-6	9.034E-6	9.076E-6	8.966E-6	9.634E-6

CTE_{avg}	**mm/mm/°C**	**9.213E-6**	**9.254E-6**	**9.120E-6**	**9.026E-6**	**8.980E-6**	**9.589E-6**
CTE_{avg}	**in/in/°F**	**5.118E-6**	**5.141E-6**	**5.067E-6**	**5.014E-6**	**4.989E-6**	**5.327E-6**

Comments:
Average CTE Value: 9.197E-6 mm/mm/°C or 5.109E-6 in/in/°F

Static Modulus of Elasticity & Poisson's Ratio of Concrete in Compression ASTM C469

National Airport Pavement Test Facility William J. Hughes Technical Center
Atlantic City International Airport
New Jersey 08405

Project:	TO 15 Reflective Cracking Outdoor Phase 1	**Section**	P-501MR from Penn Jersey 12/4/18
Technician:	Renee' Norcross/Carlos Rosado	**Client:**	FAA ATRD
Prof. Engineer:	Mohammad Bazzaz, PhD	**Date:**	2/7/2019

Sample :	T1/S1	T2/S2	T3/S3	T4/S4	T5/S5	T6/S6	
Ultimate Load (lbs)	21250	21250	21250	21250	21250	21250	
40%	8500	8500	8500	8500	8500	8500	
Modulus (psi)							
C469	6562933	5391430	5076020	5532847	5149256	5074407	
Poisson's Ratio							
C469	0.175	0.186	0.288	0.234	0.181	0.198	

Loading Rate is 35 ± 7 psi/sec.
Loading Rate on a 6" dia cylinder is between approximately 800 lbf/sec and 1100 lbf/sec
Load specimen until 40% of average ultimate load is reached

Revised: 2/7/2019

Compressive Strength of Concrete Cylinders
ASTM C39

National Airport Pavement Test Facility William J. Hughes Technical Center
Atlantic City International Airport
New Jersey 08405

Project: TO 15 Outdoor Reflective Cracking
Section: Outdoor Reflective Cracking Phase I
Client: FAA-ATRD
Technician: Matt Willson
Professional Engineer: Mohammad Bazzaz, PhD
Date: 2/11/2019

Sample No.	Date Poured	Date Tested	Age (days)	Sta./Lane/ Slab	FFRC (ksi)	Weight (lbs)	Diameter (in)	Length (in)	Area (in^2)	Density (lb/ft^3)	Load (lbs)	Compressive Strength (psi)	Length/Diameter	Correction factor	Corrected Compressive Strength (psi)	Type of Fracture
T1-S1	12/4/2018	2/11/2019	69	ORC	NA	28.64	6.03	12.01	28.56	144.29	180000	6300	1.99	1.00	6300	3
T2-S2	12/4/2018	2/11/2019	69	ORC	5776	28.50	5.96	12.00	27.90	147.10	192090	6890	2.01	1.00	6890	3
T3-S3	12/4/2018	2/11/2019	69	ORC	5935	28.64	6.00	12.03	28.27	145.50	192360	6800	2.01	1.00	6800	3
T4-S4	12/4/2018	2/11/2019	69	ORC	5908	28.50	5.96	12.04	27.90	146.62	194410	6970	2.02	1.00	6970	3
T5-S5	12/4/2018	2/11/2019	69	ORC	5505	28.14	6.00	12.05	28.27	142.72	162720	5760	2.01	1.00	5760	3
T6-S6	12/4/2018	2/11/2019	69	ORC	6125	29.04	6.01	12.02	28.37	147.16	162030	5710	2.00	1.00	5710	3

Remarks: ASTM C1231/ASTM C617 capping standards was used

Length/Diameter ratio greater than 1.75 doesnot require any correction factor

Revised: 02/12/2019

APPENDIX J

P-209MR Shoulder Testing

FIELD TEST RESULTS

CRAIG TESTING LABORATORIES, INC.
5439 Harding Highway • P.O. Box 427 • Mays Landing, NJ 08330-0427 • (609) 625-1700 • FAX (609) 625-1798

CLIENT: AE Stone, Inc. PROJECT NO.: 915015-1

PROJECT: Reflective Cracking Project REPORT NO.: FD-2
Wm. J. Hughes Technical Ctr, Atlantic City International Airport
Work Order No. 1812

INSPECTED BY: Robert D. Barrett DATE INSPECTED: 4/5/19

GEOTECHNICAL REPORT BY: N/A DATED: N/A

EARTHWORK FIELD INSPECTION REPORT

Item Inspected: Building Pad Slab Foundation Other: N/A
Utility Trench Sub-Grade **X** Pavement Sub-Base Compactor Model: Plate Tamper

	Location	Dry Density (pcf)	Percent Moisture	Proctor (pcf) 1557/698	Optimum Moisture (%)	Compaction Required (%)	Percent Compaction
1	Station: 0+01.5, Offset 6'	147.3	3.8	162.8	5.4	90.0	90.5%
2	Station: 0+58.5, Offset 1'	147.2	3.7	162.8	5.4	90.0	90.4%
3	Station: 1+27.5, Offset 1.5'	147.0	3.7	162.8	5.4	90.0	90.3%
4	Station: 1+53.5, Offset 7'	146.7	3.5	162.8	5.4	90.0	90.1%
5							
6							
7							
8							
9							
10							

Gauge Serial No.: 25029 Gauge Standard Counts: MS: 624 DS: 2035

Fill Placement: **X** Controlled ___ Uncontrolled **Loose Lift Thickness (in.):** 4"

Not Ready for inspection; Cancelled On-Site **Hours on Site:** 7:00 AM - 1:15 PM
Work Above is in Progress and Requires Further Inspection
X Work is in Substantial Compliance with: Project Specifications **X** Geotechnical Recommendations
Inspection done without approved documentation available
Work Deviates from Approved Documents, See NCR No. _____

Remarks: Dense Graded Aggregrate (P-209) Material was placed prior to CTL arrival. Water was sprayed on soil and compacted with a plate tamper after 20-30 mins had passed. Compaction was met and an Optimium Moisuture Range of +/- 2.0% was met.

Reported to: Reviewed By: I. Craig
Project Distribution

REV 2/25/11

CRAIG
TESTING LABORATORIES, INC.
5439 Harding Highway • P.O. Box 427 • Mays Landing, NJ 08330-0427 • (609) 625-1700 • FAX (609) 625-1798

CLIENT: AE Stone, Inc.

PROJECT NO.: 915015-1

PROJECT: Reflective Cracking Project
Wm. J. Hughes Technical Ctr, Atlantic City International Airport
Work Order No. 1812

REPORT NO.: AF-1

INSPECTED BY: Robert D. Barrett

DATE INSPECTED: 4/5/19

ASPHALT PLACEMENT FIELD INSPECTION REPORT

Course Inspected: **X** Surface ____ Intermediate ____ Leveling ____ Base

Marshall Value Provided (pcf) 157.0 Bulk (98% - 102%) 163.5 Rice / Maximum (93% - 97%)

	Location	Wet Density	Rice / Marshall	Percent Compaction
1	Station: 0+07.5, Offset 1'	152.0	163.5	93.0%
2	Station: 0+57.5, Offset 2'	151.0	163.5	92.4%
3	Station: 1+07.5, Offset 13'	153.1	163.5	93.6%
4	Station: 1+27.5, Offset 14'	148.0	163.5	90.5%
5				
6				
7				
8				
9				
10				

Truck No.																
Time																
Temp. (F)																

Remarks:

Equipment Used: Handtools, 1 Backhoe Loader, 1 Front End Loader, 1 Flat Plate Tamper. Only 1 Dump Truck carrying Asphalt was used. Light rain fell during the entire duration of the asphalt placement. 90% compaction of the Rice Value (163.5), was required for this application.

Gauge Serial No.: 25029 Gauge Standard Counts: MS: 624 DS: 2035

Hours on Site: 7:00 AM - 1:15 PM **Results Reported To:** Chris Brower - AE Stone, Inc.
(Name)

Core Correlation Performed: Yes **X** No (percent compaction results above are for reference purposes only)

Reported to:
Project Distribution

Reviewed By: I. Craig

REV 2/10

LABORATORY TEST RESULTS

AGGREGATES & SOILS TESTING CO.

PHYSICAL TESTING OF CRUSHED STONE AND SOILS
AASHTO ACCREDITED • AMRL INSPECTED

817 Magaro Road • Enola, PA 17025 • 717-412-0998 • www.aggregatesandsoilstesting.com

Mr. Keith Sterling
A. E. Stone, Inc.
1435 Doughty Road
Egg Harbor Twp, NJ 08234

AST# 22308-3
RECEIVED: March 4, 2019
TESTED: March 19, 2019
SUBMITTED BY CLIENT

SIEVE ANALYSIS & WASH LOSS - ASTM C 117, C 136
Dense Graded Aggregate P-209

SIEVE SIZE	MASS RETAINED	PERCENT RETAINED	PERCENT PASSING	P209 SPECS
2"	0.0	0.0	100.0	100
1.5"	0.0	0.0	100.0	95 - 100
1"	1322.2	8.7	91.3	70-95
3/4"	2195.1	14.4	77.0	55-85
1/2"	3252.0	21.3	55.7	
3/8"	1073.7	7.0	48.6	
#4	1166.9	7.6	41.0	30-60
#8	1129.4	7.4	33.6	
#16	1349.2	8.8	24.8	
#30	1029.0	6.7	18.0	
#40	493.6	3.2	14.8	10-30
< #40	2262.0	14.8		
< #200			3.4	0-8

SUBMITTED BY: Wesley Kamerer
Wesley T. Kamerer, Laboratory Manager

DATE: 3/19/19

AGGREGATES & SOILS TESTING CO.

PHYSICAL TESTING OF CRUSHED STONE AND SOILS
AASHTO ACCREDITED • AMRL INSPECTED

817 Magaro Road • Enola, PA 17025 • 717-412-0998 • www.aggregatesandsoilstesting.com

Mr. Keith Sterling
A. E. Stone, Inc.
1435 Doughty Road
Egg Harbor Twp, NJ 08234

AST# 22308-1
RECEIVED: March 4, 2019
TESTED: March 19, 2019
SUBMITTED BY CLIENT

SODIUM SULFATE SOUNDNESS - ASTM C 88
Dense Graded Aggregate P-209

SIZE FRACTION	MASS BEFORE	# OF PCS	MASS AFTER	# OF PCS	PERCENT LOSS	SAMPLE GRADING	CORRECTED LOSS
1.5" x 3/4"	1505.0	43	1503.6	43	0.1	0.392	0.0
3/4" x 3/8"	1002.3		999.9		0.2	0.479	0.1
3/8" x #4	300.4		297.5		1.0	0.129	0.1

TOTAL PERCENT LOSS 0.3

SUBMITTED BY: Wesley Kamerer
Wesley T. Kamerer, Laboratory Manager

DATE: 3/19/19

AGGREGATES & SOILS TESTING CO.

PHYSICAL TESTING OF CRUSHED STONE AND SOILS
AASHTO ACCREDITED • AMRL INSPECTED

817 Magaro Road • Enola, PA 17025 • 717-412-0998 • www.aggregatesandsoilstesting.com

Mr. Keith Sterling
A. E. Stone, Inc.
1435 Doughty Road
Egg Harbor Twp, NJ 08234

AST# 22308-2
RECEIVED: March 4, 2019
TESTED: March 19, 2019
SUBMITTED BY CLIENT

LOS ANGELES ABRASION - ASTM C 131
Dense Graded Aggregate P-209

SIZE FRACTION	MASS BEFORE	TOTAL MASS BEFORE	MASS AFTER (+ #12)	MASS LOSS	PERCENT LOSS
1.5" x 1"	1250.5	5004.0	4184.1	819.9	16.4
1" x 3/4"	1252.0				
3/4" x 1/2"	1251.1				
1/2" x 3/8"	1250.4				

SUBMITTED BY: Wesley Kamerer
Wesley T. Kamerer, Laboratory Manager

DATE: 3/19/19

AGGREGATES & SOILS TESTING CO.

PHYSICAL TESTING OF CRUSHED STONE AND SOILS
AASHTO ACCREDITED • AMRL INSPECTED

817 Magaro Road • Enola, PA 17025 • 717-412-0998 • www.aggregatesandsoilstesting.com

Mr. Keith Sterling
A. E. Stone, Inc.
1435 Doughty Road
Egg Harbor Twp, NJ 08234

AST# 22308-4
RECEIVED: March 4, 2019
TESTED: March 19, 2019
SUBMITTED BY CLIENT

FLAT &/or ELONGATED PARTICLES - ASTM D 4791 (A @ 5:1)
Dense Graded Aggregate P-209

SIZE FRACTION	MASS TESTED	MASS F & E	PERCENT F & E	SAMPLE GRADING	CORRECTED % F & E
1.5" x 1"	3619.4	0.0	0.0	0.147	0.0
1" x 3/4"	2511.5	0.0	0.0	0.244	0.0
3/4" x 1/2"	1138.4	0.0	0.0	0.361	0.0
1/2" x 3/8"	347.5	2.7	0.8	0.119	0.1
3/8" x #4	179.0	0.6	0.3	0.130	0.0

TOTAL PERCENT FLAT & ELONGATED @ 5:1	0.1

SUBMITTED BY: Wesley Kamerer
Wesley T. Kamerer, Laboratory Manager

DATE: 3/19/19

AGGREGATES & SOILS TESTING CO.

PHYSICAL TESTING OF CRUSHED STONE AND SOILS
AASHTO ACCREDITED • AMRL INSPECTED

817 Magaro Road • Enola, PA 17025 • 717-412-0998 • www.aggregatesandsoilstesting.com

Mr. Keith Sterling
A. E. Stone, Inc.
1435 Doughty Road
Egg Harbor Twp, NJ 08234

AST# 22308-5
RECEIVED: March 4, 2019
TESTED: March 19, 2019
SUBMITTED BY CLIENT

FRACTURED PARTICLES - ASTM D 5821
Dense Graded Aggregate P-209

≥ 2 Faces:	100.0
≥ 1 Face:	100.0

SUBMITTED BY: Wesley T. Kameyer
Wesley T. Kameyer, Laboratory Manager

DATE: 3/19/19

AGGREGATES & SOILS TESTING CO.

PHYSICAL TESTING OF CRUSHED STONE AND SOILS
AASHTO ACCREDITED • AMRL INSPECTED

817 Magaro Road • Enola, PA 17025 • 717-412-0998 • www.aggregatesandsoilstesting.com

Mr. Keith Sterling
A. E. Stone, Inc.
1435 Doughty Road
Egg Harbor Twp, NJ 08234

AST# 22308-6
RECEIVED: March 4, 2019
TESTED: March 19, 2019
SUBMITTED BY CLIENT

SAND EQUIVALENT - ASTM D 2419
Dense Graded Aggregate P-209

CLAY READING:	**4.3**
SAND READING:	**3.2**
SAND EQUIVALENT	**75**

SUBMITTED BY: Wesley Kamerer
Wesley T. Kamerer, Laboratory Manager

DATE: 3/19/19

AGGREGATES & SOILS TESTING CO.

PHYSICAL TESTING OF CRUSHED STONE AND SOILS
AASHTO ACCREDITED • AMRL INSPECTED

817 Magaro Road • Enola, PA 17025 • 717-412-0998 • www.aggregatesandsoilstesting.com

Mr. Keith Sterling
A. E. Stone, Inc.
1435 Doughty Road
Egg Harbor Twp, NJ 08234

AST# 22308-7
RECEIVED: March 4, 2019
TESTED: March 19, 2019
SUBMITTED BY CLIENT

SPECIFIC GRAVITY AND ABSORPTION - ASTM C 128
Dense Graded Aggregate P-209

ABSORPTION:	**0.21**
BULK DRY Sp Grv:	**3.042**
BULK SSD Sp Grv:	**3.048**
APPARENT Sp Grv:	**3.062**

SUBMITTED BY: Wesley T. Kamerer
Wesley T. Kamerer, Laboratory Manager

DATE: 3/19/19

AGGREGATES & SOILS TESTING CO.

PHYSICAL TESTING OF CRUSHED STONE AND SOILS
AASHTO ACCREDITED • AMRL INSPECTED

817 Magaro Road • Enola, PA 17025 • 717-412-0998 • www.aggregatesandsoilstesting.com

Mr. Keith Sterling
A. E. Stone, Inc.
1435 Doughty Road
Egg Harbor Twp, NJ 08234

AST# 22308-8
RECEIVED: March 4, 2019
TESTED: March 19, 2019
SUBMITTED BY CLIENT

MODIFIED PROCTOR - ASTM D 1557 (C)
Dense Graded Aggregate P-209

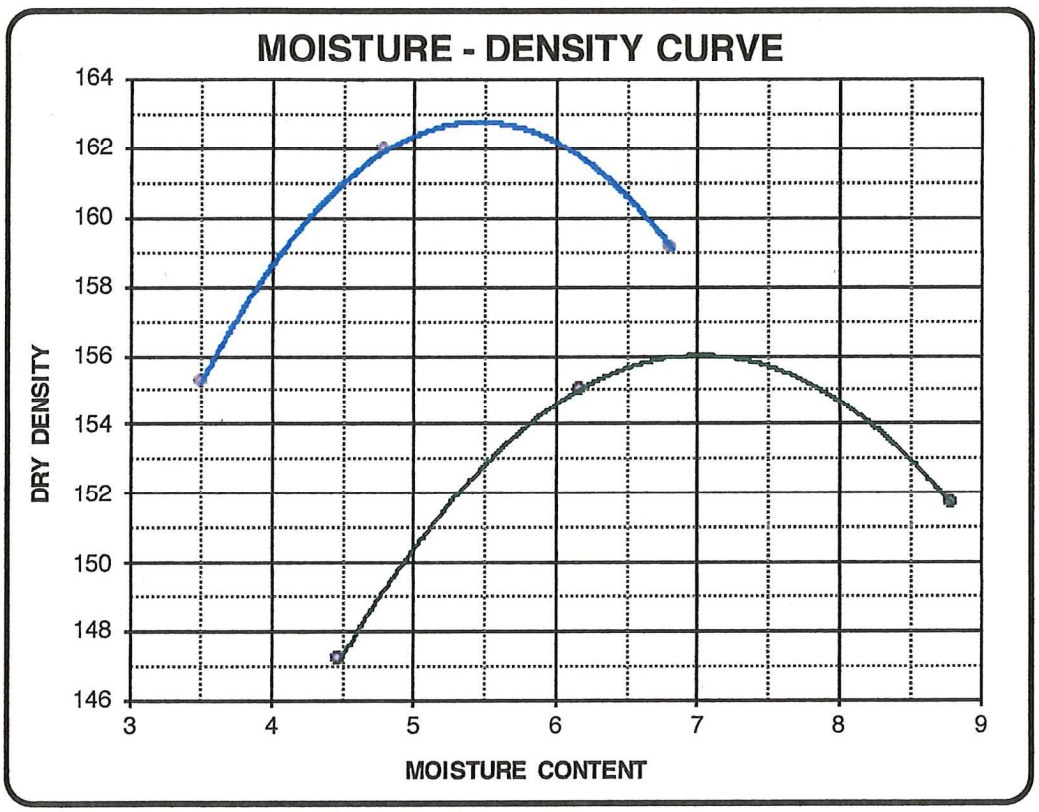

		Corrected Data (ASTM D 4718)
OVERSIZED MATERIAL REMOVED (+3/4"):	23.0	
OPTIMUM MOISTURE CONTENT (%):	**7.0**	**5.4**
MAXIMUM DRY DENSITY (lb/cuft):	**156.0**	**162.8**
MAXIMUM WET DENSITY (lb/cuft):	**166.9**	**171.6**

SUBMITTED BY: Wesley Kamerer
Wesley T. Kamerer, Laboratory Manager

DATE: 3/19/19

AGGREGATES & SOILS TESTING CO.

PHYSICAL TESTING OF CRUSHED STONE AND SOILS
AASHTO ACCREDITED • AMRL INSPECTED

817 Magaro Road • Enola, PA 17025 • 717-412-0998 • www.aggregatesandsoilstesting.com

Mr. Keith Sterling
A. E. Stone, Inc.
1435 Doughty Road
Egg Harbor Twp, NJ 08234

AST# 22308-9
RECEIVED: March 4, 2019
TESTED: March 19, 2019
SUBMITTED BY CLIENT

LIQUID / PLASTIC LIMITS OF SOIL - ASTM D 4318
Dense Graded Aggregate P-209

LIQUID LIMIT: < 20

PLASTIC LIMIT: non-plastic

PLASTICITY INDEX: non-plastic

SUBMITTED BY: Wesley Kamerer
Wesley T. Kamerer, Laboratory Manager

DATE: 3/19/19

APPENDIX K

P-401MR Mix Design

	NATIONAL AIRPORT PAVEMENT TEST FACILITY TRANSMITTAL OF SHOP DRAWINGS, EQUIPMENT DATA, MATERIAL SAMPLES, OR MANUFACTURER'S CERTIFICATES OF COMPLIANCE	**National Airport Pavement Test Facility** **William J. Hughes Technical Center** **Atlantic City International Airport** **New Jersey 08405**

Task Order:	Task Order 015		**Date Submitted:**	09/12/2018
Project Name:	Reflective Cracking (Outdoor Phase I)		**Specification No.:**	401MR-04
Transmittal Description:	P-401MR Job Mix Formula		**Source:**	
Transmittal Purpose:	FAA Approval		**Transmittal Type:**	Initial Submittal

Item No.:	Description:	Variation:	Contractor Recommendation:
1	P-401MR Job Mix Formula		A

Contractor Remarks:

1	
2	
3	
4	
5	
6	
7	
8	
9	
10	

Contractor Approval Actions:

Janine Abyad	09/12/2018
Contractor Name & Signature	***Date***

FAA Review Action Codes:

	X	"A" - Approved as Submitted; Completed
		"B" - Approved, except as noted on drawings; Completed
		"C" - Approved, resubmission required
		"D" - Returned by Correspondence; Completed
		"E" - Disapproved (see attached); Resubmit
		"F" - Receipt Acknowledged; Completed
		"G" - Other (Specify); Resubmit
		"X" - Receipt Acknowledged, does not comply; Resubmit

FAA Approval Actions:

Richard G Ji	11/13/2018
FAA Name & Signature	***Date***

Additional FAA Comments:

1	
2	
3	
4	
5	

Job Mix Formula Submittal

Company: AE Stone, Inc.

Mix Type: HMA PG64-22

Date Submitted: 9/12/2018

This document serves as the submission of the Job Mix Formula (JMF) for TO #15 – Outdoor Reflective Cracking Phase 1 and Indoor Reflective Cracking Phase 6 according to 401MR-04. This JMF was developed using procedures contained in the Asphalt Institute MS-2 Mix Design Manual, 7th Edition. Table 1 below shows the requirements of 401MR-04 and where to find the supporting documentation within this document. This JMF was previously submitted on December 12, 2016 and used for Phase V of the Indoor Reflective Cracking project. Aggregate sources have not changed and the properties have been updated with current values. (3) Verification plugs at the design asphalt content have been completed and are included in Appendix G.

Table 1. Summary of JMF Requirements

Requirement	Criteria	Comments
401MR-04(1) – Sieve Analysis	See Table 3	See Appendix A
401MR-04(2) – Percent of Asphalt	5.0% – 7.5%	See Appendix B
401MR-04(3) – Asphalt Performance Grade and Modifier Type	PG 64–22	See Appendix C
401MR-04(4) – Number of Gyrations	75 gyrations	75 gyrations
401MR-04(5) – Mixing Temperature	N/A	See Appendix D
401MR-04(6) – Compaction Temperature	N/A	See Appendix D
401MR-04(7) – Temperature–Viscosity Relationship of PG Binder with Acceptable Range of Mixing and Compaction Temperatures	N/A	See Appendix D
401MR-04(8) – 0.45 Power Gradation Curve	See Table 3	See Appendix A
401MR-04(9) – Plots of Air Voids, VMA and Unit Weight vs. Asphalt Content	See Table 4	See Appendix E
401MR-04(10) – Specific Gravity and Absorption for Each Aggregate	N/A	See Appendix F
401MR-04(11) – Percent Natural Sand	0% – 15%	0%
401MR-04(12) – Percent Fractured Faces	See Table 2	See Appendix F
401MR-04(13) – Percent by Weight of Flat Particles, Elongated Particles (and Criteria)	See Table 2	See Appendix F
401MR-04(14) – Date of JMF	30 Days before Paving	8/24/18
Verification of (3) Plugs @ Optimum Asphalt Content	3% < Air Voids < 4%	See Appendix G

Table 2. Coarse and Fine Aggregate Requirements

Coarse Aggregate Material Requirements (Portion retained on the No. 4 (4.75 mm) sieve)		
Material Test	**Requirement**	**Standard**
Resistance to Degradation	Loss: 40% maximum	ASTM C131
Soundness of Aggregates by Use of Sodium Sulfate **or** Magnesium Sulfate	Loss after 5 cycles: 10% maximum using Sodium sulfate - or - 13% maximum using magnesium sulfate	ASTM C88
Clay lumps and friable particles	0.3% maximum	ASTM C142
Percentage of Fractured Particles	Minimum 50% by weight of particles with at least two fractured faces and 65% with at least one fractured face	ASTM D5821
Flat, Elongated, or Flat and Elongated Particles	8% maximum, by weight, of flat, elongated, or flat and elongated particles at 5:1	ASTM D4791
Fine Aggregate Material Requirements (Portion retained on the No. 200 (75 µm))		
Liquid limit	25 maximum	ASTM D4318
Plasticity Index	6 maximum	ASTM D4318
Clay lumps and friable particles	0.3% maximum	ASTM C142
Sand equivalent	45 minimum	ASTM D2419
Natural Sand	0% to 15% maximum by weight of total aggregate	ASTM D1073

Table 3. Aggregate - HMA Pavements

Sieve Size	**Percentage by Weight Passing Sieve**
3/4 inch (19.0 mm)	100
1/2 inch (12.5 mm)	79 – 99
3/8 inch (9.5 mm)	68 – 88
No. 4 (4.75 mm)	48 – 68
No. 8 (2.36 mm)	33 – 53
No. 16 (1.18 mm)	20 – 40
No. 30 (600 µm)	14 – 30
No. 50 (300 µm)	9 – 21
No. 100 (150 µm)	6 – 16
No. 200 (75 µm)	3 – 6
Voids in Mineral Aggregate (VMA)	≥ 15
Asphalt Percent:	
Stone or gravel	5.0 – 7.5
Minimum Construction Lift Thickness	3 inch

Table 4. HMA Design Criteria

Test Property	Value	Test Method
Number of blows/gyrations	75	
Air voids (%)	3% – 4%	ASTM D3203
Percent voids in mineral aggregate (VMA), minimum	See Table 3	ASTM D6995
TSR	not less than 75 at a saturation of 70-80%[1]	ASTM D4867

[1] An anti-stripping agent shall be added to the asphalt mixture, as necessary.

If you have any questions about this submittal, please feel free to contact me at 609-641-2781 x 213 or email me at cbrower@aestone.com.

_____ _____

Chris Brower Date

Project Manager – AE Stone, Inc.

Appendix A – Sieve Analysis and 0.45 Power Gradation Curve

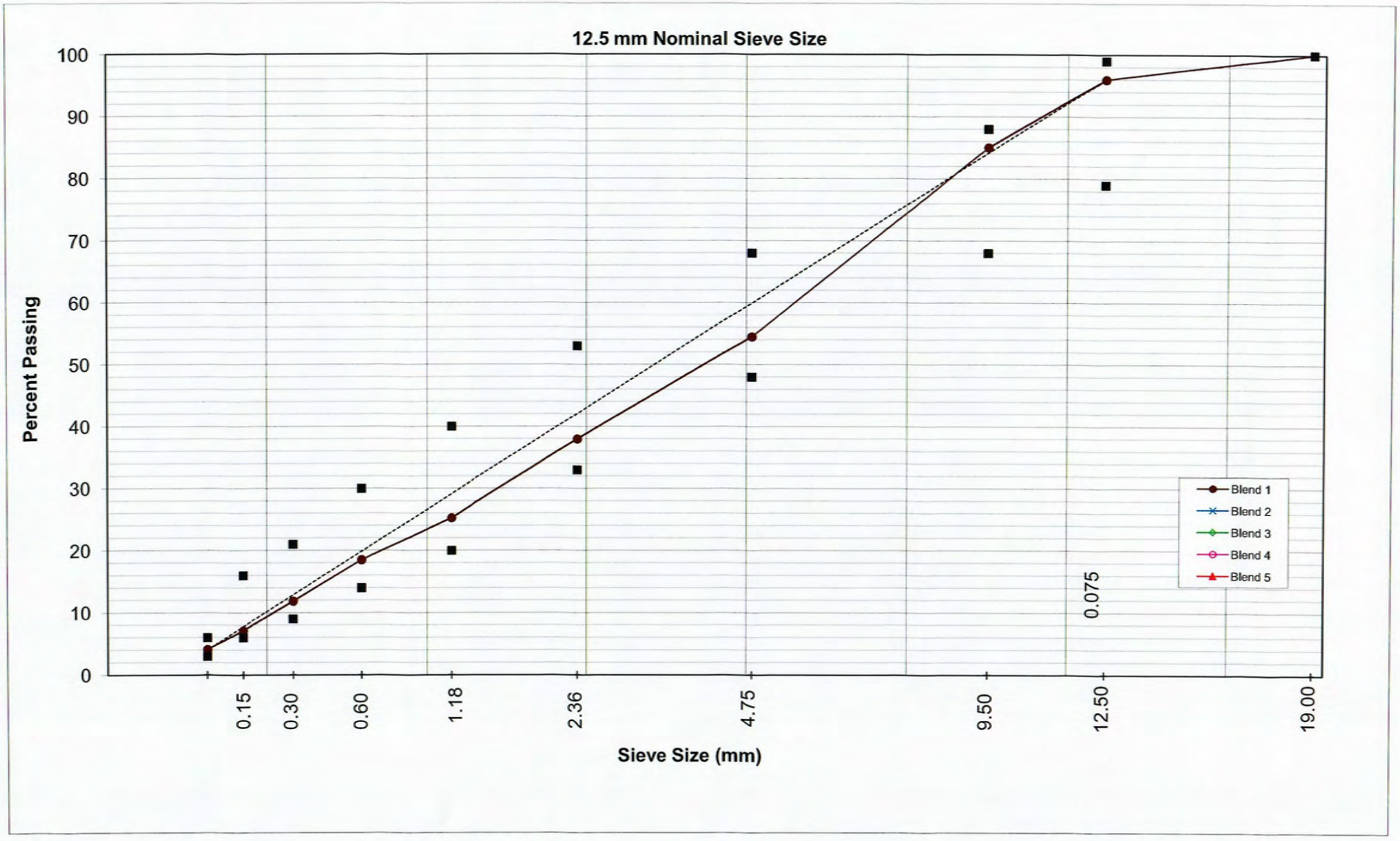
12.5 mm Nominal Sieve Size
Percent Passing
100
90
80
70
60
50
40
30
20
10
0
0.15
0.30
0.60
1.18
2.36
4.75
9.50
12.50
19.00
0.075
Sieve Size (mm)
Blend 1
Blend 2
Blend 3
Blend 4
Blend 5

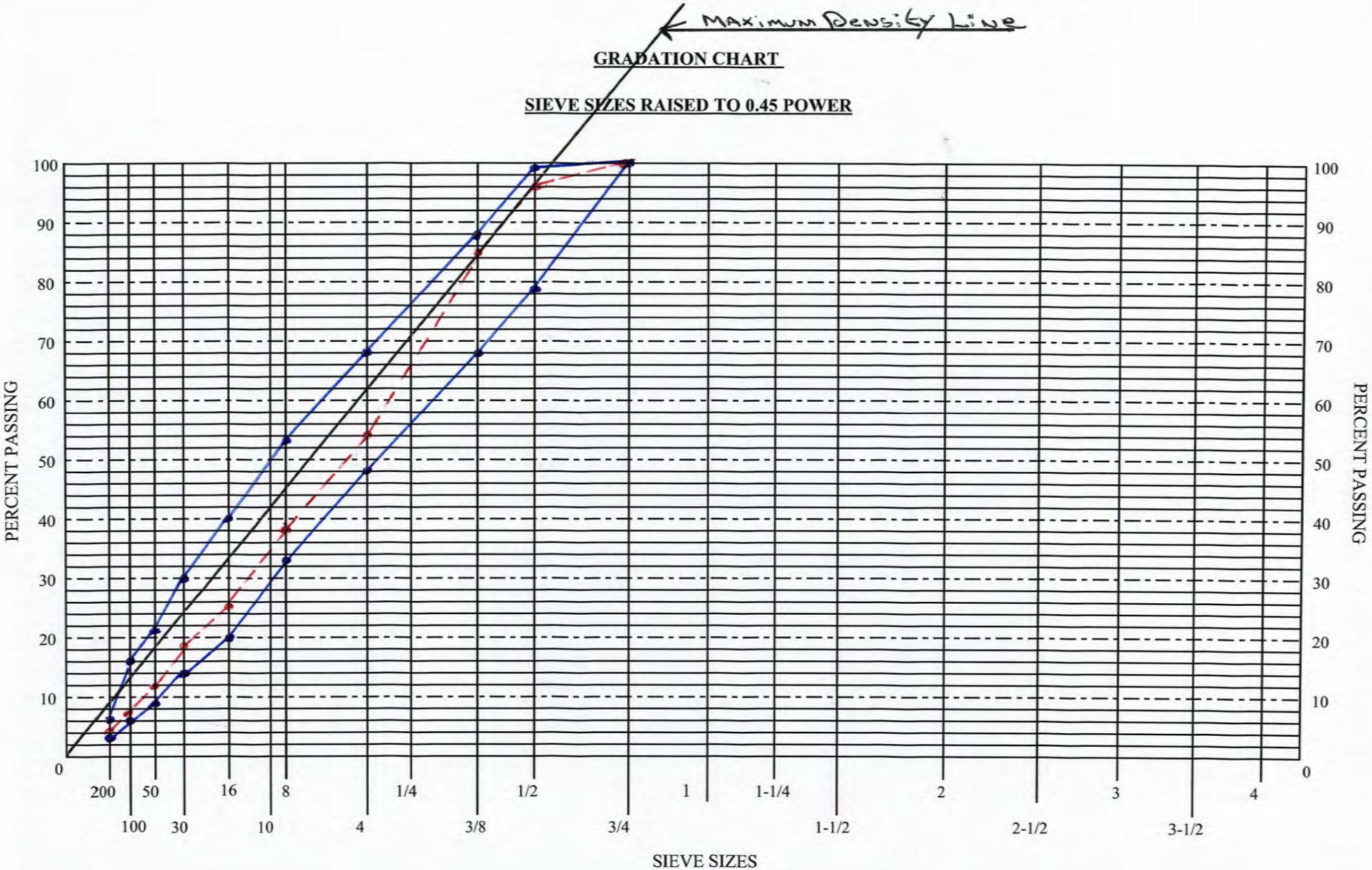

Identification of Gradation : **P - 401 Superpave PG 64S -22 0.75" Max. Surface**
0.75" Nominal Particle Size

Aggregate Sample Project

Project Name: Reflective Cracking Phase V
Technician: Keith P. Sterling
Date: 12/12/2016

Filename: #NAME?
Description: P-401-64 0.75" Reflective Crack
Nominal Sieve Size: 12.5 mm

	Blend 1	Blend 2	Blend 3	Blend 4	Blend 5
Rcy.					
# 7 BB	16.0				
#8 BB	39.5				
#9 PTR	8.0				
#10 BB	25.5				
Mfg. S	11.0				
REP Sand	0.0				
M.F.					
	100.00	0.00	0.00	0.00	0.00

Sieve Size	Blend 1	Blend 2	Blend 3	Blend 4	Blend 5	Min/Max Limits	Restricted Zone
50.00	100.0	0.0	0.0	0.0	0.0	-	
37.50	100.0	0.0	0.0	0.0	0.0	-	
25.00	100.0	0.0	0.0	0.0	0.0	-	
19.00	100.0	0.0	0.0	0.0	0.0	100 -	
12.50	96.0	0.0	0.0	0.0	0.0	79 - 99	
9.50	85.0	0.0	0.0	0.0	0.0	68 - 88	
4.75	54.5	0.0	0.0	0.0	0.0	48 - 68	-
2.36	38.0	0.0	0.0	0.0	0.0	33 - 53	-
1.18	25.2	0.0	0.0	0.0	0.0	20 - 40	-
0.60	18.5	0.0	0.0	0.0	0.0	14 - 30	-
0.30	11.8	0.0	0.0	0.0	0.0	9 - 21	-
0.150	7.1	0.0	0.0	0.0	0.0	6 - 16	
0.075	4.1	0.0	0.0	0.0	0.0	3 - 6	

Stockpiles							
Rcy.	# 7 BB	#8 BB	#9 PTR	#10 BB	Mfg. S	REP Sand	M.F.
100.0	100.0	100.0	100.0	100.0	100.0	100.0	100.0
100.0	100.0	100.0	100.0	100.0	100.0	100.0	100.0
100.0	100.0	100.0	100.0	100.0	100.0	100.0	100.0
100.0	100.0	100.0	100.0	100.0	100.0	100.0	100.0
94.3	75.0	100.0	100.0	100.0	100.0	100.0	100.0
91.2	36.0	88.0	100.0	100.0	100.0	100.0	100.0
64.8	5.0	26.0	89.4	99.0	100.0	98.5	100.0
48.9	2.0	8.0	28.0	92.5	78.6	95.0	100.0
39.3	1.7	4.5	12.4	64.5	52.2	79.0	100.0
30.1	1.6	2.8	8.2	49.0	36.0	55.5	100.0
18.8	1.5	2.5	6.7	29.5	23.2	24.0	97.2
11.4	1.4	2.3	5.5	16.5	11.7	7.5	92.4
8.3	1.2	2.2	4.1	8.5	4.9	0.5	89.0

	Blend 1	Blend 2	Blend 3	Blend 4	Blend 5	Specs.
Gsb	2.931					
Gsa	3.006					
% Absorption	0.73					
Sand Equiv.	79.2					45% min.
%Flat and Elongated Particles	1.0					10% max
%Fine Ag. Ang.	47.9					45% min
%Coarse Agg. Ang. (1 or more)	100.0					85% min
%Coarse Agg. Ang. (2 or more)	100.0					80% min
Va (assumed)	4.0	4.0	4.0	4.0	4.0	
Pb (assumed)	5.0	5.0	5.0	5.0	5.0	
Gse (est.)	2.967					
Ws	2.477					
Vba (est.)	0.010					
Vbe (est.)	0.102	0.102	0.102	0.102	0.102	
Pbi (est.)	4.5					

	2.986	2.975	2.621	2.913	2.992	2.598	2.832
	3.016	3.020	2.760	3.040	3.056	2.642	2.862
	0.34	0.50	0.68	1.43	0.56	0.64	
				78.0	82.0	91.0	
	2.0	0.8	0.0				
				48.1	47.6	41.9	
	100.0	100.0	100.0				
	100.0	100.0	100.0				

Absorption Multiplier	0.48
Gb	1.041
Traffic (million ESAL's)	3.0
Depth from Surface (mm)	75.0

A.E. Stone, Inc.
1435 Doughty Rd. Egg Harbor Twp., NJ 08234-2229

Date Prepared : August 8, 2018
Description of Mix : P - 401 Superpave PG 64S -22 0.75" Max. Surface
Nominal Max. Size of Agg. 3/4" Std. - 19mm
Description of Project : Reflective Cracking Phase VI Construction

Prepared by : Keith P. Sterling
Title : Quality Control Manager S.A.T.II
Representing : A.E. Stone, Inc.

KPILE GRADATIONS

Material Type	Birdsboro - #7		Birdsboro - # 8		Douglasville - # 8		Birdsboro - # 10		Gibraltar Mfg. S.		Mineral Filler		Sum	P - 401 Surface		
Dry Agg. %	16.0	+	39.5	+	8.0	+	25.5	+	11.0	+	0.0	=	100.0			
Sieve Size Std. Metric	% Pass.	% Batch	% Pass.	% Batch	% Pass.	% Batch	% Pass.	% Batch	% Pass.	% Batch	% Pass.	% Batch	Theor. Combine	Spec. Min.		Spec. Max.
2" (50mm)																
1.25" (37.5mm)																
1" (25.0mm)																
3/4" (19.0mm)	100.0	16.0	100.0	39.5	100.0	8.0	100.0	25.5	100.0	11.0	100.0	-	100.0	100		
1/2" (12.5mm)	75.0	12.0	100.0	39.5	100.0	8.0	100.0	25.5	100.0	11.0	100.0	-	96.0	79	-	99
3/8" (9.5mm)	36.0	5.8	88.0	34.8	100.0	8.0	100.0	25.5	100.0	11.0	100.0	-	85.0	68	-	88
No. 4 (4.75mm)	5.0	0.8	26.0	10.3	89.4	7.2	99.0	25.2	99.0	10.9	100.0	-	54.4	48	-	68
No. 8 (2.36mm)	2.0	0.3	8.0	3.2	28.0	2.2	92.5	23.6	78.6	8.6	100.0	-	38.0	33	-	53
No. 16 (1.18mm)	1.7	0.3	4.5	1.8	12.4	1.0	64.5	16.4	52.2	5.7	100.0	-	25.2	20	-	40
No. 30 (600um)	1.6	0.3	2.8	1.1	8.2	0.7	49.0	12.5	36.0	4.0	100.0	-	18.5	14	-	30
No. 50 (300um)	1.5	0.2	2.5	1.0	6.7	0.1	29.5	7.5	23.2	2.6	100.0	-	11.4	9	-	21
No. 100 (150um)	1.4	0.2	2.3	0.9	5.5	0.4	16.5	4.2	12.0	1.3	98.0	-	7.1	6	-	16
No. 200 (75 um)	1.2	0.2	2.2	0.9	4.1	0.3	8.0	2.0	4.9	0.5	89.0	-	4.0	3	-	6
Asp. Cement %													5.3	5.0	-	7.5

BIN GRADATIONS

Hot Bin No.	Bin - 5		Bin - 4		Bin - 3		Bin - 2		Bin - 1		Bin - 6		Sum	P - 401 Surface		
Dry Agg. %		+	0.0	+	0.0	+	0.0	+	0.0	+	0.0	=	0.0			
Sieve Size Std. Metric	% Pass.	% Batch	% Pass.	% Batch	% Pass.	% Batch	% Pass.	% Batch	% Pass.	% Batch	% Pass.	% Batch	Theor. Combine	Spec. Min.		Spec. Max.
2" (50mm)																
1.25" (30.0mm)																
1" (25.0mm)																
3/4" (19.0mm)		-	73.5	-	100.0	-	100.0	-	100.0	-	100.0	-	-	100	-	
1/2" (12.5mm)		-	11.5	-	98.0	-	100.0	-	100.0	-	100.0	-	-	79	-	99
3/8" (9.5mm)		-	2.0	-	68.0	-	100.0	-	100.0	-	100.0	-	-	68	-	88
No. 4 (4.75mm)		-	1.5	-	2.5	-	39.0	-	98.4	-	100.0	-	-	48	-	68
No. 8 (2.36mm)		-	1.5	-	1.0	-	4.5	-	90.0	-	100.0	-	-	33	-	53
No. 16 (1.18mm)		-	0.5	-	0.5	-	1.0	-	68.9	-	100.0	-	-	20	-	40
No. 30 (600um)		-	0.5	-	0.5	-	1.0	-	48.0	-	100.0	-	-	14	-	30
No. 50 (300um)		-	0.5	-	0.5	-	0.5	-	25.7	-	100.0	-	-	9	-	21
No. 100 (150um)		-	0.5	-	0.5	-	0.5	-	13.6	-	98.0	-	-	6	-	16
No. 200 (75 um)		-	0.5	-	0.5	-	0.5	-	8.5	-	87.0	-	-	3	-	6

A.E. Stone, Inc.
1435 Doughty Road Egg Harbor Twp. NJ 08234

Date Prepared : August 8, 2018
Description of Mix : P - 401 Superpave PG 64S -22 0.75" Max. Surface
Nominal Max. Size of Agg. 1/2" Std. - 12.5mm
Description of Project : Reflective Cracking Phase VI Construction

Prepared by : Keith P. Sterling
Title : Quality Control Manager S.A.T.II
Representing : A.E. Stone, Inc.

FINE AGGREGATE BLEND RATIO FOR BATCH PLANT BIN 1

Material Type		Birdsboro - #7		Birdsboro - #8		Birdsboro - #10		Gibraltar Mfg. S.		Mineral Filler		Sum	P - 401 1.0 Max		
Dry Agg. %	0.0 +	0.0 +		0.0 +		69.9 +		30.1 +		0.0 =		100.0			
Sieve Size Std. Metric	% Pass.	% Batch	% Pass.	% Batch	% Pass.	% Batch	% Pass.	% Batch	% Pass.	% Batch	% Pass.	% Batch	Theor. Combine	Spec. Min.		Spec. Max.
2" (50mm)																
1.25" (37.5mm)																
1" (25.0mm)																
3/4" (19.0mm)		-	100.0	-	100.0	-	100.0	69.9	100.0	30.1	100.0	-	100.0	100	-	
1/2" (12.5mm)		-	61.0	-	100.0	-	100.0	69.9	100.0	30.1	100.0	-	100.0	79	-	99
3/8" (9.5mm)		-	13.5	-	85.8	-	100.0	69.9	100.0	30.1	100.0	-	100.0	68	-	88
No. 4 (4.75mm)		-	8.5	-	20.2	-	99.0	69.2	98.5	29.6	100.0	-	98.8	48	-	68
No. 8 (2.36mm)		-	3.5	-	5.5	-	92.5	64.7	95.0	28.6	100.0	-	93.3	33	-	53
No. 16 (1.18mm)		-	2.5	-	4.2	-	64.5	45.1	79.0	23.8	100.0	-	68.9	20	-	40
No. 30 (600um)		-	2.3	-	3.4	-	49.0	34.3	55.5	16.7	100.0	-	51.0	14	-	30
No. 50 (300um)		-	2.1	-	2.9	-	29.5	20.6	24.0	7.2	100.0	-	27.8	9	-	21
No. 100 (150um)		-	1.8	-	2.2	-	16.5	11.5	7.5	2.3	98.0	-	13.8	6	-	16
No. 200 (75 um)		-	1.2	-	1.8	-	8.0	5.6	0.5	0.2	89.0	-	5.7	3	-	6
Asp. Cement %													5.3	5.0	-	7.5

FINE AGGREGATE ANGULARITY

Birdsboro - # 10	Combined	Birdsboro # 10	Mfg. Sand
25.5 +	36.5	RATIO	RATIO
Gibratar Mfg. Sand		69.9%	30.1%
11.0 +	AASHTO T-304 A	Uncompacted Voids	Uncompacted Voids
		48.1	47.6
		33.6	14.3

			SPECIFICATION
FINE AGGREGATE ANGULARITY *NOTE: FINAL BLEND RATIO*	AASHTO T-304 A	47.9	≥ 45 %

AGGREGATES & SOILS TESTING CO.

PHYSICAL TESTING OF CRUSHED STONE AND SOILS
AASHTO ACCREDITED • AMRL INSPECTED

817 Magaro Road • Enola, PA 17025 • 717-412-0998 • www.aggregatesandsoilstesting.com

Mr. Keith Sterling
A. E. Stone, Inc.
1435 Doughty Road
Egg Harbor Twp, NJ 08234

AST# 18615-1
RECEIVED: February 4, 2016
TESTED: February 6, 2016
SUBMITTED BY CLIENT

SIEVE ANALYSIS & WASH LOSS - ASTM C 136, C 117
#7 Stone Birdsboro Materials, Inc.

SIZE FRACTION	MASS RETAINED	INDIVIDUAL PERCENT RETAINED	PERCENT PASSING
3/4"	0.0	0.0	100.0
1/2"	2204.1	35.2	64.8
3/8"	2629.0	41.9	22.9
#4	1295.8	20.7	2.2
#8	35.1	0.6	1.7
< #8	105.9	1.7	
< #200			0.4

SUBMITTED BY: _____
Ken McNulty, Laboratory Manager

DATE: 2/12/16

AGGREGATES & SOILS TESTING CO.

PHYSICAL TESTING OF CRUSHED STONE AND SOILS
AASHTO ACCREDITED • AMRL INSPECTED

817 Magaro Road • Enola, PA 17025 • 717-412-0998 • www.aggregatesandsoilstesting.com

Mr. Keith Sterling
A. E. Stone, Inc.
1435 Doughty Road
Egg Harbor Twp, NJ 08234

AST# 18625-1
RECEIVED: February 8, 2016
TESTED: February 9, 2016
SUBMITTED BY CLIENT

SIEVE ANALYSIS & WASH LOSS - AASHTO T 11, T 27
Birdsboro Materials Quarry #8

SIZE FRACTION	MASS RETAINED	INDIVIDUAL PERCENT RETAINED	PERCENT PASSING	AASHTO #8 SPECS
1/2"	0.0	0.0	100.0	100
3/8"	354.7	6.8	93.2	85 - 100
#4	3694.6	70.7	22.6	10 - 30
#8	1051.6	20.1	2.4	0 - 10
#16	27.5	0.5	1.9	0 - 5
< #16	100.4	1.9		
< #200			0.6	

SUBMITTED BY: _____
Ken McNulty, Laboratory Manager

DATE: 2/18/16

POTTSTOWN TRAP ROCK
DOUGLASSVILLE QUARRY
An H&K Group Company
An Equal Opportunity Employer

P.T.R. - DOUGLASSVILLE QUARRY

An H&K Group Company
CRUSHED STONE
1 Quarry Rd.
Douglassville, PA 19518

Phone: (610) 326-5921
Fax: (610) 327-0311
www.hkgroup.com

Source : Douglassville Quarry **Approvals:** Penn DOT, NJ, MD, DE

Material : AASHTO #8 Stone **Bulletin 14 Producer Code :** PORO6A14

Description: Coarse clean aggregate with a top size of 1/2". It is suitable for use in hot-mix asphalt, ready-mix concrete, drainage applications, and general use.

AASHTO T27, AASHTO T11		
Typical Gradation*		
Sieve Size	% Passing	Specification
1/2"	100	100
3/8"	90	85-100
#4	14	10-30
#8	3	0-10
#16	2	0-5
Wash Loss	1.4	0-2

** The typical gradation represents an average of production samples. Actual gradations of delivered material may vary within the specification limits.*

Physical Properties**					
ASTM C295	PTM 517	AASHTO T96	PTM 510	ASTM C227	ASTM 4791
Rock Type	PA Skid Resistance	LA Abrasion %	Sodium Sulfate Loss %	ASR %	Thin & Elongated
Argillite	H	15.7	6.5	0.27	3.4

AASHTO T85				AASHTO T19	
Bulk Specific Gravity	SSD Specific Gravity	Apparent Specific Gravity	Absorption	Loose Unit Weight (lbs/ft.^{3})	Rodded Unit Weight (lbs/ft.^{3})
2.663	2.69	2.740	1.10	86	91

***Physical property test results represent annual qualification data and may vary from delivered material. Your project may require additional or more recent testing. All available test data can be made available upon request.*

Prepared By: Mark Lester **Date:** 9/22/2016

AGGREGATES & SOILS TESTING CO.

PHYSICAL TESTING OF CRUSHED STONE AND SOILS

AASHTO ACCREDITED • AMRL INSPECTED

817 Magaro Road • Enola, PA 17025 • 717-412-0998 • www.aggregatesandsoilstesting.com

Mr. Keith Sterling
A. E. Stone, Inc.
1435 Doughty Road
Egg Harbor Twp, NJ 08234

AST# 11851-1

RECEIVED: February 4, 2010

TESTED: February 5, 2010

SUBMITTED BY CLIENT

SIEVE ANALYSIS & WASH LOSS - AASHTO T 11, T 27

PTR - Douglassville Quarry PA #9 Coarse Aggregate

SIEVE SIZE	MASS RETAINED	PERCENT RETAINED	PERCENT PASSING
3/8"	0.0	0.0	100.0
#4	52.5	10.3	89.7
#8	306.3	60.2	29.5
#16	100.1	19.7	9.8
#30	20.9	4.1	5.7
#50	6.2	1.2	4.5
#100	3.7	0.7	3.8
#200	2.8	0.6	3.2
<#200	16.4	3.2	

SUBMITTED BY: Ken McNulty, Laboratory Manager

DATE: 2/8/10

Appendix B – Percent of Asphalt

ASPHALT FILM THICKNESS DETERMINATION

PROCEDURE

3.1 ***Data Required*** ***KNOWS***

a) Pb =	Asphalt Content by weight of mix percent		5.30
b) Gmm =	Maximum Specific Gravity Mix		2.709
c) Gsb =	Bulk specific gravity of the aggregate in mix		2.935
d) Sieve Gradation =	% Passing of designated sieve		
e) Gb =	Binder Specific Gravity PG 64 -22 @ 77°F		1.039
f) Pba =	Percent Absorbed Asphalt		0.12
g) Pb / ASP =	Asphalt Content of the mix by dry weight of aggregate		5.30
h) Gsb / BSG =	Bulk specific gravity of the aggregate in mix		2.935
i) Gmm / TMSG =	Maximum specific gravity of the asphalt mix		2.709
j) Gb / ASG =	Specific Gravity of asphalt binder in the mix		1.039
k)			

3.2 ***Test Procedure***

(SST) = Sum Surface Total

SIEVE SIZE	% Passing	Area Factor	(SST)
50.0mm (2")	0.0		0.0000
37.5mm (1-1/2")	0.0		0.0000
25.0mm (1")	0.0		0.0000
19.0mm (3/4")	100.0	0.41	0.4100
12.5mm (1/2")	96.0	0.41	0.3936
9.5mm (3/8")	85.0	0.41	0.3486
4.75mm (No.4)	54.4	0.41	0.2229
2.36mm (No.8)	38.0	0.82	0.3112
1.18mm (No.16)	25.2	1.64	0.4138
600um (No.30)	18.5	2.87	0.5302
300um (No.50)	11.4	6.14	0.6989
150um (No.100)	6.5	12.29	0.7989
75um (No.200)	4.0	32.77	1.3108
SST = Total Surface Area in (m2/kg)			**5.4387**

3.2a Absorbed Asphalt

Absorbed Asphalt = 0.31

Pba = 0.30

Pb = 5.03 %

Pbe = 4.73 %

Fbe = 8.99 µm (Effective Film Thickness by Total Mix)

P_{200}/P_{be} = 0.84 75µm/Dust to Binder Ratio

Appendix C – Asphalt Performance Grade and Modifier Type

Certificate of Analysis

Supplier:	Associated Asphalt Paulsboro	Phone:	856-599-5077
Terminal:	Crown Point International		
Address:	Paulsboro, NJ 08066		
Sample Grade:	PG 64S-22	Specification:	AASHTO M332
Tank:	109	Date Sampled:	8/10/2018
Lot:	20	Date Tested:	8/13/2018
Volume:	117,547 bbls	Binder Type:	Neat

Method	Test	Result	Units	Spec Limit
Unaged Binder				
AASHTO T228	Specific Gravity @ 77°F	1.034		
	Specific Gravity @ 60°F	1.038		Calculation
	API Gravity @ 60°F	4.8	°API	Calculation
	LBS/GAL	8.644		Calculation
AASHTO T48	Flash Point	326	°C	Min 230
AASHTO T316	Viscosity @ 135°C	0.451	Pa.s	Max 3.0
	Viscosity @ 165°C	0.125	Pa.s	Report
	Lab Mixing Temp °C, min	154	°C	Calculation
	Lab Mixing Temp °C, max	160	°C	Calculation
	Lab Compaction Temp °C, min	143	°C	Calculation
	Lab Compaction Temp °C, max	148	°C	Calculation
AASHTO T315	ODSR Test Temperature	64	°C	
	G*/sin delta	1.39	kPa	Min 1.00
RTFO Aged Binder				
AASHTO T240	Mass Change	-0.192	Wt%	Max +/- 1.0
AASHTO T350	Jnr @ 3.2 kPa	2.599		
	% Diff Jnr	9.69	%	Max 75%
	Pass/Fail Jnr	Pass		
PAV Aged Binder				
AASHTO T315	PDSR Test Temperature	25	°C	
	G*sin delta	3970	kPA	Max 5000
AASHTO T313	BBR Test Temperature	-12	°C	
	Creep Stiffness @ 60 sec	174	MPa	Max 300
	m-value @ 60 sec	0.338		Min 0.300
Classification	**PG CLASSIFICATION**	PG 64S-22		

By providing this data under my signature, I attest to the accuracy and validity of the data contained on the form and certify that no deliberate misrepresentation of test results, in any manner, has occurred.

Testing Laboratory:
Bituminous Technologies, LLC
Paulsboro, NJ

Responsible Technician
Signature: Joe Butterick
AASHTO # Paulsboro - 1494

Approved By:
Signature *Jospeh Butterick*
Jospeh Butterick
Laboratory Manager

Appendix D – Acceptable Range of Mixing and Compaction Temperatures

BATCHING and MIXING TEMPERATURE

SOURCE : Associated Asphalt - Paulsboro NJ

DATE: 8/10/2018

PG GRADE: PG 64 -22 (64S -22)

Tank: # 109

Lot : # 20

LAB MIXING TEMPERATURE

	Minimum Temp.	Maximum Temp.	Maximum Temp.
Degree Celsius	154°C	160°C	**165°C**
Degree Fahrenheit	309°F	320°F	**329°F**

Heat aggregate : (No.1 Mixing Oven)
+/- 5°F to Max. Mixing Temperature

COMPACTION TEMPERATURE

Degree Celsius	143°C	148°C	**153°C**
Degree Fahrenheit	289°F	298°F	**307°F**

Heat mixture : (No. 2 Compaction Oven)
+ 5° C above Max.Compaction Temperature

HEAT MOLDS TO COMPACTION TEMPERATURE

Degree Fahrenheit	280°F	290°F

SHORT TERM AGING 2 Hrs.

Degree Fahrenheit	N/A	N/A

HEAT BINDER TO MIXING TEMPERATURE

Degree Fahrenheit	320°F	325°F

Appendix E – Plots of Air Voids, VMA and Unit Weight vs. Asphalt Content

Form LB - 251-c 11 / 79

PRODUCERS ANALYSIS OF MATERIALS AND JOB MIX FORMULA

TEST PROPERTY CURVES

PRODUCER : *A.E. Stone, Inc.*

MIX NUMBER : ***P - 401 Superpave PG 64S -22 0.75" Max. Surface***

PROJECT : ***Reflective Cracking Phase V Construction***

DATE : *December 12, 2016*

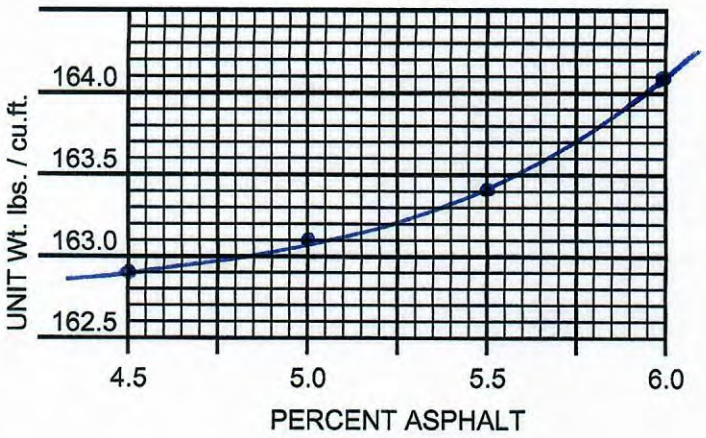

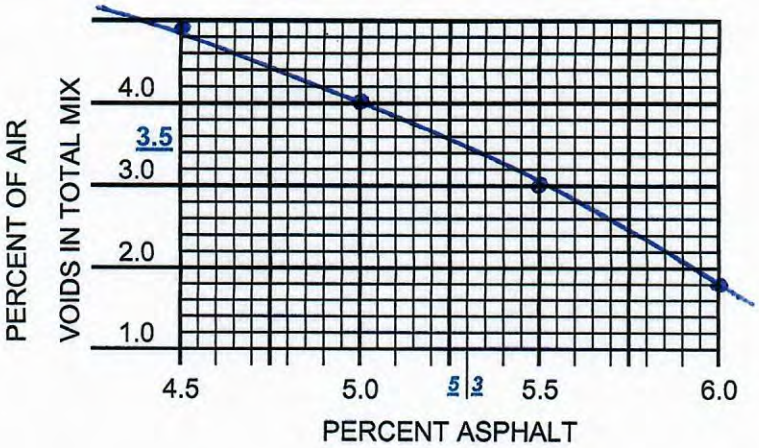

Water bath @ 140°F / 30 min.

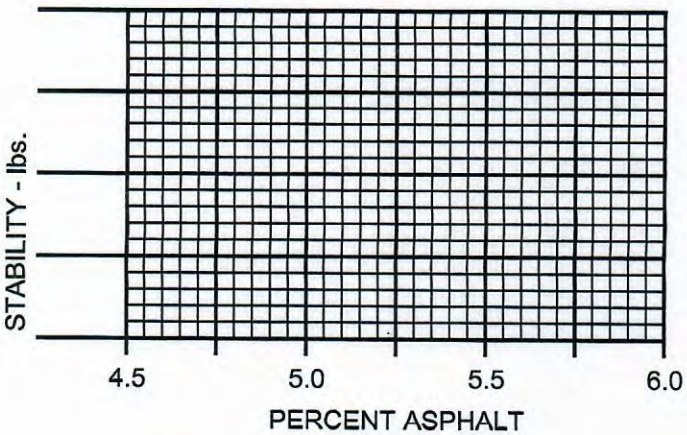

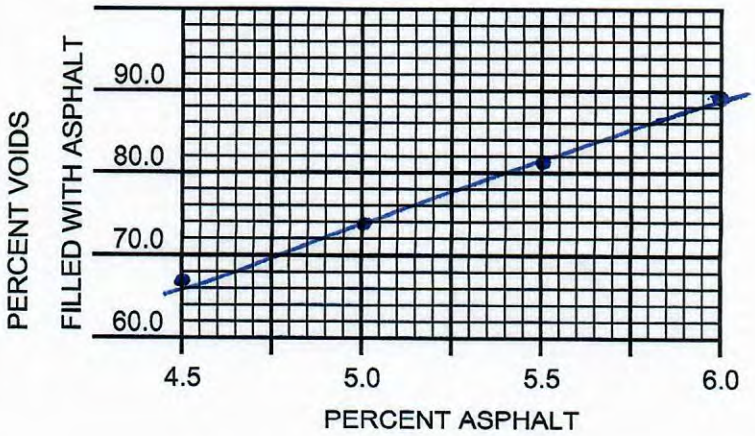

Water bath @ 140°F / 30 min.

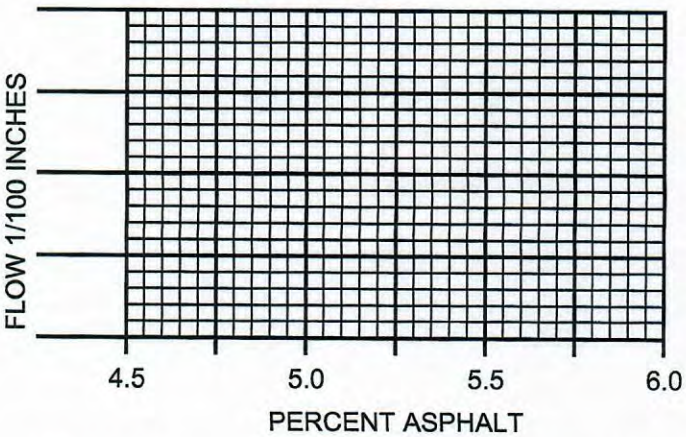

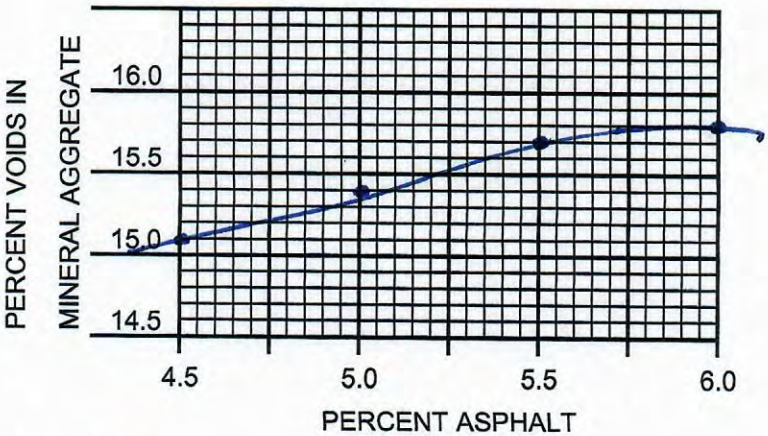

REMARKS :

AC @ Center of Void Spec. : 5.3%

Gyratory : 75 **@ Ndes**

Optimum Asphalt Content : 5.3%

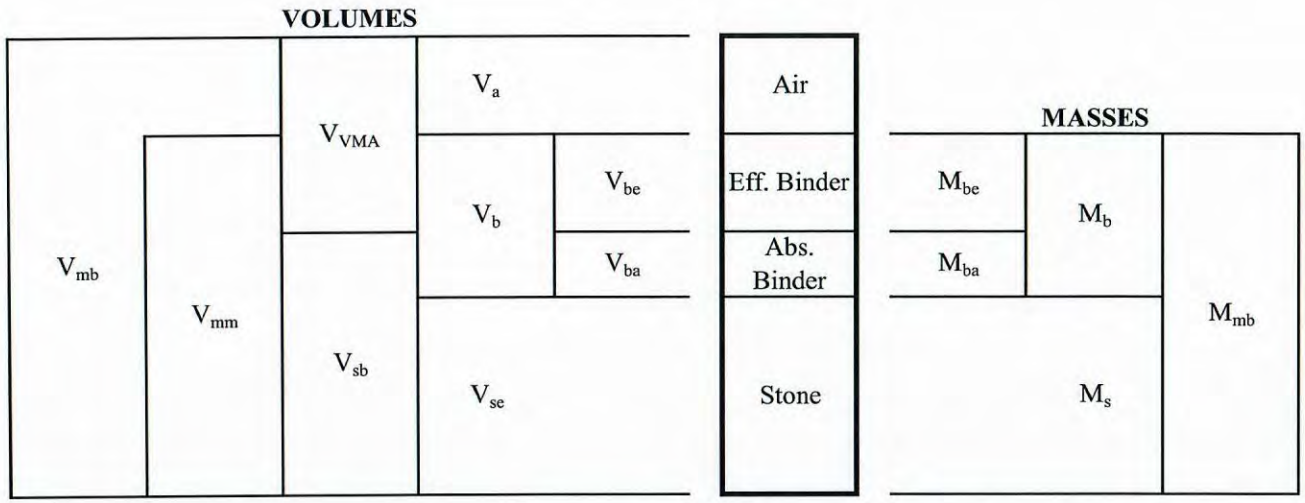

Date	8-Aug-18	Notes	P - 401 Superpave PG 64S -22 0.75" Max. Surface
Tons			
Lab	NCAT	Contractor	A.E. Stone, Inc.
Layer	Section N1 and N2		

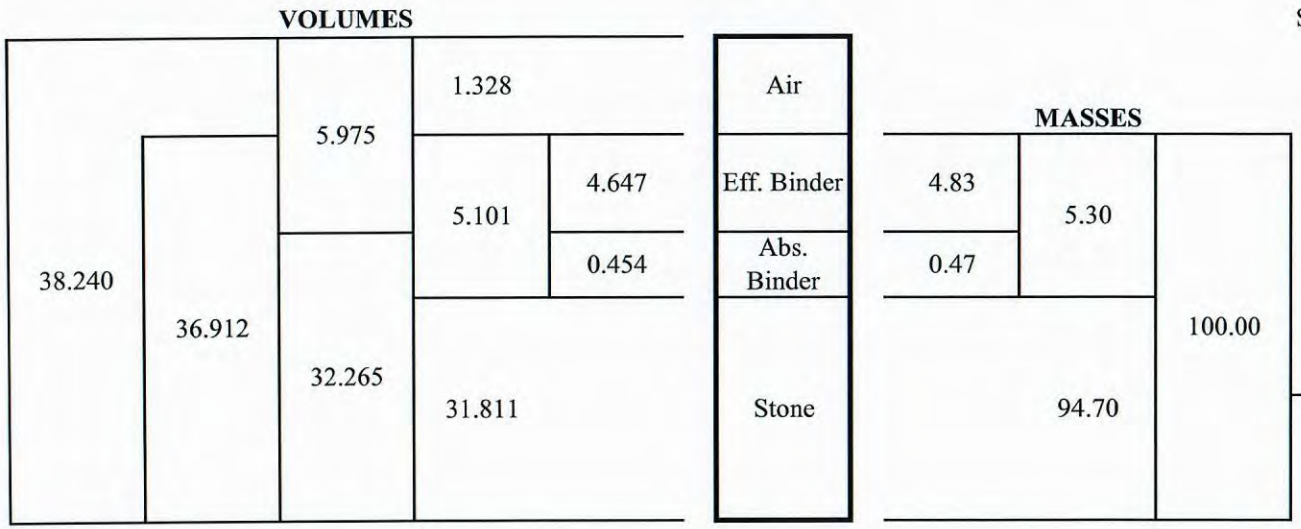

Sieve Size, mm	Passing	S.A.
25.0	0.0	0
19.0	100.0	
12.5	96.0	192.000
9.5	85.0	170.040
4.75	54.4	108.714
2.36	38.0	151.814
1.18	25.2	201.848
0.6	18.5	258.622
0.3	11.4	341.460
0.15	7.1	426.000
0.075	4.0	634.880

24.854	ft^2/lb
5.091	m^2/kg
4.647	V_{be} (cm^3)
0.509	S.A (m^2)
5091	S.A. (cm^2)
9.13	**T_F**

Knowns	
P_b =	**5.30**
G_{sb} =	**2.935**
G_{mm} =	**2.709**
G_b =	**1.039**
G_{mb} =	**2.615**

Calculated		
G_{se} =	2.977	
% AC	13.34	(volume %)
% AC eff.	12.15	(volume %)
P_{be} =	4.83	
P_{ba} =	0.50	

Calculated	
VMA =	15.62
VTM =	3.47
VFA =	77.77
P_{200}/P_{be} =	0.82
T_F =	9.13

Appendix F – Specific Gravity and Absorption for Each Aggregate

JOB MIX FORMULA

DATE	CONTRACT NO.
August 8, 2018	

AIRPORT NAME AND LOCATION

Federal Aviation Administration
William J. Hughes Technical Center
National Airport Pavement Test Facility

DESCRIPTION OF PROJECT

Reflective Cracking Phase VI Construction

CONTRACTOR NAME AND LOCATION

A.E. Stone, Inc.
1435 Doughty Road
Egg Harbor Twp., NJ 08234-2229

BITUMINOUS PLANT

NAME AND LOCATION

A.E. Stone, Inc.
1435 Doughty Road
Egg Harbor Twp., NJ 08234-2229

TYPE	CAPACITY
Gencor Industries Inc. *Counter Flow Dryer* *Drum Mix Plant*	*Production rate : 180 tph - 400 tph* *Silo Storage Capacity : 2 @ 160 tons ea.* *Silo Storage Capacity : 2 @ 250 tons ea.*

SPECIFICATIONS

Federal Aviation Administration
P - 401 Superpave PG 64S -22 0.75" Max. Surface

PREPARED BY

NAME	LOCATION
Keith P. Sterling *Quality Control Manager S.A.T.II*	*1435 Doughty Road* *Egg Harbor Twp., NJ 08234-2229*

INITIAL MATERIAL ACCEPTANCE TESTING

PROPERTY		TEST	VALUE *	SPECIFICATION
COARSE AGGREGATE *# 7 --- 5/8 " Stone* WEAR-ABRASION		ASTM C 131	*17.0%*	WEAR ≤ 40 % SURFACE ≤ 40 % BASE
SOUNDNESS : SODIUM SULFATE MAGNESIUM SULFATE		ASTM C 88 ASTM C 88	*0.2%*	LOSS ≤ 10 % LOSS ≤ 13 %
FLAT ELONGATED PIECES @ 5:1		ASTM D 4791	*2.0%*	≤ 8 %
CRUSHED PIECES	60,000 OR MORE		*100%*	ONE FACE ≥ 65 % 2 OR MORE ≥ 50 %
AIRCRAFT WEIGHT (LBS.)	LESS THAN 60,000		*100%*	ONE FACE ≥ 65 % 2 OR MORE ≥ 50 %
Friable Particles		ASTM C 142	*0.0%*	≤ 1.0 %
FINE AGGREGATE *#10 - Stone Screening*		ASTM C 1252 (A)	*48.1%*	≥ 45%
PLASTICITY INDEX		ASTM D 4318	*0.0%*	≤ 6
LIQUID LIMIT		ASTM D 4318	*< 20%*	≤ 25
SAND EQUIVALENT VALUE		ASTM D 2419	*78.0%*	≥ 45%
SODIUM SULFATE		ASTM C 88	*4.4%*	≤ 10 %
Friable Particles		ASTM D 142	*0.1%*	≤ 1.0 %
FINE AGGREGATE ANGULARITY *NOTE: SEE FINAL BLEND RATIO*		AASHTO T-304 A	*48.1%*	≥ 45 %

*** NOTE : ALL VALUES SHALL BE LISTED EVEN IF FROM STATE CERTIFICATION.**

PRODUCER *A.E. Stone, Inc.*	SPECIFICATION *P - 401 Superpave PG 64S -22 0.75" Max. Surface*
PROJECT *William J. Hughes Technical Center* *Reflective Cracking Phase VI Construction*	DATE *August 8, 2018*
SIGNATURE	AFFILIATION *A.E. Stone, Inc.*

INITIAL MATERIAL ACCEPTANCE TESTING

PROPERTY		TEST	VALUE *	SPECIFICATION
COARSE AGGREGATE *# 8 --- 3/8 " Stone* WEAR-ABRASION		ASTM C 131	*17.0%*	≤ 40 % SURFACE WEAR ≤ 40 % BASE
SOUNDNESS : SODIUM SULFATE MAGNESIUM SULFATE		ASTM C 88 ASTM C 88	*0.2%* *0.0%*	LOSS ≤ 10 % LOSS ≤ 13 %
FLAT ELONGATED PIECES @ 5:1		ASTM D 4791	*0.8%*	≤ 8 %
CRUSHED PIECES	60,000 OR MORE		*100%*	ONE FACE ≥ 65 % 2 OR MORE ≥ 50 %
AIRCRAFT WEIGHT (LBS.)	LESS THAN 60,000		*100%*	ONE FACE ≥ 65 % 2 OR MORE ≥ 50 %
Friable Particles		ASTM C 142	*0.0%*	≤ 1.0 %
FINE AGGREGATE *#10 - Mfg. Sand*		ASTM C 1252 (A)	*47.6%*	≥ 45%
PLASTICITY INDEX		ASTM D 4318	*0.0%*	≤ 6
LIQUID LIMIT		ASTM D 4318	*< 20%*	≤ 25
SAND EQUIVALENT VALUE		ASTM D 2419	*82.0%*	≥ 45%
SODIUM SULFATE		ASTM C 88	*4.9%*	≤ 10 %
Friable Particles		ASTM D 142	*0.0%*	≤ 1.0 %
FINE AGGREGATE ANGULARITY *NOTE: SEE FINAL BLEND RATIO*		AASHTO T-304 A	*47.6%*	≥ 45 %

*** NOTE : ALL VALUES SHALL BE LISTED EVEN IF FROM STATE CERTIFICATION.**

PRODUCER *A.E. Stone, Inc.*	SPECIFICATION *P - 401 Superpave PG 64S -22 0.75" Max. Surface*
PROJECT *William J. Hughes Technical Center Reflective Cracking Phase VI Construction*	DATE *August 8, 2018*
SIGNATURE	AFFILIATION *A.E. Stone, Inc.*

INITIAL MATERIAL ACCEPTANCE TESTING

PROPERTY		TEST	VALUE *	SPECIFICATION
COARSE AGGREGATE ***P.T.R Douglassville #9 (Rice)*** **WEAR-ABRASION**		**ASTM C 131**	***15.7%***	**WEAR** ≤ 40 % **SURFACE** ≤ 40 % **BASE**
SOUNDNESS : **SODIUM SULFATE** **MAGNESIUM SULFATE**		**ASTM C 88** **ASTM C 88**	***6.5%*** *N/A*	**LOSS** ≤ 10 % **LOSS** ≤ 13 %
FLAT ELONGATED PIECES @5:1		**ASTM D 4791**	***3.4%***	≤ 8 %
CRUSHED PIECES	60,000 OR MORE		***100%***	**ONE FACE** ≥ 65 % **2 OR MORE** ≥ 50 %
AIRCRAFT WEIGHT (LBS.)	LESS THAN 60,000		---	**ONE FACE** ≥ 65 % **2 OR MORE** ≥ 50 %
Friable Particles		**ASTM C 142**	***0.0%***	≤ 1.0 %
FINE AGGREGATE **Max: 15%** ***Natural Sand*** **PLASTICITY INDEX**		**ASTM D 4318**	---	≤ 6
LIQUID LIMIT		**ASTM D 4318**	---	≤ 25
SAND EQUIVALENT VALUE		**ASTM D 2419**	---	≥ 45%
PLASTICITY INDEX (FILLER)		**ASTM D 242**	---	≤ 4 %
FINE AGGREGATE ANGULARITY ***NOTE: SEE FINAL BLEND RATIO***		**AASHTO T-304 A**	---	≥ 45%

*** NOTE : ALL VALUES SHALL BE LISTED EVEN IF FROM STATE CERTIFICATION.**

PRODUCER ***A.E. Stone, Inc.***	**SPECIFICATION** ***P - 401 Superpave PG 64S -22 0.75" Max. Surface***
PROJECT ***Atlnatic City International Airport*** ***Reflective Cracking Phase VI Construction***	**DATE** ***August 8, 2018***
SIGNATURE	**AFFILIATION** ***A.E. Stone, Inc.***

AGGREGATE PROPERTIES

MATERIAL *	SOURCE	PERCENT USED IN FINAL AGGREGATE BLEND	BULK SPECIFIC GRAVITY of Aggregates Gsb
# 7 --- 5/8" Stone Diabase Traprock	*Birdsboro Materials Quarry Birdsboro, PA 19508-2664*	*16.0%*	*2.986*
# 8 --- 3/8" Stone Diabase Traprock	*Birdsboro Materials Quarry Birdsboro, PA 19508-2664*	*39.5%*	*2.975*
# 9 --- Rice Stone Argillite	*Pottstown Traprock Douglasville, PA 19508-2664*	*8.0%*	*2.663*
# 10 --- Screenings Diabase Traprock	*Birdsboro Materials Quarry Birdsboro, PA 19508-2664*	*25.5%*	*2.913*
# 10 --- Mfg. Sand Diabase Traprock	*Gibraltar Rock Quarry 384 Woodbine Ocean View Rd. NJ*	*11.0%*	*2.992*

ASPHALT PROPERTIES

GRADE	SOURCE	SPECIFIC GRAVITY
PG 64 -22 (64S -22)	*Axeon Marketing LLC 4 Paradise Road Paulsboro, New Jersey 08066*	*1.039 @ 77°F*

ASTM D 2041 : OPTIMUM ASPHALT CONTENT / MAXIMUM SPECIFIC GRAVITY OF MIX = 2.709

*** NOTE : WHEN A BLEND OF NATURAL SAND AND STONE SCREENINGS ARE USED, INDICATE THE PERCENTAGE OF EACH.**

SIGNATURE	AFFILIATION
	A.E. Stone, Inc.

Gsb PROPERTIES OF AGGREGATE IN TOTAL BLEND

MATERIAL *	SOURCE	MS - 2 Asphalt Institute BULK SPECIFIC GRAVITY of Total Agg. Gsb	MS - 2 Asphalt Institute JMF Formula Percentage Verification of Gmm	
# 57 --- 3/4" Stone Diabase Traprock	*Birdsboro Materials Quarry Birdsboro, PA 19508-2664*	5.358	15.2%	5.074
# 8 --- 3/8" Stone Diabase Traprock	*Birdsboro Materials Quarry Birdsboro, PA 19508-2664*	13.277	37.4%	12.574
# 9 --- Rice Stone Argillite	*Pottstown Traprock Quarry Douglassville, PA 19508-2664*	3.004	7.6%	2.845
# 10 --- Screenings Diabase Traprock	*Birdsboro Materials Quarry Birdsboro, PA 19508-2664*	8.754	24.1%	8.290
# 10 --- Mfg. Sand Diabase Traprock	*Gibraltar Rock Quarry Belle Mead, NJ 08502*	3.676	10.4%	3.476
PG 64 -22 (64S)	*Axeon Marketing LLC 4 Paradise Road Paulsboro, New Jersey 08066*		5.3%	5.101
			100.0%	37.360

Gsb = Bulk Specific Gravity of Aggregate **2.935** **Gmm** **2.677**

*** NOTE : WHEN A BLEND OF NATURAL SAND AND STONE SCREENINGS ARE USED, INDICATE THE PERCENTAGE OF EACH.**

SIGNATURE	AFFILIATION
	A.E. Stone, Inc.

SOURCE	Material Description	Percent Used in Final JMF Aggregate Blend	Bulk Specific Gravity of Aggregates Gsb	
Birdsboro Materials Quarry	# 7 --- 5/8" Stone	16.0%	2.986	5.358
Birdsboro Materials Quarry	# 8 --- 3/8" Stone	39.5%	2.975	13.277
Birdsboro Materials Quarry	# 10 --- Screening	25.5%	2.913	8.754
Gibraltar Rock - Belle Meade	# 10 Mfg. Sand	11.0%	2.992	3.676
P.T.R. Douglasville Quarry	# 9 --- 1/4" Stone	8.0%	2.662	3.005

MS-2 4.05 Bulk Specific Gravity of Aggregate Gsb = 2.935

Form No. LB 251 C (4-00)

NEW JERSEY DEPARTMENT OF TRANSPORTATION
MAXIMUM SPECIFIC GRAVITY WORKSHEET (AASHTO - T209)

PRODUCER : A.E. Stone, Inc.

DATE : August 8, 2018

LOCATION : Egg Harbor Twp., NJ 08234-2229

MIX TYPE P - 401 Superpave PG 64S -22 0.

PROJECT : William J. Hughes Technical Center
Reflective Cracking Phase VI Construction

A.I.P. No.

	Sample No. For Tested Mix	1 - 1	1 - 2	1 - 3	Average
Pb	% A.C. in Test Mix	5.0	5.0	5.0	5.0
Gmm	Max. Sp. Gravity ("Rice")	2.726	2.721	2.722	2.723
Gb	Sp.Gr. of A.C.				1.039
Vb	Vol.of A.C. (Pb / Gb)				4.812
Pa	% Agg. In Mix (100-Pb)				95.00
Vm	$\frac{100}{Gmm}$				36.724
Va	Vm - Vb				31.912
Gse	Eff.Sp.Gr.Agg. (Pa / Va)				**2.977**

Calculation of Maximum Specific Gravity of Mixes containing % A.C. other than tested.

Mix No.	Percent A.C. (Pb)	Spec.Gr. of A.C. (Gb)	Vol.of A.C. (Pb / Gb) (Vb)	Agg.in Mix (100 - Pb) (Pa)	Vol.of Agg. (Pa / Gse) (Va)	Total Vol. (Vb + Va) (Vm)	Gmm Max. Sp.Gr. Mix (100 / Vm)
1.	4.5	1.039	4.331	95.5	32.080	36.411	2.746
2.	5.0	1.039	4.812	95.0	31.912	36.724	2.723
3.	5.5	1.039	5.294	94.5	31.744	37.037	2.700
4.	6.0	1.039	5.775	94.0	31.576	37.351	2.677
5.	6.5	1.039	6.256	93.5	31.408	37.664	2.655
Optimum A.C.	**5.3**	**1.039**	**5.101**	**94.7**	**31.811**	**36.912**	**2.709**

New Jersey DOT - Aggregate Properties as of 8/15/18

Producer	Address	Quarry/Pit Location	Rocktype/Material	Size	%Abs	Bulk Sp. Gr.	SSD Sp. Gr.	App. Sp. Gr.	Unit Wt.	DRW	Voids	LA	Cr Ct	%Carb	ASR	Remarks
Birdsboro Materials	PO Box 331 Blooming Glen,PA 18911	Birdsboro,PA	trap rock	#57	0.5	2.957	2.928	2.995	93	104	50	15			0.06	A division of the H&K Group.
Birdsboro Materials	PO Box 331 Blooming Glen,PA 18911	Birdsboro,PA	trap rock	#8	0.6											A division of the H&K Group.
Birdsboro Materials	PO Box 331 Blooming Glen,PA 18911	Birdsboro,PA	trap rock	*5	0.5	2.945	2.955	2.985	96	107	48					A division of the H&K Group.
Birdsboro Materials	PO Box 331 Blooming Glen,PA 18911	Birdsboro,PA	trap rock	*7	0.7	2.903	2.923	2.963	97	107	47					A division of the H&K Group.
Birdsboro Materials	PO Box 331 Blooming Glen,PA 18911	Birdsboro,PA	trap rock	stone sand												A division of the H&K Group.
Pottstown Trap Rock Quarries	PO Box 331 Blooming Glen,PA 18911	Douglasville, PA	argillite	#57	1	2.661	2.687	2.735	85	95	49	12			0.09	Material approved is an argillite (not a "trap rock"). 2 product lines: 1) "commercial", 2) "PennDOT". Only "PennDOT" approvable materials are permitted on NJDOT projects.
Pottstown Trap Rock Quarries	PO Box 331 Blooming Glen,PA 18911	Douglasville, PA	argillite	#8	1.2											Material approved is an argillite (not a "trap rock"). 2 product lines: 1) "commercial", 2) "PennDOT". Only "PennDOT" approvable materials are permitted on NJDOT projects.
Pottstown Trap Rock Quarries	PO Box 331 Blooming Glen,PA 18911	Douglasville, PA	argillite	*9												Material approved is an argillite (not a "trap rock"). 2 product lines: 1) "commercial", 2) "PennDOT". Only "PennDOT" approvable materials are permitted on NJDOT projects.
Pottstown Trap Rock Quarries	PO Box 331 Blooming Glen,PA 18911	Douglasville, PA	argillite	stone sand												Material approved is an argillite (not a "trap rock"). 2 product lines: 1) "commercial", 2) "PennDOT". Only "PennDOT" approvable materials are permitted on NJDOT projects.
Gibraltar Rock, Inc.	355 Newbold Road, Fairless Hills, PA 19030	Belle Mead, NJ	argillite	#57	0.1	2.795	2.799	2.805	91	103	48					Formerly owned by 3M Corp.
Gibraltar Rock, Inc.	355 Newbold Road, Fairless Hills,PA 19030	Belle Mead, NJ	trap rock	#2												
Gibraltar Rock, Inc.	355 Newbold Road, Fairless Hills,PA 19030	Belle Mead, NJ	trap rock	#57	0.4	3.003	3.013	3.039	96	108	49	15			0.04	Formerly owned by 3M Corp.
Gibraltar Rock, Inc.	355 Newbold Road, Fairless Hills,PA 19030	Belle Mead, NJ	trap rock	#8	0.6											Formerly owned by 3M Corp.
Gibraltar Rock, Inc.	355 Newbold Road, Fairless Hills,PA 19030	Belle Mead, NJ	trap rock	DGABC												Formerly owned by 3M Corp.
Gibraltar Rock, Inc.	355 Newbold Road, Fairless Hills,PA 19030	Belle Mead, NJ	trap rock	stone sand												Also complies as a #10 coarse aggregate.

Website Link https://www.state.nj.us/transportation/eng/materials/qualified/QPLDB.shtm

PennDOT - Aggregate Properties

Supplier Name	Physical Address	Supplier Code	Material Code	Material Class	Location	Approval Date	Lab #	Bulk Specific Gravity (SSD)	Bulk Specific Gravity	Absorption	Sodium Sulfate Soundness	ASR AASHTO T303	AASHTO T303 Reactivity Class	ASR ASTM C1293	ASTM C1293 Reactivity Class	Uncompacted Voids	Sand Equivalency	Rock Compositions & Order of Abundance	Skid Resistance Level Type	LA Abrasion	Micro-Deval Loss	Crush Count % 1-Face	Crush Count % 2-Face	Thin & Elongated Pieces (5:1)
Birdsboro Materials	P.O. Box 196 Skippack, PA 19474	BIR06A14	203	A57	Birdsboro, PA	6/15/2018	L18030180	3.008	2.996	0.41	0%			0.026	R0			DI (Diabase): 1	H	18	4			1
Birdsboro Materials	P.O. Box 196 Skippack, PA 19474	BIR06A14	203	A8	Birdsboro, PA	6/15/2018	L18030179	3.005	2.98	0.83	0%			0.026	R0			DI (Diabase): 1	H	24	7			1
Birdsboro Materials	P.O. Box 196 Skippack, PA 19474	BIR06A14	249	AS2	Birdsboro, PA	6/15/2018	L14036639											DI (Diabase): 1		20				
Birdsboro Materials	P.O. Box 196 Skippack, PA 19474	BIR06A14	249	AS3	Birdsboro, PA	6/15/2018	L18036131											DI (Diabase): 1		26				
Birdsboro Materials	P.O. Box 196 Skippack, PA 19474	BIR06A14	207	B3	Birdsboro, PA	6/15/2018	L18036130	2.995	2.974	0.68	5%					49	86	DI (Diabase): 1						
Gibraltar Rock	484 County Route, # 601 Belle Mead, NJ 80520	GIBNJB14	203	A57	Belle Mead, NJ	6/20/2017	L17030271	3.003	2.984	0.62	1%			0.020	R0			DI (Diabase): 1	H	14	7			1
Gibraltar Rock	484 County Route, # 601 Belle Mead, NJ 80520	GIBNJB14	203	A8	Belle Mead, NJ	6/20/2017	L17030272	3.026	3.005	0.71	1%			0.020	R0			DI (Diabase): 1		18	6			4
Gibraltar Rock	484 County Route, # 601 Belle Mead, NJ 80520	GIBNJB14	207	B1	Belle Mead, NJ	7/31/2017	L17036093	3.047	3.029	0.59	6%					48	83	DI (Diabase): 1						
Gibraltar Rock	484 County Route, # 601 Belle Mead, NJ 80520	GIBNJB14	203	S2A	Belle Mead, NJ	5/24/2017	L17030265	3.010	2.989	0.7	2%							DI (Diabase): 1		18				
Gibraltar Rock	484 County Route, # 601 Belle Mead, NJ 80520	GIBNJB14	203	A57	Belle Mead, NJ	7/30/2018	L17030530	2.795	2.788	0.27	1%			0.020	R0			AR (Argillite): 1 DI (Diabase): 2						
Douglassville Quarry	P.O. Box 196 Skippack, PA 19474	POR06A14	203	A57	Douglass Twp, PA	4/10/2018	L18030062	2.662	2.622	1.51	4%			0.021	R0			AR (Argillite): 1	H	12	5			3
Douglassville Quarry	P.O. Box 196 Skippack, PA 19474	POR06A14	203	A8	Douglass Twp, PA	4/20/2018	L18030061	2.676	2.636	1.53	3%			0.021	R0			AR (Argillite): 1	H	14	3			6
Douglassville Quarry	P.O. Box 196 Skippack, PA 19474	POR06A14	249	AS3	Douglass Twp, PA	7/31/2014	L14036623											AR (Argillite): 1		13				
Douglassville Quarry	P.O. Box 196 Skippack, PA 19474	POR06A14	207	B3	Douglass Twp, PA	4/20/2018	L18036047	2.708	2.681	1	4%					50	55	AR (Argillite): 1						
Douglassville Quarry	P.O. Box 196 Skippack, PA 19474	POR06A14	203	S2A	Douglass Twp, PA	5/17/2018	L18030060	2.655	2.613	1.61	8%							AR (Argillite): 1		13				

Website Link https://www.ecamms.pa.gov/Public/Pages/Bulletins/BulletinSearch.aspx?BulletinTypeKey=2

AGGREGATES & SOILS TESTING CO.

PHYSICAL TESTING OF CRUSHED STONE AND SOILS
AASHTO ACCREDITED • AMRL INSPECTED

817 Magaro Road • Enola, PA 17025 • 717-412-0998 • www.aggregatesandsoilstesting.com

Mr. Keith Sterling
A. E. Stone, Inc.
1435 Doughty Road
Egg Harbor Twp, NJ 08234

AST# 18615-2
RECEIVED: February 4, 2016
TESTED: February 18, 2016
SUBMITTED BY CLIENT

SODIUM SULFATE SOUNDNESS - ASTM C 88
#7 Stone Birdsboro Materials, Inc.

SIZE FRACTION	MASS BEFORE	MASS AFTER	PERCENT LOSS	SAMPLE GRADING	CORRECTED LOSS
3/4" x 3/8"	1003.2	1001.4	0.2	0.788	0.1
3/8" x #4	301.5	300.7	0.3	0.212	0.1
			TOTAL PERCENT LOSS		0.2

SUBMITTED BY: _____
Ken McNulty, Laboratory Manager

DATE: 2/18/16

AGGREGATES & SOILS TESTING CO.

PHYSICAL TESTING OF CRUSHED STONE AND SOILS
AASHTO ACCREDITED • AMRL INSPECTED

817 Magaro Road • Enola, PA 17025 • 717-412-0998 • www.aggregatesandsoilstesting.com

Mr. Keith Sterling
A. E. Stone, Inc.
1435 Doughty Road
Egg Harbor Twp, NJ 08234

AST# 18615-3
RECEIVED: February 4, 2016
TESTED: February 8, 2016
SUBMITTED BY CLIENT

LOS ANGELES ABRASION - ASTM C 131
#7 Stone Birdsboro Materials, Inc.

B GRADING

SIZE FRACTION	MASS	TOTAL MASS	MASS (+#12) AFTER	MASS LOSS	PERCENT LOSS
3/4" x 1/2"	2500.2				
		5001.6	4149.8	851.8	17.0
1/2" x 3/8"	2501.4				

SUBMITTED BY: _____
Ken McNulty, Laboratory Manager

DATE: 2/18/16

AGGREGATES & SOILS TESTING CO.

PHYSICAL TESTING OF CRUSHED STONE AND SOILS
AASHTO ACCREDITED • AMRL INSPECTED

817 Magaro Road • Enola, PA 17025 • 717-412-0998 • www.aggregatesandsoilstesting.com

Mr. Keith Sterling
A. E. Stone, Inc.
1435 Doughty Road
Egg Harbor Twp, NJ 08234

AST# 18615-4
RECEIVED: February 4, 2016
TESTED: February 6, 2016
SUBMITTED BY CLIENT

FLAT & ELONGATED PARTICLES - ASTM D 4791 (B @ 5:1)
#7 Stone Birdsboro Materials, Inc.

SIZE FRACTION	# TESTED	MASS TESTED	MASS F & E	% F & E	SAMPLE GRADING	CORRECTED % F & E
3/4" x 1/2"	103	464.9	0.0	0.0	0.360	0.0
1/2" x 3/8"	101	256.1	1.5	0.6	0.429	0.3
3/8" x #4	103	108.4	9.0	8.3	0.211	1.8

WEIGHTED AVERAGE PERCENT FLAT & ELONGATED @ 5:1 **2.0**

SUBMITTED BY: _____
Ken McNulty, Laboratory Manager

DATE: 2/18/16

AGGREGATES & SOILS TESTING CO.

PHYSICAL TESTING OF CRUSHED STONE AND SOILS
AASHTO ACCREDITED • AMRL INSPECTED

817 Magaro Road • Enola, PA 17025 • 717-412-0998 • www.aggregatesandsoilstesting.com

Mr. Keith Sterling
A. E. Stone, Inc.
1435 Doughty Road
Egg Harbor Twp, NJ 08234

AST# 18615-5
RECEIVED: February 4, 2016
TESTED: February 6, 2016
SUBMITTED BY CLIENT

CRUSHED FRAGMENTS - ASTM D 5821
#7 Stone Birdsboro Materials, Inc.

≥ 2 faces	100.0%
≥ 1 face	100.0%

SUBMITTED BY: _____
Ken McNulty, Laboratory Manager

DATE: 2/18/16

AGGREGATES & SOILS TESTING CO.

PHYSICAL TESTING OF CRUSHED STONE AND SOILS
AASHTO ACCREDITED • AMRL INSPECTED

817 Magaro Road • Enola, PA 17025 • 717-412-0998 • www.aggregatesandsoilstesting.com

Mr. Keith Sterling
A. E. Stone, Inc.
1435 Doughty Road
Egg Harbor Twp, NJ 08234

AST# 18615-6
RECEIVED: February 4, 2016
TESTED: February 8, 2016
SUBMITTED BY CLIENT

SPECIFIC GRAVITY AND ABSORPTION - ASTM C 127
#7 Stone Birdsboro Materials, Inc.

% ABSORPTION:	**0.34**
BULK DRY Sp Grv:	**2.986**
BULK SSD Sp Grv:	**2.996**
APPARENT Sp Grv:	**3.016**

SUBMITTED BY: _____
Ken McNulty, Laboratory Manager

DATE: 2/18/16

AGGREGATES & SOILS TESTING CO.

PHYSICAL TESTING OF CRUSHED STONE AND SOILS
AASHTO ACCREDITED • AMRL INSPECTED

817 Magaro Road • Enola, PA 17025 • 717-412-0998 • www.aggregatesandsoilstesting.com

Mr. Keith Sterling
A. E. Stone, Inc.
1435 Doughty Road
Egg Harbor Twp, NJ 08234

AST# 18615-7
RECEIVED: February 4, 2016
TESTED: February 6, 2016
SUBMITTED BY CLIENT

CLAY LUMPS & FRIABLE PARTICLES - ASTM C 142
#7 Stone Birdsboro Materials, Inc.

SIZE FRACTION	MASS TESTED	MASS AFTER	% FRIABLE	SAMPLE GRADING	CORRECTED % FRIABLE
3/4" x 3/8"	2006.2	2006.1	0.0	0.789	0.0
3/8" x #4	1002.3	1002.1	0.0	0.211	0.0
			TOTAL PERCENT FRIABLE		0.0

SUBMITTED BY: _____
Ken McNulty, Laboratory Manager

DATE: 2/18/16

AGGREGATES & SOILS TESTING CO.

PHYSICAL TESTING OF CRUSHED STONE AND SOILS
AASHTO ACCREDITED • AMRL INSPECTED

817 Magaro Road • Enola, PA 17025 • 717-412-0998 • www.aggregatesandsoilstesting.com

Mr. Keith Sterling
A. E. Stone, Inc.
1435 Doughty Road
Egg Harbor Twp, NJ 08234

AST# 18625-2
RECEIVED: February 8, 2016
TESTED: February 9, 2016
SUBMITTED BY CLIENT

SPECIFIC GRAVITY AND ABSORPTION - AASHTO T 85
Birdsboro Materials Quarry #8

% ABSORPTION:	**0.50**
BULK DRY Sp Grv:	**2.975**
BULK SSD Sp Grv:	**2.990**
APPARENT Sp Grv:	**3.020**

SUBMITTED BY: _____ DATE: 2/18/16
Ken McNulty, Laboratory Manager

AGGREGATES & SOILS TESTING CO.

PHYSICAL TESTING OF CRUSHED STONE AND SOILS
AASHTO ACCREDITED • AMRL INSPECTED

817 Magaro Road • Enola, PA 17025 • 717-412-0998 • www.aggregatesandsoilstesting.com

Mr. Keith Sterling
A. E. Stone, Inc.
1435 Doughty Road
Egg Harbor Twp, NJ 08234

AST# 18640-3
RECEIVED: February 8, 2016
TESTED: February 15, 2016
SUBMITTED BY CLIENT

FLAT & ELONGATED PARTICLES - ASTM D 4791 (B @ 5:1)
Birdsboro Materials Quarry #8

SIZE FRACTION	# TESTED	MASS TESTED	MASS F & E	% F & E	SAMPLE GRADING	CORRECTED % F & E
1/2" x 3/8"	104	205.3	0.0	0.0	0.271	0.0
3/8" x #4	102	76.9	0.8	1.0	0.729	0.8

WEIGHTED AVERAGE PERCENT FLAT & ELONGATED @ 5:1 **0.8**

SUBMITTED BY: _____
Ken McNulty, Laboratory Manager

DATE: 2/18/16

AGGREGATES & SOILS TESTING CO.

PHYSICAL TESTING OF CRUSHED STONE AND SOILS
AASHTO ACCREDITED • AMRL INSPECTED

817 Magaro Road • Enola, PA 17025 • 717-412-0998 • www.aggregatesandsoilstesting.com

Mr. Keith Sterling
A. E. Stone, Inc.
1435 Doughty Road
Egg Harbor Twp, NJ 08234

AST# 18625-4
RECEIVED: February 8, 2016
TESTED: February 9, 2016
SUBMITTED BY CLIENT

CRUSHED FRAGMENTS - ASTM D 5821
Birdsboro Materials Quarry #8

≥ 2 faces	100.0%
≥ 1 face	100.0%

SUBMITTED BY: _____
Ken McNulty, Laboratory Manager

DATE: 2/15/16

AGGREGATES & SOILS TESTING CO.

PHYSICAL TESTING OF CRUSHED STONE AND SOILS
AASHTO ACCREDITED • AMRL INSPECTED

817 Magaro Road • Enola, PA 17025 • 717-412-0998 • www.aggregatesandsoilstesting.com

Mr. Keith Sterling
A. E. Stone, Inc.
1435 Doughty Road
Egg Harbor Twp, NJ 08234

AST# 18625-5
RECEIVED: February 8, 2016
TESTED: February 9, 2016
SUBMITTED BY CLIENT

UNIT WEIGHT OF AGGREGATE - AASHTO T 19
Birdsboro Materials Quarry #8

UNIT WEIGHT (rodded): 103.3 lb/cu ft

SUBMITTED BY: _____
Ken McNulty, Laboratory Manager

DATE: 2/17/16

AGGREGATES & SOILS TESTING CO.

PHYSICAL TESTING OF CRUSHED STONE AND SOILS
AASHTO ACCREDITED • AMRL INSPECTED

817 Magaro Road • Enola, PA 17025 • 717-412-0998 • www.aggregatesandsoilstesting.com

Mr. Keith Sterling
A. E. Stone, Inc.
1435 Doughty Road
Egg Harbor Twp, NJ 08234

AST# 11851-2
RECEIVED: February 4, 2010
TESTED: Februarey 7 - 8, 2010
SUBMITTED BY CLIENT

SPECIFIC GRAVITY AND ABSORPTION - ASTM C 127 (modified)
PTR - Douglassville Quarry PA #9 Coarse Aggregate

% ABSORPTION:	**1.93**
BULK DRY Sp Grv:	**2.621**
BULK SSD Sp Grv:	**2.671**
APPARENT Sp Grv:	**2.760**

SUBMITTED BY: Ken McNulty
Ken McNulty, Laboratory Manager

DATE: 2/8/10

AGGREGATES & SOILS TESTING CO.

PHYSICAL TESTING OF CRUSHED STONE AND SOILS
AASHTO ACCREDITED • AMRL INSPECTED

817 Magaro Road • Enola, PA 17025 • 717-412-0998 • www.aggregatesandsoilstesting.com

Mr. Keith Sterling
A. E. Stone, Inc.
1435 Doughty Road
Egg Harbor Twp, NJ 08234

AST# 18616-5
RECEIVED: February 4, 2016
TESTED: February 8, 2016
SUBMITTED BY CLIENT

SAND EQUIVALENT - ASTM D 2419
Birdsboro Materials, Inc. #10 Screenings

CLAY READING: 4.4

SAND READING: 3.4

SAND EQUIVALENT: 78

SUBMITTED BY: _____
Ken McNulty, Laboratory Manager

DATE: 2/22/16

AGGREGATES & SOILS TESTING CO.

PHYSICAL TESTING OF CRUSHED STONE AND SOILS

AASHTO ACCREDITED • AMRL INSPECTED

817 Magaro Road • Enola, PA 17025 • 717-412-0998 • www.aggregatesandsoilstesting.com

Mr. Keith Sterling
A. E. Stone, Inc.
1435 Doughty Road
Egg Harbor Twp, NJ 08234

AST# 18616-1
RECEIVED: February 4, 2016
TESTED: February 19, 2016
SUBMITTED BY CLIENT

SODIUM SULFATE SOUNDNESS - ASTM C 88

Birdsboro Materials, Inc. #10 Screenings

SAMPLE GRADATION

SIEVE SIZE	MASS RETAINED	PERCENT RETAINED	PERCENT PASSING	AASHTO #10 SPECS
3/8"	0.0	0.0	100.0	100
#4	0.0	0.0	100.0	85 - 100
#8	55.0	11.0	89.0	
#16	164.0	32.9	56.1	
#30	112.2	22.5	33.6	
#50	76.6	15.3	18.3	
#100	56.8	11.4	6.9	10 - 30
#200	28.3	5.7	1.2	
<#200	6.2	1.2		

SOUNDNESS

SIZE FRACTION	MASS BEFORE	MASS AFTER	PERCENT LOSS	SAMPLE GRADING	CORRECTED LOSS
3/8" x #4		assumed loss >	7.3	0.0	0.0
#4 x #8	100.0	92.7	7.3	11.0	0.8
#8 x #16	100.0	95.3	4.7	32.9	1.5
#16 x #30	100.0	94.3	5.7	22.5	1.3
#30 x #50	100.0	95.2	4.8	15.3	0.7

TOTAL PERCENT LOSS 4.4

SUBMITTED BY: Ken McNulty, Laboratory Manager

DATE: 2/22/16

AGGREGATES & SOILS TESTING CO.

PHYSICAL TESTING OF CRUSHED STONE AND SOILS
AASHTO ACCREDITED • AMRL INSPECTED

817 Magaro Road • Enola, PA 17025 • 717-412-0998 • www.aggregatesandsoilstesting.com

Mr. Keith Sterling
A. E. Stone, Inc.
1435 Doughty Road
Egg Harbor Twp, NJ 08234

AST# 18616-2
RECEIVED: February 4, 2016
TESTED: February 8, 2016
SUBMITTED BY CLIENT

SPECIFIC GRAVITY AND ABSORPTION - ASTM C 128
Birdsboro Materials, Inc. #10 Screenings

% ABSORPTION:	**1.43**
BULK DRY Sp Grv:	**2.913**
BULK SSD Sp Grv:	**2.955**
APPARENT Sp Grv:	**3.040**

SUBMITTED BY: _____
Ken McNulty, Laboratory Manager

DATE: 2/22/16

AGGREGATES & SOILS TESTING CO.

PHYSICAL TESTING OF CRUSHED STONE AND SOILS

AASHTO ACCREDITED • AMRL INSPECTED

817 Magaro Road • Enola, PA 17025 • 717-412-0998 • www.aggregatesandsoilstesting.com

Mr. Keith Sterling
A. E. Stone, Inc.
1435 Doughty Road
Egg Harbor Twp, NJ 08234

AST# 18616-3
RECEIVED: February 4, 2016
TESTED: February 8, 2016
SUBMITTED BY CLIENT

UNCOMPACTED VOID CONTENT - ASTM C 1252 (A)

Birdsboro Materials, Inc. #10 Screenings

$U_1 = 48.1$

$U_2 = 48.1$

$U_{ave} = 48.1$

SUBMITTED BY: _____
Ken McNulty, Laboratory Manager

DATE: 2/22/16

AGGREGATES & SOILS TESTING CO.

PHYSICAL TESTING OF CRUSHED STONE AND SOILS
AASHTO ACCREDITED • AMRL INSPECTED

817 Magaro Road • Enola, PA 17025 • 717-412-0998 • www.aggregatesandsoilstesting.com

Mr. Keith Sterling
A. E. Stone, Inc.
1435 Doughty Road
Egg Harbor Twp, NJ 08234

AST# 18616-4
RECEIVED: February 4, 2016
TESTED: February 8, 2016
SUBMITTED BY CLIENT

CLAY LUMPS & FRIABLE PARTICLES - ASTM C 142

Birdsboro Materials, Inc. #10 Screenings

SIZE FRACTION	MASS TESTED	MASS AFTER	% FRIABLE
+ #16	32.54	32.52	0.1

SUBMITTED BY: _____
Ken McNulty, Laboratory Manager

DATE: 2/22/16

AGGREGATES & SOILS TESTING CO.

PHYSICAL TESTING OF CRUSHED STONE AND SOILS
AASHTO ACCREDITED • AMRL INSPECTED

817 Magaro Road • Enola, PA 17025 • 717-412-0998 • www.aggregatesandsoilstesting.com

Mr. Keith Sterling
A. E. Stone, Inc.
1435 Doughty Road
Egg Harbor Twp, NJ 08234

AST# 18616-6
RECEIVED: February 4, 2016
TESTED: February 8, 2016
SUBMITTED BY CLIENT

LIQUID / PLASTIC LIMITS OF SOIL - ASTM D 4318
Birdsboro Materials, Inc. #10 Screenings

LIQUID LIMIT	**< 20**
PLASTIC LIMIT	**non-plastic**
PLASTICITY INDEX	**non-plastic**

SUBMITTED BY: _____
Ken McNulty, Laboratory Manager

DATE: 2/22/16

AGGREGATES & SOILS TESTING CO.

PHYSICAL TESTING OF CRUSHED STONE AND SOILS
AASHTO ACCREDITED • AMRL INSPECTED

817 Magaro Road • Enola, PA 17025 • 717-412-0998 • www.aggregatesandsoilstesting.com

Mr. Keith Sterling
A. E. Stone, Inc.
1435 Doughty Road
Egg Harbor Twp, NJ 08234

AST# 18617-5
RECEIVED: February 4, 2016
TESTED: February 8, 2016
SUBMITTED BY CLIENT

SAND EQUIVALENT - ASTM D 2419
Gibraltar #10 Screening

CLAY READING: 4.4

SAND READING: 3.6

SAND EQUIVALENT: 82

SUBMITTED BY: _____
Ken McNulty, Laboratory Manager

DATE: 2/22/16

AGGREGATES & SOILS TESTING CO.

PHYSICAL TESTING OF CRUSHED STONE AND SOILS
AASHTO ACCREDITED • AMRL INSPECTED

817 Magaro Road • Enola, PA 17025 • 717-412-0998 • www.aggregatesandsoilstesting.com

Mr. Keith Sterling
A. E. Stone, Inc.
1435 Doughty Road
Egg Harbor Twp, NJ 08234

AST# 18617-1
RECEIVED: February 4, 2016
TESTED: February 22, 2016
SUBMITTED BY CLIENT

SODIUM SULFATE SOUNDNESS - ASTM C 88
Gibraltar #10 Screening

SAMPLE GRADATION

SIEVE SIZE	MASS RETAINED	PERCENT RETAINED	PERCENT PASSING	AASHTO #10 SPECS
3/8"	0.0	0.0	100.0	100
#4	20.3	4.0	96.0	85 - 100
#8	124.1	24.2	71.8	
#16	124.8	24.3	47.5	
#30	85.6	16.7	30.8	
#50	61.9	12.1	18.8	
#100	57.1	11.1	7.6	10 - 30
#200	33.0	6.4	1.2	
<#200	6.1	1.2		

SOUNDNESS

SIZE FRACTION	MASS BEFORE	MASS AFTER	PERCENT LOSS	SAMPLE GRADING	CORRECTED LOSS
3/8" x #4		assumed loss >	5.9	4.0	0.2
#4 x #8	100.0	94.1	5.9	24.2	1.4
#8 x #16	100.0	93.7	6.3	24.3	1.5
#16 x #30	100.0	93.8	6.2	16.7	1.0
#30 x #50	100.0	94.8	5.2	12.1	0.6

TOTAL PERCENT LOSS 4.9

SUBMITTED BY: Ken McNulty
Ken McNulty, Laboratory Manager

DATE: 2/22/16

AGGREGATES & SOILS TESTING CO.

PHYSICAL TESTING OF CRUSHED STONE AND SOILS
AASHTO ACCREDITED • AMRL INSPECTED

817 Magaro Road • Enola, PA 17025 • 717-412-0998 • www.aggregatesandsoilstesting.com

Mr. Keith Sterling
A. E. Stone, Inc.
1435 Doughty Road
Egg Harbor Twp, NJ 08234

AST# 18617-2
RECEIVED: February 4, 2016
TESTED: February 8, 2016
SUBMITTED BY CLIENT

SPECIFIC GRAVITY AND ABSORPTION - ASTM C 128
Gibraltar #10 Screening

% ABSORPTION:	**0.70**
BULK DRY Sp Grv:	**2.992**
BULK SSD Sp Grv:	**3.013**
APPARENT Sp Grv:	**3.056**

SUBMITTED BY: _____
Ken McNulty, Laboratory Manager

DATE: 2/22/16

AGGREGATES & SOILS TESTING CO.

PHYSICAL TESTING OF CRUSHED STONE AND SOILS
AASHTO ACCREDITED • AMRL INSPECTED

817 Magaro Road • Enola, PA 17025 • 717-412-0998 • www.aggregatesandsoilstesting.com

Mr. Keith Sterling
A. E. Stone, Inc.
1435 Doughty Road
Egg Harbor Twp, NJ 08234

AST# 18617-3
RECEIVED: February 4, 2016
TESTED: February 8, 2016
SUBMITTED BY CLIENT

UNCOMPACTED VOID CONTENT - ASTM C 1252 (A)
Gibraltar #10 Screening

$U_1 = 47.7$
$U_2 = 47.6$

$U_{ave} = 47.6$

SUBMITTED BY: _____
Ken McNulty, Laboratory Manager

DATE: 2/22/16

AGGREGATES & SOILS TESTING CO.

PHYSICAL TESTING OF CRUSHED STONE AND SOILS
AASHTO ACCREDITED • AMRL INSPECTED

817 Magaro Road • Enola, PA 17025 • 717-412-0998 • www.aggregatesandsoilstesting.com

Mr. Keith Sterling
A. E. Stone, Inc.
1435 Doughty Road
Egg Harbor Twp, NJ 08234

AST# 18617-4
RECEIVED: February 4, 2016
TESTED: February 8, 2016
SUBMITTED BY CLIENT

CLAY LUMPS & FRIABLE PARTICLES - ASTM C 142
Gibraltar #10 Screening

SIZE FRACTION	MASS TESTED	MASS AFTER	% FRIABLE
+ #16	39.41	39.4	0.0

SUBMITTED BY: _____
Ken McNulty, Laboratory Manager

DATE: 2/22/16

AGGREGATES & SOILS TESTING CO.

PHYSICAL TESTING OF CRUSHED STONE AND SOILS
AASHTO ACCREDITED • AMRL INSPECTED

817 Magaro Road • Enola, PA 17025 • 717-412-0998 • www.aggregatesandsoilstesting.com

Mr. Keith Sterling
A. E. Stone, Inc.
1435 Doughty Road
Egg Harbor Twp, NJ 08234

AST# 18617-6
RECEIVED: February 4, 2016
TESTED: February 8, 2016
SUBMITTED BY CLIENT

LIQUID / PLASTIC LIMITS OF SOIL - ASTM D 4318
Gibraltar #10 Screening

LIQUID LIMIT	**< 20**
PLASTIC LIMIT	**non-plastic**
PLASTICITY INDEX	**non-plastic**

SUBMITTED BY: _____
Ken McNulty, Laboratory Manager

DATE: 2/22/16

Appendix G – Verification Testing Results

NEW JERSEY DEPARTMENT OF TRANSPORTATION
HMA - LOT DATA

Mix No.	P-401 0.75 Gyratory
Lot No.	1
Serial No.	

PRODUCER: A.E. Stone, Inc. LOCATION: Egg Harbor Twp., NJ 08234

LOT:STARTED: August 9, 2018 (Date) ENDED: August 9, 2018 (Date) EXACT SIZE: 0.00 TONS

	PROJECT SHIPPED TO	DP #	LOCATION	CONTRACTOR	LOADS	TONS SHIPPED
1	P-401 0.75 Reflective Crack Mix Verification					
2						
3						
4						
5						
				TOTAL		0.00

LOT PORTION	A	B	C	D	E	5 SAMPLES		JOB MIX REQUIREMENTS		
Date Sampled	9-Aug									
* Project Shipped To	1									
Inspectors Report #						AVG.		MIN.	MAX.	
Technician Name	AES/KPS									
Inspectors Name										

SIEVE PASSING %	COMPOSITION ANALYSIS						Formula	Control Points		
50.0mm (2")	100.0	100.0	100.0	100.0	100.0	**100.0**	-			
37.5mm (1-1/2")	100.0	100.0	100.0	100.0	100.0	**100.0**	-	-	-	
25.0mm (1")	100.0	100.0	100.0	100.0	100.0	**100.0**	-	-	-	
19.0mm (3/4")	100.0	100.0	100.0	100.0	100.0	**100.0**	100.0	100	-	
12.5mm (1/2")	93.9	100.0	100.0	100.0	100.0	**93.9**	96.0	79	99	
9.5mm (3/8")	82.8	100.0	100.0	100.0	100.0	**82.8**	85.0	68	88	
4.75mm (No.4)	54.0	100.0	100.0	100.0	100.0	**54.0**	54.4	48	68	
2.36mm (No.8)	37.2	100.0	100.0	100.0	100.0	**37.2**	38.0	33	53	
1.18mm (No.16)	27.0	100.0	100.0	100.0	100.0	**27.0**	25.2	20	40	
600um (No.30)	19.4	100.0	100.0	100.0	100.0	**19.4**	18.5	14	30	
300um (No.50)	11.4	100.0	100.0	100.0	100.0	**11.4**	11.4	9	21	
150um (No.100)	7.0	100.0	100.0	100.0	100.0	**7.0**	7.1	6	16	
75um (No.200)	3.9	100.0	100.0	100.0	100.0	**3.9**	4.0	3	6	
Binder Content	5.22	5.22	5.22	0.00	0.00	**5.22**	5.30	5	7.5	

TEST PROPERTY	GYRATORY TEST RESULTS							MIN.	MAX.	
Gmm @ N des	96.66	96.29	96.47			**96.5**		96	97	Req. for Contr
Vtm @ N des	3.3	3.7	3.5			**3.5**		3	4	
Dust/Binder Ratio	0.8					**0.8**		0.6	1.3	
VMA	16.0	16.3	16.1			**16.1**		15		
VFA	79.1	77.2	78.1			**78.1**		65	78	**Design**
TEST PROPERTY	MARSHALL STABILITY & FLOW TEST RESULTS							MIN.	MAX.	**2001**
Vtm @ 75 Blow						**#DIV/0!**		3	5	**Non**
Stability lbs.						**#DIV/0!**		1800		**Requirements**
Flow 0.01 in. SBS Poly						**#DIV/0!**		6	18	**Research**

Volumetric and Gradation tests results are for control only, adjustments made as needed and recorded on LB-64

* IDENTIFY PROJECT BY LINE NUMBER

REMARKS: Lot (conforms) (fails to conform) with job mix requirements.

LOT CONFORMS TO 2007 NJDOT CONTROL REQ. SPEC. REF. 902.02.04-1

Copies To:
REGION SOUTH MATERIALS
RESIDENT ENGINEER
CONTRACTOR
PLANT
PRODUCER

Prepared by: Keith P. Sterling Q/C Manager A.E. Stone 8/9/2018

Approved by: Regional Materials Engineer Date 8/9/2018

LB-400 3/07

NEW JERSEY DEPARTMENT OF TRANSPORTATION
IGNITION METHOD & GYRATORY TEST FOR COMPLIANCE

DAILY REPORT NO. : 2018-1
DP#:

Contract ID : Reflective Cracking Phase VI Construction
PROJECT : NAPTF Reflective Crack Pad Mix Verification
PRODUCER : A.E. Stone, Inc.

CONTRACTOR : A.E. Stone, Inc.
LOCATION : Egg Harbor Twp., NJ 08234

DATE : 08/09/18
MIX NO. : P-401 0.75 Gyratory
SER. NO.:

	Night 8/9/2018 1			Night 8/9/2018 2		
Lot Sample No.	1 - A			1 - B		
Starting Temperature	538°C			538°C		
Elapsed Time	40:00:00			40:00:00		
A-Sample Weight	2085.8			2085.8		
A-Sample Weight Adjusted For Moisture	2085.6			2085.6		
B - Sample Weight After Ignition	1970.1			1970.1		
C-Wgt. Loss	115.5			115.5		
D-% Loss (C/A x 100)	5.54			5.54		
E-Temperature Compensation **	0.14			0.14		
F-Calibration Factor (From Design)	0.18			0.18		
G-% Bitumen (D-E-F)	**5.22**			**5.22**		
SIEVE SIZE	Wgt.	Ret. %	Pass %	Wgt.	Ret. %	Pass %
2" (50.0mm)			**100.0**			**100.0**
1-1/2" (37.5mm)			**100.0**			**100.0**
1" (25.0mm)			**100.0**			**100.0**
3/4" (19.0mm)			**100.0**			**100.0**
1/2" (12.5mm)	120.6	6.1	**93.9**			**100.0**
3/8" (9.5mm)	338.4	17.2	**82.8**			**100.0**
No. 4 (4.75mm)	905.9	46.0	**54.0**			**100.0**
No. 8 (2.36mm)	1236.7	62.8	**37.2**			**100.0**
No. 16 (1.18mm)	1438.9	73.0	**27.0**			**100.0**
No. 30 (600um)	1588.0	80.6	**19.4**			**100.0**
No. 50 (300um)	1746.3	88.6	**11.4**			**100.0**
No. 100 (150um)	1831.6	93.0	**7.0**			**100.0**
No. 200 (75um)	1892.7	96.1	**3.9**			**100.0**
Minus N0. 200	77.3	3.9		1970.1	100.0	
Total Aggregate Weight	1970.0			1970.1		
Weight Before Wash	1970.1	**Max. Unit Wt.**	**168.0**	1970.1	**Max. Unit Wt.**	**168.0**
Weight After Wash	1897.9	**Bulk Unit Wt.**	**162.4**		**Bulk Unit Wt.**	**161.7**
Wash Loss	72.2	**4.0% Fld. Bulk**	**161.3**	1970.1	**4.0% Fld. Bulk**	**161.3**
Fines In Pan	5.1					
Total Minus No. 200	77.3			1970.1		

GYRATION LEVELS	Nini	Ndes	Nmax
	7	75	115
% AC Absorbed:		.18	
Mix Temp.		**310°F**	**310°F**
Sp. Gr. Of Binder (Gb)		**1.039**	**1.039**
Specimen Ht. @ Ndes		115.1	115.9
Specimen Ht. @ Nini		125.3	126.5
Weight in Air		5155.8	5157.3
Weight in Water		3183.1	3180.1
Weight SSD		5164.6	5169.7
Bulk Specific Gravity(Gmb)		**2.602**	**2.592**
Air Voids - %		3.3	3.7
% Gmm @ Ndes		**96.66**	**96.29**
% Gmm @ Nini		**88.79**	**88.22**
Total Volume		38.432	38.578
Effective AC		5.037	5.037
Volume of AC		4.848	4.848
% AC by Volume		12.615	12.568
% VMA		**16.0**	**16.3**
% VFA		**79.1**	**77.2**
Dust / Binder Ratio		**0.8**	**19.9**
MAXIMUM SPECIFIC GRAVITY (Gmm)			
Sample Weight		2120.7	2120.7
Weight in H2O After Vac.		1332.9	1332.9
Wt. Of Displaced H2O		787.8	787.8
Maximum Sp. Gr. (Gmm)		**2.692**	**2.692**
MOISTURE			
Pan Weight		**380.7**	
Wet Weight		**1341.8**	
Dry Weight		**1341.7**	
Moisture Content %		**0.010**	

COPIES TO : Regional Materials Office

Plant File

* Only For Test Method B (without integral scale)

**Only For Test Method A (with integral scale)

I certify that the above test was sampled by me, and that all operations were performed in accordance with NJDOT Specifications and Procedures to the best of my knowledge.

SIGNED :

Department of Transportation Representative

LB-400 3/07

NEW JERSEY DEPARTMENT OF TRANSPORTATION
IGNITION METHOD & GYRATORY TEST FOR COMPLIANCE

DAILY REPORT NO. : 2018-1
DP#:

Contract ID : Reflective Cracking Phase VI Construction
PROJECT : NAPTF Reflective Crack Pad Mix Verification
PRODUCER : A.E. Stone, Inc.

CONTRACTOR : A.E. Stone, Inc.
Egg Harbor Twp., NJ 08234

DATE : 8/9/2018
MIX NO. : P-401 0.75 Gyratory
SER. NO.:

	Night			3 Night		
Lot Sample No.	Lot 1 - C			Lot 1 - D		
Starting Temperature	538°c			538°c		
Elapsed Time	40:00:00					
A-Sample Weight	2085.8					
A-Sample Weight Adjusted For Moisture	2085.6					
B - Sample Weight After Ignition	1970.1					
C-Wgt. Loss	115.5					
D-% Loss (C/A x 100)	5.54					
E-Temperature Compensation **	0.14					
F-Calibration Factor (From Design)	0.18					
G-% Bitumen (D-E-F)	**5.22**					
SIEVE SIZE	Wgt.	Ret. %	Pass %	Wgt.	Ret. %	Pass %
2" (50.0mm)			**100.0**			**100.0**
1-1/2" (37.5mm)			**100.0**			**100.0**
1" (25.0mm)			**100.0**			**100.0**
3/4" (19.0mm)			**100.0**			**100.0**
1/2" (12.5mm)			**100.0**			**100.0**
3/8" (9.5mm)			**100.0**			**100.0**
No. 4 (4.75mm)			**100.0**			**100.0**
No. 8 (2.36mm)			**100.0**			**100.0**
No. 16 (1.18mm)			**100.0**			**100.0**
No. 30 (600um)			**100.0**			**100.0**
No. 50 (300um)			**100.0**			**100.0**
No. 100 (150um)			**100.0**			**100.0**
No. 200 (75um)			**100.0**			**100.0**
Minus N0. 200	1970.1	100.0				
Total Aggregate Weight	1970.1					
Weight Before Wash	1970.1	**Max. Unit Wt.**	**168.0**		**Max. Unit Wt.**	
Weight After Wash		**Bulk Unit Wt.**	**162.0**		**Bulk Unit Wt.**	
Wash Loss	1970.1	**4.0% Fld. Bulk**	**161.3**		**4.0% Fld. Bulk**	
Fines In Pan						
Total Minus No. 200	1970.1					

GYRATION LEVELS	Nini	Ndes	Nmax
	7	75	115
% AC Absorbed:		0.18	
GYRATORY RESULTS TO Ndes			
Mix Temp.		**310°F**	**°F**
Sp. Gr. Of Binder (Gb)		**1.039**	**1.039**
Specimen Ht. @ Ndes		115.3	
Specimen Ht. @ Nini		125.6	
Weight in Air		5172.3	
Weight in Water		3188.0	
Weight SSD		5179.8	
Bulk SpecificGravity(Gmb)		**2.597**	
Air Voids - %		3.5	
% Gmm @ Ndes		**96.47**	
% Gmm @ Nini		**88.56**	
Total Volume		38.509	
Effective AC		5.037	
Volume of AC		4.848	#VALUE!
% AC by Volume		12.590	
% VMA		**16.1**	
% VFA		**78.1**	
Dust / Binder Ratio		**19.9**	**#VALUE!**
MAXIMUM SPECIFIC GRAVITY (Gmm)			
Sample Weight		2120.7	
Weight in H2O After Vac.		1332.9	
Wt. Of Displaced H2O		787.8	
Maximun Sp. Gr. (Gmm)		**2.692**	
MOISTURE			
Pan Weight		**380.7**	
Wet Weight		**1341.8**	
Dry Weight		**1341.7**	
Moisture Content %		**0.010**	

COPIES TO : Regional Materials Office

Plant File

* Only For Test Method B (without integral scale)

**Only For Test Method A (with integral scale)

I certify that the above test was sampled by me, and that all operations were performed in accordance with NJDOT Specifications and Proceedures to the best of my knowledge.

SIGNED :

Department of Transportation Representative

HOT MIX DESIGN DATA by the MARSHALL METHOD
(AASHTO - T245)

Producer : A.E. Stone, Inc.
Plant Location : Egg Harbor Twp., NJ 08234-2229
Type of Mix : P - 401 Superpave PG 64S -22 0.75" Max. Surface

Project : Reflective Cracking Phase V Construction
Location William J. Hughes Technical Center
Date : December 12, 2016

COMPUTATION OF PROPERTIES OF ASPHALT MIXTURES

Sp Gr. AC	Gsb of Agg.														Stability - lbs.		
1.041	2.935	N des.		Weight of test specimens in grams													
Spec. No.	A/C %	Ht. mm	Gmm	In Air	SSD	In Water	Volume	Gmb	% Agg.	lbs. cu. ft.	% Voids	VMA %	VFA %	Sq.Yd.In.	Meas. lbs.	Corr. lbs.	Flow .01 in.
1 - 1		117.0		5231.2	5235.3	3230.4	2004.9	2.609	95.5	162.8	5.0	15.1	66.9	122.1			
1 - 2		116.6		5243.3	5249.3	3238.0	2011.3	2.607	95.5	162.7	5.1	15.2	66.6	122.0			
1 - 3		117.2		5230.1	5237.5	3237.6	1999.9	2.615	95.5	163.2	4.8	14.9	68.0	122.4			
Average	4.50		2.746					2.610		162.9	4.9	15.1	67.2	122.2	#DIV/0!	#DIV/0!	#DIV/0!

Sp Gr. AC	Gsb of Agg.														Stability - lbs.		
1.041	2.935	N des.		Weight of test specimens in grams													
Spec. No.	A/C %	Ht. mm	Gmm	In Air	SSD	In Water	Volume	Gmb	% Agg.	lbs. cu. ft.	% Voids	VMA %	VFA %	Sq.Yd.In.	Meas. lbs.	Corr. lbs.	Flow .01 in.
2 - 1		114.9		5246.0	5251.7	3243.0	2008.7	2.612	95.0	163.0	4.1	15.5	73.6	122.2			
2 - 2		115.6		5252.7	5258.9	3250.7	2008.2	2.616	95.0	163.2	3.9	15.3	74.3	122.4			
2 - 3		116.1		5256.8	5263.0	3251.0	2012.0	2.613	95.0	163.0	4.0	15.4	73.8	122.3			
Average	5.00		2.723					2.613		163.1	4.0	15.4	73.9	122.3	#DIV/0!	#DIV/0!	#DIV/0!

Sp Gr. AC	Gsb of Agg.														Stability - lbs.		
1.041	2.935	N des.		Weight of test specimens in grams													
Spec. No.	A/C %	Ht. mm	Gmm	In Air	SSD	In Water	Volume	Gmb	% Agg.	lbs. cu. ft.	% Voids	VMA %	VFA %	Sq.Yd.In.	Meas. lbs.	Corr. lbs.	Flow .01 in.
3 - 1		115.6		5237.7	5244.1	3244.6	1999.5	2.620	94.5	163.5	3.0	15.7	80.9	122.6			
3 - 2		114.9		5245.2	5254.1	3250.2	2003.9	2.617	94.5	163.3	3.1	15.7	80.6	122.5			
3 - 3		114.2		5243.4	5252.3	3250.3	2002.0	2.619	94.5	163.4	3.0	15.7	80.9	122.6			
Average	5.50		2.700					2.619		163.4	3.0	15.7	80.8	122.6	#DIV/0!	#DIV/0!	#DIV/0!

Sp Gr. AC	Gsb of Agg.														Stability - lbs.		
1.041	2.935	N des.		Weight of test specimens in grams													
Spec. No.	A/C %	Ht. mm	Gmm	In Air	SSD	In Water	Volume	Gmb	% Agg.	lbs. cu. ft.	% Voids	VMA %	VFA %	Sq.Yd.In.	Meas. lbs.	Corr. lbs.	Flow .01 in.
4 - 1		114.7		5218.0	5221.9	3234.3	1987.6	2.625	94.0	163.8	2.0	15.9	87.7	122.9			
4 - 2		115.5		5249.6	5252.4	3256.1	1996.3	2.630	94.0	164.1	1.8	15.8	88.7	123.1			
4 - 3		116.7		5263.2	5264.7	3267.0	1997.7	2.635	94.0	164.4	1.6	15.6	89.7	123.3			
Average	6.00		2.678					2.630		164.1	1.8	15.8	88.7	123.1	#DIV/0!	#DIV/0!	#DIV/0!

VERIFICATION OPTIMUM ASPHALT CONTENT

Sp Gr. AC	Gsb of Agg.														Marshall Plug / A.E. Stone, Inc. Stability - lbs. Lab data info only		
1.041	2.935	N des.		Weight of test specimens in grams													
Spec. No.	A/C %	Ht. mm	Gmm	In Air	SSD	In Water	Volume	Gmb	% Agg.	lbs. cu. ft.	% Voids	VMA %	VFA %	Sq.Yd.In.	Meas. lbs.	Corr. lbs.	Flow .01 in.
5 - 1		115.6		5243.8	5247.0	3242.2	2004.8	2.616	94.7	163.2	3.5	15.6	77.9	122.4			
5 - 2		115.7		5244.9	5247.8	3241.9	2005.9	2.615	94.7	163.2	3.5	15.6	77.7	122.4			
5 - 3		116.0		5245.8	5247.9	3241.7	2006.2	2.615	94.7	163.2	3.5	15.6	77.7	122.4			
Average	5.30		2.709					2.615		163.2	3.5	15.6	77.8	122.4	#DIV/0!	#DIV/0!	#DIV/0!

TYPE OF COMPACTION HAMMER USED : ☐ MANUAL ☑ AUTO MECHANICAL

NUMBER OF GYRATIONS : Ndes @ ☑ 75 Superpave Gyration ☐ 50 Superpave Gyration

SIGNATURE

AFFILIATION : A.E. Stone, Inc.

ASTM D 4867 / D 4867M

(Non - Mandatory Information)

X1. MOISTURE DAMAGE LABORATORY DATA SHEET

Project	**Reflective Cracking Phase V Construction**	AIP No.	
Additive	None	Dosage	0.0%
Compaction Method	Pine Marshall Auto Compactor Model : AFPMC4D S/N 2294	Effort	75 Blow
Date	12/12/2016	Mix Design	**P-401-64 0.75" Superpave Gyratory**

		SOAKED - CONDITIONED				*DRY - UNCONDITIONED*			
Sample I.D.		**1**	**2**	**6**	**Avg.Wet**	**4**	**5**	**3**	**Avg. Dry**
Diameter, mm (in.)	D	4	4	4	4.0	4	4	4	4.0
Thickness, mm(in.)	t	2.5	2.5	2.5	2.5	2.5	2.5	2.5	2.5
Dry Mass in Air	A	1345.1	1344.1	1337.0	1342.1	1318.9	1343.9	1339.9	1334.2
SSD Mass	B	1348.8	1347.6	1339.2	1345.2	1320.1	1345.4	1342.4	1336.0
Mass in Water	C	815.5	813.2	812.7	813.8	799.3	812.6	812.6	808.2
Volume (B - C)	E	533.3	534.4	526.5	531.4	520.8	532.8	529.8	527.8
Bulk Sp. Gr. (A/E)	F	2.522	2.515	2.539	2.526	2.532	2.522	2.529	2.528
Max. Sp. Gr.	G	2.716	2.716	2.716	2.716	2.716	2.716	2.716	2.716
% Air Void (100(G - F/G)	H	7.1	7.4	6.5	7.0	6.8	7.1	6.9	6.9
Volume Air Void, HE / 100	I	38.0	39.5	34.2	37.3	35.2	38.0	36.5	36.6
Load = (Lbs.)	P	---	---	---	---	2850	2850	2975	**2,892**

Saturation 5 min. @ 28 (in.Hg.)

SSD Mass	B'	1372.4	1373.0	1364.8	1370.1				
Mass Water	C'	837.7	836.8	835.5	836.7				
Volume (B' - C')	E'	534.7	536.2	529.3	533.4				
Volume Abs. Water (B' - A)	J'	27.3	28.9	27.8	28.0				
% Saturation (100 J' /I)		71.7	73.1	81.2	75.4				
% Swell (100(E' - E)/E)		0.3	0.3	0.5	0.4				

Conditioned 24h in 140°F Water

Thickness, mm (in.)	t"	2.5	2.5	2.5	2.5				
SSD Mass	B"	1371.3	1371.6	1364.1	1369.00				
Mass in Water	C"	834.2	838.9	830.4	834.50				
Volume (B" - C")	E"	537.1	532.7	533.7	534.50				
Vol. Abs. Water (B" - A)	J"	26.2	27.5	27.1	26.93				
% Saturation, (100J" /I)		68.9%	69.6%	79.2%	0.73				
% Swell 100(E" - E) /E		0.7%	-0.3%	1.4%	0.01				
Load = (Lbs.)	P"	2600	2,550	2700	2617				
	S_{td}	181.4	181.4	189.4					
Wet Strength = 2 P"/π t"D (psi)	S_{tm}	165.5	162.3	171.9					
TSR Percent; 100*S* tm//*S* td	**TSR**	**91.2%**	**89.5%**	**90.8%**	**90.5%**	**75% Minimum**			
Visual Moisture Damage 0 - 5		0	0	0	0.0				
Crack / Break Aggregate 0 - 5		1	0	1	0.7				

APPENDIX L

P-401MR Material Testing

VERIFICATION OF P-401MR MIX AT PLANT

(A.E. STONE)

1435 Doughty Road Egg Harbor Twp. NJ 08234
PHONE: (609) 641 - 2781 FAX: (609) 641 - 9320

CLIENT: General Dynamics

DATE: 04/30/2019 - 05/01/2019

PROJECT: FAA National Airport Pavement Test Facility
Reflective Cracking Phase VI Construction

TESTED BY: Keith P. Sterling

IGNITION OF BITUMEN 308-99'				MECHANICAL GRADATION ANALYSIS AASHTO T30																	
Sublot No.	Indoor Lift 1			Outdoor Lift 1 Trk 1			Outdoor Lift 1 Trk. 2			Indoor Lift 2					Action Limit		Suspension Limit		Range	
Starting Temperature	538°c			538°c			538°c			538°c										
Elapsed Time	25:00:00			36:00:00			34:00:00			31:00:00										
Sample Weight	2075.1			2038.7			2055.7			2045.6										
A -- S. Wgt.Corr.Moist.	2074.0			2037.6			2054.6			2044.5										
B -- Wgt. After Ignition	1961.0			1926.9			1938.7			1924.0										
C -- Loss	113.0			110.7			115.9			120.5										
D -- % Loss	5.45			5.43			5.64			5.89				JMF						
E -- Temp.Comp.	0.14			0.15			0.15			0.15			**Avg.**	Target	Min	Max	Min	Max	Value	Spec.
F -- Calib. Factor	0.18			0.18			0.18			0.18										
H -- % Bitumen	**5.13**			**5.10**			**5.31**			**5.56**			**5.27**	**5.30**	4.85	5.75	4.60	6.00	0.46	0.8
															Action Limit		Suspension Limit		Range	
Sieve Size	Ret Wgt	% Ret.	% Pass.	Ret Wgt	% Ret.	% Pass.	Ret Wgt	% Ret.	% Pass.	Ret Wgt	% Ret.	% Pass.	**Avg.**	**Target**	Min	Max	Min	Max	Value	Spec.
1 1/4"		0.0%	**100.0%**		0.0%	**100.0%**		0.0%	**100.0%**		0.0%	**100.0%**	**100.0**	**100.0**						
1"		0.0%	**100.0%**		0.0%	**100.0%**		0.0%	**100.0%**		0.0%	**100.0%**	**100.0**	**100.0**						
3/4"	0.0	0.0%	**100.0%**	0.0	0.0%	**100.0%**	0.0	0.0%	**100.0%**	0.0	0.0%	**100.0%**	**100.0**	**100.0**						
1/2"	46.0	2.3%	**97.7%**	151.6	7.9%	**92.1%**	118.0	6.1%	**93.9%**	100.2	5.2%	**94.8%**	**94.6**	**96.0**	90.0	100.0	87.0	100.0	5.5	11
3/8"	180.5	9.2%	**90.8%**	412.7	21.4%	**78.6%**	280.1	14.4%	**85.6%**	279.1	14.5%	**85.5%**	**85.1**	**85.0**	79.0	91.0	76.0	94.0	12.2	11
No. 4	841.7	42.9%	**57.1%**	1050.2	54.5%	**45.5%**	913.5	47.1%	**52.9%**	875.8	45.5%	**54.5%**	**52.5**	**54.4**	48.4	60.4	45.4	63.4	11.6	11
No. 8	1212.4	61.8%	**38.2%**	1325.8	68.8%	**31.2%**	1268.8	65.4%	**34.6%**	1237.9	64.3%	**35.7%**	**34.9**	**38.0**						
No. 16	1470.9	75.0%	**25.0%**	1514.1	78.6%	**21.4%**	1497.0	77.2%	**22.8%**	1471.6	76.5%	**23.5%**	**23.2**	**25.2**	20.2	30.2	17.7	32.7	3.6	9.0
No. 30	1622.6	82.7%	**17.3%**	1632.6	84.7%	**15.3%**	1628.6	84.0%	**16.0%**	1608.4	83.6%	**16.4%**	**16.2**	**18.5**						
No. 50	1735.9	88.5%	**11.5%**	1725.9	89.6%	**10.4%**	1729.0	89.2%	**10.8%**	1710.6	88.9%	**11.1%**	**11.0**	**11.4**	8.4	14.4	6.9	15.9	1.0	6.0
No. 100	1825.6	93.1%	**6.9%**	1801.0	93.5%	**6.5%**	1807.7	93.2%	**6.8%**	1790.5	93.1%	**6.9%**	**6.8**	**7.1**						
No. 200	1885.4	96.1%	**3.9%**	1853.0	96.2%	**3.8%**	1861.0	96.0%	**4.0%**	1845.8	95.9%	**4.1%**	**3.9**	**4.0**	2.0	6.0	1.0	7.0	0.2	3.5
No. 200 *	76.3	3.9%		74.2	3.9%		77.8	4.0%		73.8	3.8%									
Total Agg. Weighed	1961.7			1927.2			1938.8			1919.6										
Wgt. Before Wash.	1961.0			1926.9			1938.7			1924.0										
Wgt. After Wash	1891.5			1857.0			1865.5			1850.2										
Loss	69.5			69.9			73.2			73.8										
Fines in Pan	6.8			4.3			4.6													
Total Minus No. 200	76.3			74.2			77.8			73.8										

* Includes Wash Loss and Pan

Average of Control Points	
Avg. % Pass. No. 1/2	**94.6%**
Avg. % Pass. No. 8	**34.9%**
Avg. % Pass. No. 200	**3.9%**
Avg. % Bitumen	**5.27**

MOISTURE CONTENT	
Pan Weight / Tare	171.9
Wet Weight	1665.1
Dry Weight	1664.3
Moisture Loss	0.8
Moisture Content %	0.054

I certify that the above were sampled by me, and that all operations were performed in accordance with FAA ERLPM specifications and procedures to the best of my knowledge.

SIGNED:

Quality Control Manager S.A.T.II

A.E. Stone, Inc.

1435 Doughty Road Egg Harbor Twp. NJ 08234
PHONE: (609) 641 - 2781 FAX : (609) 641 - 0374

BITUMINOUS CONCRETE TESTING REPORT

PRODUCER	DATE
A.E. Stone, Inc.	April 29, 2019

PROJECT NO.		SPECIFICATION	LOT No.	
National Airport Pavement Test Facility	Reflective Cracking Phase VI Cons	P-401-64S 3/4" Max. Superpave Surface	Lot -	Lift 1

Sp Gr. AC 1.039 — **COMPUTATION OF GYRATORY MIX PROPERTIES** — Gyratory @ Ndes 75

SPECIMEN NO.	ASPHALT CONTENT PERCENT	SPECIMEN HT. INCH	WEIGHT - GRAMS			VOLUME CC	SPEC. GRAVITY		VOIDS %	VMA %	Unit Wt.	STABILITY - LB.		FLOW UNITS OF 1/100 IN
			IN AIR	IN WATER	SAT SURF DRY		BULK Gmb	THEOR. Gmm	TOTAL MIX	by wt. of agg. Gsb	lbs. per Cu. Ft.	MEASURED	CON-VERTED	
A	B	C	D	E	F	G	H	I	J	K	M	M	N	O
						(F - E)	(D ÷ G)		100 - (100 × (H ÷ I))	100 - (Gmb x Ps) / Gsb	(H x 62.4)			
Gsb of Agg.	2.956					SUBLOT NO. 1								
ID - Trk 1	5.13	115.3	5074.2	3094.7	5080.3	1985.6	2.555	2.681	4.7	18.0	159.5			
2	5.13					0.0	#DIV/0!	2.681	#DIV/0!	#DIV/0!	#DIV/0!			
3	5.13					0.0	#DIV/0!	2.681	#DIV/0!	#DIV/0!	#DIV/0!			
AVG	**5.13**		**5074.2**	**3094.7**	**5080.3**	**1985.6**	**2.555**	**2.681**	**4.7**	**18.0**	**159.5**	**#DIV/0!**	**#DIV/0!**	**#DIV/0!**
Gsb of Agg.	2.956					SUBLOT NO. 2								
OD Trk 1	5.10	114.8	5070.8	3107.6	5079.5	1971.9	2.572	2.677	3.9	17.4	160.5			
2	5.10					0.0	#DIV/0!	2.677	#DIV/0!	#DIV/0!	#DIV/0!			
3	5.10					0.0	#DIV/0!	2.677	#DIV/0!	#DIV/0!	#DIV/0!			
AVG	**5.10**		**5070.8**	**3107.6**	**5079.5**	**1971.9**	**2.572**	**2.677**	**3.9**	**17.4**	**160.5**	**#DIV/0!**	**#DIV/0!**	**#DIV/0!**
Gsb of Agg.	2.956					SUBLOT NO. 3								
OD Trk 2	5.31	116.2	5072.4	3093.0	5084.8	1991.8	2.547	2.674	4.8	18.4	158.9			
2	5.31					0.0	#DIV/0!	2.674	#DIV/0!	#DIV/0!	#DIV/0!			
3	5.31					0.0	#DIV/0!	2.674	#DIV/0!	#DIV/0!	#DIV/0!			
AVG	**5.31**		**5072.4**	**3093.0**	**5084.8**	**1991.8**	**2.547**	**2.674**	**4.8**	**18.4**	**158.9**	**#DIV/0!**	**#DIV/0!**	**#DIV/0!**
Gsb of Agg.	2.963					SUBLOT NO. 4								
ID Lift 2	5.56	114.7	5068.2	3099.1	5073.3	1974.2	2.567	2.686	4.4	18.2	160.2			
2	5.56					0.0	#DIV/0!	2.686	#DIV/0!	#DIV/0!	#DIV/0!			
3	5.56					0.0	#DIV/0!	2.686	#DIV/0!	#DIV/0!	#DIV/0!			
AVG	**5.56**		**5068.2**	**3099.1**	**5073.3**	**658.1**	**2.567**	**2.686**	**4.4**	**18.2**	**160.2**	**#DIV/0!**	**#DIV/0!**	**#DIV/0!**

CALCULATIONS BY:	AFILLIATION
Keith P. Sterling SAT II	A.E. Stone, Inc.

A.E. Stone, Inc.

1435 Doughty Road Egg Harbor Twp. NJ 08234
PHONE: (609) 641 - 2781 FAX : (609) 641 - 0374

BITUMINOUS CONCRETE TESTING REPORT

PRODUCER	DATE
A.E. Stone, Inc.	

PROJECT NO.		SPECIFICATION	LOT No.	
ational Airport Pavement Test Facility	Reflective Cracking Phase VI Cons	P-401-64S 3/4" Max. Superpave Surface	Lot - TS Plt.	Lift 1

Sp Gr. AC 1.039 **COMPUTATION OF GYRATORY MIX PROPERTIES** Gyratory @ Ndes 75

SPECIMEN NO.	ASPHALT CONTENT PERCENT	SPECIMEN HT.	WEIGHT - GRAMS			VOLUME CC	SPEC. GRAVITY		VOIDS %	VMA %	VFA %	Unit Wt.	STABILITY - LB.		FLOW UNITS OF 1/100 IN
			IN AIR	IN WATER	SAT SURF DRY		BULK Gmb	THEOR. Gmm	TOTAL MIX	by wt. of agg. Gse	Voids Fill Asp.	lbs. per Cu. Ft.	MEASURED	CON-VERTED	
A	B	C	D	E	F	G	H	I	J	K	L	M	N	O	P
						(F - E)	(D ÷ G)		100 - (100 × (H ÷ I))	100 - (Gmb x Ps) / Gse	(K - J)*100 ÷ K	(H x 62.4)			
Gse of Agg.	2.931					SUBLOT NO. 1									
1	5.13	75.00	3507.1	2165.8	3512.0	1346.2	2.605	2.681	2.8	15.7	82.0	162.6			
2	5.13	75.00	3529.2	2183.6	3533.7	1350.1	2.614	2.681	2.5	15.4	83.9	163.1			
3	5.13	75.00				0.0	#DIV/0!	2.681	#DIV/0!	#DIV/0!	#DIV/0!	#DIV/0!			
AVG	**5.13**		**3518.2**	**2174.7**	**3522.9**	**898.8**	**#DIV/0!**	**2.681**	**#DIV/0!**	**#DIV/0!**	**#DIV/0!**	**#DIV/0!**	**#DIV/0!**	**#DIV/0!**	**#DIV/0!**
Gse of Agg.	2.925					SUBLOT NO. 2									
1	5.10	75.00	3510.9	2170.7	3515.3	1344.6	2.611	2.677	2.5	15.3	83.9	162.9			
2	5.10	75.00	3525.5	2182.5	3528.3	1345.8	2.620	2.677	2.1	15.0	85.7	163.5			
3	5.10	75.00				0.0	#DIV/0!	2.677	#DIV/0!	#DIV/0!	#DIV/0!	#DIV/0!			
AVG	**5.10**		**3518.2**	**2176.6**	**3521.8**	**896.8**	**#DIV/0!**	**2.677**	**#DIV/0!**	**#DIV/0!**	**#DIV/0!**	**#DIV/0!**	**#DIV/0!**	**#DIV/0!**	**#DIV/0!**
Gse of Agg.	2.933					SUBLOT NO. 3									
1	5.31	75.00	3503.0	2153.2	3507.5	1354.3	2.587	2.674	3.3	16.5	80.1	161.4			
2	5.31	75.00	3500.9	2155.3	3505.8	1350.5	2.592	2.674	3.1	16.3	81.2	161.8			
3	5.31	75.00				0.0	#DIV/0!	2.674	#DIV/0!	#DIV/0!	#DIV/0!	#DIV/0!			
AVG	**5.31**		**3502.0**	**2154.3**	**3506.7**	**901.6**	**#DIV/0!**	**2.674**	**#DIV/0!**	**#DIV/0!**	**#DIV/0!**	**#DIV/0!**	**#DIV/0!**	**#DIV/0!**	**#DIV/0!**
Gse of Agg.	2.963					SUBLOT NO. 4									
1	5.56	75.00				0.0	#DIV/0!	2.686	#DIV/0!	#DIV/0!	#DIV/0!	#DIV/0!			
2	5.56	75.00				0.0	#DIV/0!	2.686	#DIV/0!	#DIV/0!	#DIV/0!	#DIV/0!			
3	5.56	75.00				0.0	#DIV/0!	2.686	#DIV/0!	#DIV/0!	#DIV/0!	#DIV/0!			
AVG	**5.56**		**#DIV/0!**	**#DIV/0!**	**#DIV/0!**	**0.0**	**#DIV/0!**	**2.686**	**#DIV/0!**	**#DIV/0!**	**#DIV/0!**	**#DIV/0!**	**#DIV/0!**	**#DIV/0!**	**#DIV/0!**

CALCULATIONS BY:	AFILLIATION
Keith P. Sterling SAT II	A.E. Stone, Inc.

A.E. Stone, Inc.

1435 Doughty Road Egg Harbor Twp. NJ 08234
Phone (609) 641 - 2781 : Fax (609) 641 - 9320

Owner: **FAA National Airport Pavement Test Facility** DATE: **04/30/2019 - 05/01/2019**

PROJECT: **Reflective Cracking Phase VI Construction Facility Building 296 - ANG-E262** TESTED BY: **Keith P. Sterling SAT II**

MAXIMUM SPECIFIC GRAVITY OF BITUMINOUS PAVING MIXTURES

AASHTO T-209

A = Weight of Dry Sample in Air (Grams)
B = Wt. in H2O After Vacuum
C = Wt. of Dispalced H20

$$E = \frac{A}{A - B}$$

Oven temperature for drying samples 52° C $\pm$ 3° C

Test No.	1 Indoor		Test No.	2 Outdoor		Test No.	3 Outdoor		Test No.	4 Indoor	
Water Temp.	77° F		Water Temp.	77° F		Water Temp.	77° F		Water Temp.	77° F	
A.	2161.1	Grams	A.	1860.7	Grams	A.	1784.4	Grams	A.	2040.3	Grams
B.	1354.9	Grams	B.	1165.6	Grams	B.	1117.2	Grams	B.	1280.7	Grams
C.	806.2	Grams	C.	695.1	Grams	C.	667.2	Grams	C.	759.6	Grams
Gmm.	**2.681**		Gmm.	**2.677**		Gmm.	**2.674**		Gmm.	**2.686**	

Remarks: Average Gmm = **2.677**

A.E. Stone, Inc.

1435 Doughty Road **Egg Harbor Twp. NJ 08234**
PHONE: (609) 641 - 2781 **FAX : (609) 641 - 0374**

BITUMINOUS CONCRETE TESTING REPORT

PRODUCER	DATE
A.E. Stone, Inc.	4/29/2019 - 05/01/2019

PROJECT NO.		SPECIFICATION	LOT No.	
National Airport Pavement Test Facility	Reflective Cracking Phase VI Cons	P - 401-64S 3/4" Max. Superpave Surface		Lift 1

Sp Gr. AC 1.039 **COMPUTATION OF MARSHALL MIX PROPERTIES** Marshall @ 75 Blows per face

SPECIMEN NO.	ASPHALT CONTENT PERCENT	SPECIMEN HT. INCH	WEIGHT - GRAMS			VOLUME CC	SPEC. GRAVITY		VOIDS %	VMA %	Unit Wt.	STABILITY - LB.		FLOW UNITS OF 1/100 IN
			IN AIR	IN WATER	SAT SURF DRY		BULK Gmb	THEOR. Gmm	TOTAL MIX	by wt. of agg. Gse	lbs. per Cu. Ft.	MEASURED	CON-VERTED	
A	B	C	D	E	F	G	H	I	J	K	M	M	N	O
						(F - E)	(D ÷ G)		100 - (100 × (H ÷ I))	100 - (Gmb x Ps) / Gse	(H x 62.4)			
Gsb of Agg.	2.956					SUBLOT NO. 1								
1	5.13	2 1/2	1317.3	805.7	1318.3	512.6	2.570	2.681	4.1	17.5	160.4			
2	5.13	2 1/2				0.0	#DIV/0!	2.681	#DIV/0!	#DIV/0!	#DIV/0!			
3	5.13	2 1/2				0.0	#DIV/0!	2.681	#DIV/0!	#DIV/0!	#DIV/0!			
AVG	**5.13**		**1317.3**	**805.7**	**1318.3**	**170.9**	**#DIV/0!**	**2.681**	**#DIV/0!**	**#DIV/0!**	**#DIV/0!**	**#DIV/0!**	**#DIV/0!**	**#DIV/0!**
Gsb of Agg.	2.925					SUBLOT NO. 2								
1	5.10	2 1/2				0.0	#DIV/0!	2.677	#DIV/0!	#DIV/0!	#DIV/0!			
2	5.10	2 1/2				0.0	#DIV/0!	2.677	#DIV/0!	#DIV/0!	#DIV/0!			
3	5.10	2 1/2				0.0	#DIV/0!	2.677	#DIV/0!	#DIV/0!	#DIV/0!			
AVG	**5.10**		**#DIV/0!**	**#DIV/0!**	**#DIV/0!**	**0.0**	**#DIV/0!**	**2.677**	**#DIV/0!**	**#DIV/0!**	**#DIV/0!**	**#DIV/0!**	**#DIV/0!**	**#DIV/0!**
Gsb of Agg.	2.933					SUBLOT NO. 3								
1	5.31	2 1/2				0.0	#DIV/0!	2.674	#DIV/0!	#DIV/0!	#DIV/0!			
2	5.31	2 9/16				0.0	#DIV/0!	2.674	#DIV/0!	#DIV/0!	#DIV/0!			
3	5.31	2 9/16				0.0	#DIV/0!	2.674	#DIV/0!	#DIV/0!	#DIV/0!			
AVG	**5.31**		**#DIV/0!**	**#DIV/0!**	**#DIV/0!**	**0.0**	**#DIV/0!**	**2.674**	**#DIV/0!**	**#DIV/0!**	**#DIV/0!**	**#DIV/0!**	**#DIV/0!**	**#DIV/0!**
Gsb of Agg.	2.963					SUBLOT NO. 4								
1	5.56	2 1/2	1319.8	807.3	1321.1	513.8	2.569	2.686	4.4	18.1	160.3			
2	5.56	2 1/2				0.0	#DIV/0!	2.686	#DIV/0!	#DIV/0!	#DIV/0!			
3	5.56	2 1/2				0.0	#DIV/0!	2.686	#DIV/0!	#DIV/0!	#DIV/0!			
AVG	**5.56**		**1319.8**	**807.3**	**1321.1**	**171.3**	**#DIV/0!**	**2.686**	**#DIV/0!**	**#DIV/0!**	**#DIV/0!**	**#DIV/0!**	**#DIV/0!**	**#DIV/0!**

CALCULATIONS BY:	AFILLIATION
Keith P. Sterling SAT II	A.E. Stone, Inc.

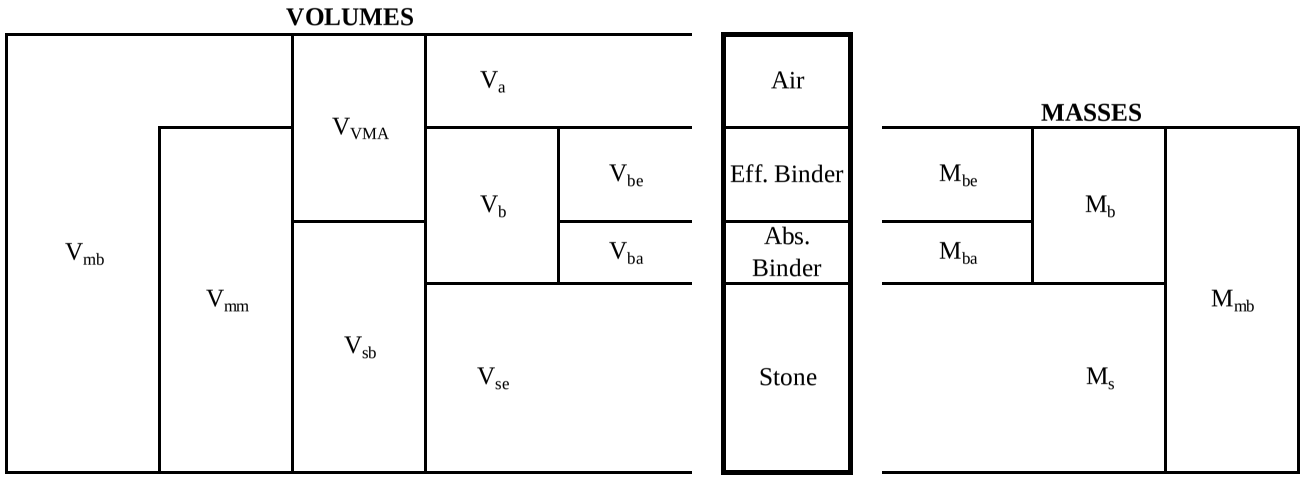

Date	0-Jan-00	Mix Type	P - 401-64S 3/4" Max. Superpave Surface
Tons			
Lab	NCAT	Producer	A.E. Stone, Inc.
Layer	Section N1 and N2		

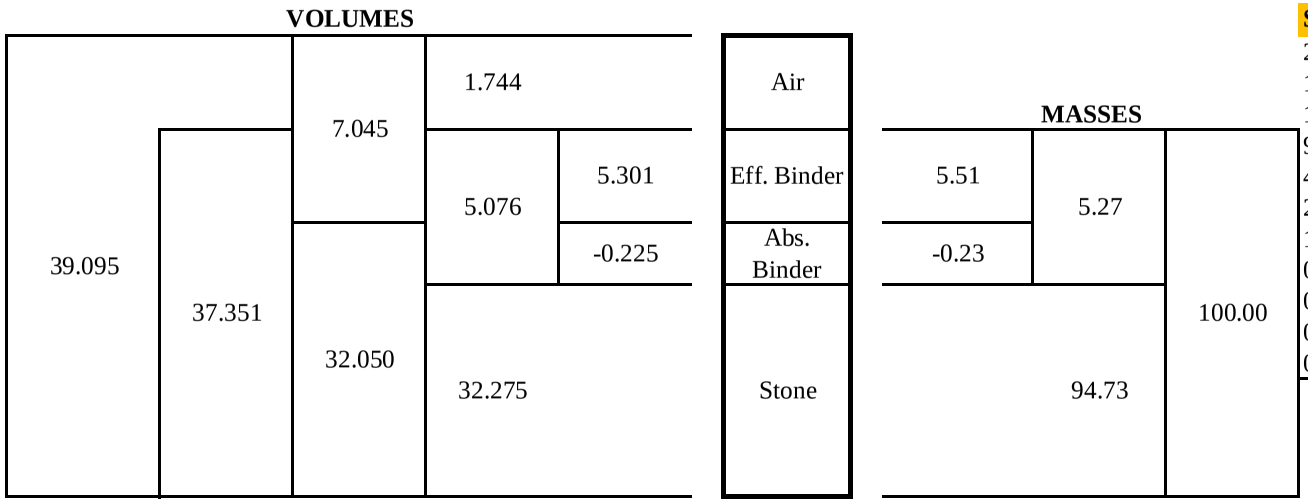

Sieve Size, mm		Passing	S.A.
25mm	(1.0")	100.0	
19mm	(3/4")	100.0	
12.5mm	(1/2")	94.6	189.2461
9.5mm	(3/8")	85.1	170.2118
4.75mm	(No.4)	52.5	104.9685
2.36mm	(No.8)	34.9	139.5837
1.18mm	(No.16)	23.2	185.4243
0.60mm	(No.30)	16.2	227.249
0.30mm	(No.50)	11.0	328.6354
0.15mm	(No.100)	6.8	407.0126
0.075mm	(No.200)	3.9	630.5034

23.828	ft^2/lb
4.881	m^2/kg
5.301	V_{be} (cm^3)
0.488	S.A (m^2)
4881	S.A. (cm^2)
10.86	**T_F**

Units	*Knowns*
P_b =	**5.27**
G_{sb} =	**2.956**
G_{mm} =	**2.677**
G_b =	**1.039**
G_{mb} =	**2.558**

Calculated		
G_{se} =	2.935	
% AC	12.98	(volume %)
% AC eff.	13.56	(volume %)
P_{be} =	5.51	
P_{ba} =	-0.25	

Calculated	
VMA =	**18.0**
Vtm =	**4.5**
VFA =	**75.2**
P_{200}/P_{be} =	**0.72**
T_F =	**10.86**

SOURCE	Material Size Description	Percent Used in Final Aggregate Blend	Bulk Specific Gravity of Aggregates Gsb	
Birdsboro Materials Quarry	# 7 --- 5/8" Stone	17.0%	2.998	0.5097
Birdsboro Materials Quarry	# 8 --- 3/8" Stone	39.0%	2.996	1.1684
Birdsboro Materials Quarry	# 10 --- Screening	24.5%	2.947	0.7220
Gibraltar Rock - Belle Meade	# 10 --- Mfg. Sand	11.0%	2.992	0.3291
P.T.R. Douglasville Quarry	# 9 --- 1/4" Rice Stone	8.5%	2.663	0.2264
R.E. Pierson Oceanview S&G	Concrete Sand	0.0%	2.623	0.0000
		100.0%		

Bulk Specific Gravity of Aggregate Gsb = 2.956

A.E. Stone, Inc.
1435 Doughty Road Egg Harbor Twp. NJ 08234
PHONE: (609) 641 - 2781 FAX: (609) 641 - 9320

AIR VOIDS (VTM) ACCEPTANCE CALCULATION

(LABORATORY GYRATORY SPECIMENS)

PERCENT WITHIN LIMIT (PWL)

SUBLOT 1 (AVERAGE)	=	4.7	*
SUBLOT 2 (AVERAGE	=	3.9	*
SUBLOT 3 (AVERAGE)	=	4.8	*
SUBLOT 4 (AVERAGE)	=	4.4	*
X (AVERAGE)	=	4.5	*
S_N (AVERAGE)	=	0.37	**

L (LOWER LIMIT)	=	2.0	U (UPPER LIMIT)	=	5.0
$Q_L = (X - L) / S_N$	=	6.5449	$Q_U = (U - X) / S_N$	=	1.4654
P_L = (% TABLE 1, SECTION 8)	=	**100.0**	P_U = (% TABLE 1, SECTION 8)	=	**99.0**

$PWL = (P_L + P_U) - 100$

PWL = **99%**

* TO THE NEAREST TENTH (ONE DECIMAL PLACE)

** TO THE NEAREST HUNDREDTH (TWO DECIMAL PLACES)

CALCULATION BY:	DATE:
Keith P. Sterling SAT II	4/29/2019 - 05/01/2019

AFFILIATION

A.E. Stone, Inc.

A.E. Stone, Inc.

1435 Doughty Road Egg Harbor Twp. NJ 08234
PHONE: (609) 641 - 2781 FAX: (609) 641 - 9320

STABILITY ACCEPTANCE CALCULATION

(LABORATORY MARSHALL SPECIMENS)

PERCENT WITHIN LIMIT (PWL)

SUBLOT 1 (AVERAGE)	=	#DIV/0!	*
SUBLOT 2 (AVERAGE	=	#DIV/0!	*
SUBLOT 3 (AVERAGE)	=	#DIV/0!	*
SUBLOT 4 (AVERAGE)	=	#DIV/0!	*
X (AVERAGE)	=	#DIV/0!	*
S_N (AVERAGE)	=	#DIV/0!	**
L (LOWER LIMIT)	=	1800	***
$Q_L = (X - L) / S_N$	=	#DIV/0!	
P_L = (% TABLE 1, SECTION 8)	=	**100%**	

* TO THE NEAREST TENTH (ONE DECIMAL PLACE)
** TO THE NEAREST HUNDREDTH (TWO DECIMAL PLACES)
*** USE VALUE IN TABLE 5 OF SPECIFICATION

CALCULATION BY:	DATE:
Keith P. Sterling SAT II	4/29/2019 - 05/01/2019

AFFILIATION
A.E. Stone, Inc.

A.E. Stone, Inc.

1435 Doughty Road **Egg Harbor Twp. NJ 08234**
PHONE: (609) 641 - 2781 **FAX: (609) 641 - 9320**

FLOW ACCEPTANCE CALCULATION

(LABORATORY MARSHALL SPECIMENS)

PERCENT WITHIN LIMIT (PWL)

SUBLOT 1 (AVERAGE)	=	#DIV/0!	*
SUBLOT 2 (AVERAGE)	=	#DIV/0!	*
SUBLOT 3 (AVERAGE)	=	#DIV/0!	*
SUBLOT 4 (AVERAGE)	=	#DIV/0!	*
X (AVERAGE)	=	#DIV/0!	*
S_N (AVERAGE)	=	#DIV/0!	**

L (LOWER LIMIT)	=	8.0	U (UPPER LIMIT)	=	18.0	***
$Q_L = (X - L) / S_N$	=	#DIV/0!	$Q_U = (U - X) / S_N$	=	#DIV/0!	
P_L = (% TABLE 1, SECTION 8)	=	**100**	P_U = (% TABLE 1, SECTION 8)	=	**100**	

$PWL = (P_L + P_U) - 100$

PWL = **100%**

* TO THE NEAREST TENTH (ONE DECIMAL PLACE)
** TO THE NEAREST HUNDREDTH (TWO DECIMAL PLACES)
*** USE VALUE IN TABLE 5 OF SPECIFICATION

CALCULATION BY:	DATE:
Keith P. Sterling SAT II	4/29/2019 - 05/01/2019

AFFILIATION
A.E. Stone, Inc.

A.E. Stone, Inc.

1435 Doughty Road Egg Harbor Twp. NJ 08234
PHONE: (609) 641 - 2781 FAX: (609) 641 - 9320

VMA ACCEPTANCE CALCULATION

(LABORATORY GYRATORY SPECIMENS)

PERCENT WITHIN LIMIT (PWL)

SUBLOT 1 (AVERAGE)	=	18.0	*
SUBLOT 2 (AVERAGE	=	17.4	*
SUBLOT 3 (AVERAGE)	=	18.4	*
SUBLOT 4 (AVERAGE)	=	18	*
X (AVERAGE)	=	17.9	*
S_N (AVERAGE)	=	0.49	**
L (LOWER LIMIT)	=	15.0	***
$Q_L = (X - L) / S_N$	=	5.9935	
P_L = (% TABLE 1, SECTION 8)	=	**100%**	

* TO THE NEAREST TENTH (ONE DECIMAL PLACE)
** TO THE NEAREST HUNDREDTH (TWO DECIMAL PLACES)
*** USE VALUE IN TABLE 5 OF SPECIFICATION

CALCULATION BY:	DATE:
Keith P. Sterling SAT II	4/29/2019 - 05/01/2019

AFFILIATION

A.E. Stone, Inc.

A.E. Stone, Inc.

1435 Doughty Road **Egg Harbor Twp. NJ 08234**
PHONE: (609) 641 - 2781 **FAX: (609) 641 - 9320**

MAT DENSITY - PERCENT COMPACTION

(LABORATORY MARSHALL SPECIMENS)

PERCENT WITHIN LIMIT (PWL)

SUBLOT 1 (AVERAGE)	=	**#DIV/0!**	*
SUBLOT 2 (AVERAGE)	=	**#DIV/0!**	*
SUBLOT 3 (AVERAGE)	=	**#DIV/0!**	*
SUBLOT 4 (AVERAGE)	=	**#DIV/0!**	*
X (AVERAGE)	=	**#DIV/0!**	*
S_N (AVERAGE)	=	**#DIV/0!**	**

L (LOWER LIMIT)	=	**96.3**	U (UPPER LIMIT)	=	**101.3**	***
$Q_L = (X - L) / S_N$	=	#DIV/0!	$Q_U = (U - X) / S_N$	=	#DIV/0!	
P_L = (% TABLE 1, SECTION 8)	=	**100.0**	P_U = (% TABLE 1, SECTION 8)	=	**96.0**	

$PWL = (P_L + P_U) - 100$

PWL = **100%**

* TO THE NEAREST TENTH (ONE DECIMAL PLACE)
** TO THE NEAREST HUNDREDTH (TWO DECIMAL PLACES)
*** USE VALUE IN TABLE 5 OF SPECIFICATION

CALCULATION BY:	DATE:
Keith P. Sterling SAT II	4/29/2019 - 05/01/2019

AFFILIATION
A.E. Stone, Inc.

A.E. Stone, Inc.

1435 Doughty Road **Egg Harbor Twp. NJ 08234**
PHONE: (609) 641 - 2781 **FAX : (609) 641 - 9320**

JOINT DENSITY PERCENT COMPACTION

PERCENT WITHIN LIMIT (PWL)

SUBLOT 1 (%)	=	#DIV/0!	*
SUBLOT 2 (%)	=	#DIV/0!	*
SUBLOT 3 (%)	=	#DIV/0!	*
SUBLOT 4 (%)	=	#DIV/0!	*
X (AVERAGE)	=	#DIV/0!	*
S_N (AVERAGE)	=	#DIV/0!	*
L (LOWER LIMIT)	=	93.3	
$Q_L = (X - L) / S_N$	=	#DIV/0!	
PWL = (% TABLE 1, SECTION 8)	=	**100%**	

* TO THE NEAREST TENTH (ONE DECIMAL PLACE)

CALCULATION BY:	DATE:
Keith P. Sterling SAT II	4/29/2019 - 05/01/2019

AFFILIATION

A.E. Stone, Inc.

A.E. Stone, Inc.

1435 Doughty Road **Egg Harbor Twp. NJ 08234**
PHONE: (609) 641 - 2781 **FAX: (609) 641 - 9320**

CORE LOCATION LAYOUT

LOCATION OF MAT CORES

0 **Column No. 6**

SUBLOT NO.	SUBLOT LENGTH	SUBLOT WIDTH	COLUMN			LENGTH FROM BEGINNING OF SUBLOT	OFFSET FROM LEFT EDGE	Cumm. Distance Beginning	Length Previous Loacation
			A	B	C				
M - 5	600	16.5	5	0.351	0.414	**210.6**	**6.8**	**210.6**	**----**
M - 6	600	16.5	6	0.277	0.475	**166.2**	**7.8**	**766.2**	**555.6**
M - 7	600	16.5	7	0.804	0.675	**482.4**	**11.1**	**1682.4**	**916.2**
M - 8	600	16.5	8	0.806	0.952	**483.6**	**15.7**	**2283.6**	**601.2**

LOCATION OF JOINT CORES

Column No. 10

SUBLOT NO.	SUBLOT LENGTH	COLUMN		LENGTH FROM BEGINNING OF SUBLOT	Cumm. Distance Beginning	Length Previous Loacation
		A	B			
J - 5	600	5	0.180	**108.0**	**108**	**----**
J - 6	600	6	0.878	**526.8**	**1127**	**1019**
J - 7	600	7	0.728	**436.8**	**1637**	**510**
J - 8	600	8	0.432	**259.2**	**2059**	**422**

IN - PLACE DENSITY ACCEPTANCE CALCULATION

LOCATION OF MAT CORES

SUBLOT NO.	PAVEMENT STATION	OFFSET**
M - 5		
M - 6		
M - 7		
M - 8		

LOCATION OF JOINT CORES

SUBLOT NO.	PAVEMENT STATION
J - 5	
J - 6	
J - 7	
J - 8	
CALCULATIONS BY Keith P. Sterling SAT II	DATE 4/29/2019 - 05/01/2019
AFFILIATION A.E. Stone, Inc.	
NOTE **	

A.E. Stone, Inc.

1435 Doughty Road **Egg Harbor Twp. NJ 08234**
PHONE: (609) 641 - 2781 **FAX: (609) 641 - 9320**

BULK SPECIFIC GRAVITY OF COMPACTED MIXTURE (LAB)

ASTM D 2726

CORE NO.	WEIGHT IN AIR	WEIGHT IN WATER	SAT.-SURF. DRY	VOLUME CU.-CM	SPECIFIC GRAVITY G_{mbl}
SUBLOT	D	E	E^1	F (E^1 - E)	G D / F
1	5074.2	3094.7	5080.3	1985.6	2.555
2	5070.8	3107.6	5079.5	1971.9	2.572
3	5072.4	3093.0	5084.8	1991.8	2.547
4	5068.2	3099.1	5073.3	1974.2	2.567
AVERAGE SPECIFIC GRAVITY OF Gmbl =					**2.558**

CALCULATIONS BY:	DATE
Keith P. Sterling SAT II	4/29/2019 - 05/01/2019

AFILLATION

A.E. Stone, Inc.

A.E. Stone, Inc.

1435 Doughty Road **Egg Harbor Twp. NJ 08234**
PHONE: (609) 641 - 2781 **FAX: (609) 641 - 9320**

0 **Station Ref.**

BULK SPECIFIC GRAVITY OF COMPACTED MIXTURE (MAT)

ASTM D 2726

CORE NO.	WEIGHT IN AIR	WEIGHT IN WATER	SAT.-SURF. DRY	VOLUME CU.-CM	SPECIFIC GRAVITY G_{mb}
SUBLOT	D	E	E^1	F (E^1 - E)	G D / F
M - 5				0.0	#DIV/0!
M - 6				0.0	#DIV/0!
M - 7				0.0	#DIV/0!
M - 8				0.0	#DIV/0!
M - 1B				0.0	#DIV/0!
M - 2B				0.0	#DIV/0!
M - 3B				0.0	#DIV/0!
M - 4B				0.0	#DIV/0!

CALCULATIONS BY: Keith P. Sterling SAT II

. 4/29/2019 - 05/01/2019

AFFILIATION A.E. Stone, Inc.

A.E. Stone, Inc.

1435 Doughty Road **Egg Harbor Twp. NJ 08234**
PHONE: (609) 641 - 2781 **FAX: (609) 641 - 9320**

Lift 1

BULK SPECIFIC GRAVITY OF COMPACTED MIXTURE (JOINT)

ASTM D 2726

CORE NO.	WEIGHT IN AIR	WEIGHT IN WATER	SAT.-SURF. DRY	VOLUME CU.-CM	SPECIFIC GRAVITY G_{mb}
SUBLOT	D	E	E^1	F (E^1 - E)	G D / F
J - 5				0.0	#DIV/0!
J - 6				0.0	#DIV/0!
J - 7				0.0	#DIV/0!
J - 8				0.0	#DIV/0!
RESAMPLE J - 1				0.0	#DIV/0!
RESAMPLE J - 2				0.0	#DIV/0!
RESAMPLE J - 3				0.0	#DIV/0!
RESAMPLE J - 4				0.0	#DIV/0!

CALCULATIONS BY:	DATE
Keith P. Sterling SAT II	4/29/2019 - 05/01/2019

AFFILIATION
A.E. Stone, Inc.

A.E. Stone Inc.
1435 Doughty Road Egg Harbor Twp. NJ 08234
PHONE: (609) 641 - 2781 FAX: (609) 641 - 9320

MAT CORES PERCENT COMPACTION

SUBLOT NO	IN-PLACE BULK SPECIFIC GRAVITY (G_{mbf}) ASTM D 2726 PROCEDURE 9.1	AVERAGE BULK SPECIFIC GRAVITY OF LABORATORY SPECIMENS (G_{mbl})	(G_{mbf}) / (G_{mbl}) X 100
1	#DIV/0!	2.558	#DIV/0!
2	#DIV/0!	2.558	#DIV/0!
3	#DIV/0!	2.558	#DIV/0!
4	#DIV/0!	2.558	#DIV/0!
RESAMPLE 1	#DIV/0!	2.558	#DIV/0!
RESAMPLE 2	#DIV/0!	2.558	#DIV/0!
RESAMPLE 3	#DIV/0!	2.558	#DIV/0!
RESAMPLE 4	#DIV/0!	2.558	#DIV/0!
CALCULATIONS BY: Keith P. Sterling SAT II		DATE: 4/29/2019 - 05/01/2019	
AFFILIATION A.E. Stone, Inc.			

A.E. Stone, Inc.
1435 Doughty Road Egg Harbor Twp. NJ 08234
PHONE: (609) 641 - 2781 FAX: (609) 641 - 9320

JOINT CORES PERCENT COMPACTION

SUBLOT NO	IN-PLACE BULK SPECIFIC GRAVITY (G_{mbf}) ASTM D 2726 PROCEDURE 9.1	AVERAGE BULK SPECIFIC GRAVITY OF LABORATORY SPECIMENS (G_{mbl})	(G_{mbf}) / (G_{mbl}) X 100
J - 5	#DIV/0!	2.558	#DIV/0!
J - 6	#DIV/0!	2.558	#DIV/0!
J - 7	#DIV/0!	2.558	#DIV/0!
J - 8	#DIV/0!	2.558	#DIV/0!
RESAMPLE J-5	#DIV/0!	2.558	#DIV/0!
RESAMPLE J-6	#DIV/0!	2.558	#DIV/0!
RESAMPLE J-7	#DIV/0!	2.558	#DIV/0!
RESAMPLE J-8	#DIV/0!	2.558	#DIV/0!
CALCULATIONS BY: Keith P. Sterling SAT II		DATE: 4/29/2019 - 05/01/2019	
AFFILIATION A.E. Stone, Inc.			

A.E. Stone Inc.

Bituminous Concrete Core
Thickness Evaluation (ASTM D3549)

Client: General Dynamics
Project: FAA National Airport Pavement Test Facility
Reflective Cracking Phase VI Construction
Date: 4/29/2019 - 05/01/2019
By : Keith P. Sterling Quality Control Manager S.A.T.II

0

MAT						JOINT					
Specimen Number	A	B	C	D	AVG	Specimen Number	A	B	C	D	AVG
M - 5					#DIV/0!	J - 5					#DIV/0!
M - 6					#DIV/0!	J - 6					#DIV/0!
M - 7					#DIV/0!	J - 7					#DIV/0!
M - 8					#DIV/0!	J - 8					#DIV/0!
						(LOT RESAMPLE) - (*** EXTRA VERIFICATION)**					
*** M-1B					#DIV/0!	*** J-5					#DIV/0!
*** M-2B					#DIV/0!	*** J-6					#DIV/0!
*** M-3B					#DIV/0!	*** J-7					#DIV/0!
*** M-4B					#DIV/0!	*** J-8					#DIV/0!

PLANT SUMMARY WORKSHEET

Lot No.: 0

Producer : A.E. Stone, Inc.
Location : 1435 Doughty Road
Egg Harbor Twp., NJ 08234-2229
Mixture : P - 401-64S 3/4" Max. Superpave Surface

Client : General Dynamics
Project : FAA National Airport Pavement Test Facility
Reflective Cracking Phase VI Construction
A.I.P No. :

Produced: 4/29/2019 - 05/01/2019
Weather : Cloudy/avg. w/spd. 5.5/mx12
High °F : 55 **Low °F :** 41
Day : X **Night :**

Sp Gr. AC	Gse															
1.039	2.931															
Spec. #	**A/C %**	**Ht. in.**	**Gmm**	**In Air**	**SSD**	**In Water**	**Volume**	**Sp Gr.**	**% Agg.**	**lbs. ft.**	**% Voids**	**VMA %**	**VFA %**	**Stability**	**Corr.**	**Flow**
1-1	5.13	2 1/2		1317.3	1318.3	805.7	512.6	2.570	94.87	160.4	4.1	16.8	75.4	0	0	0.0
1-2	5.13	2 1/2		0.0	0.0	0.0	0.0	#DIV/0!	94.87	#DIV/0!	#DIV/0!	#DIV/0!	#DIV/0!	0	0	0.0
1-3	5.13	2 1/2		0.0	0.0	0.0	0.0	#DIV/0!	94.87	#DIV/0!	#DIV/0!	#DIV/0!	#DIV/0!	0	0	0.0
Average	**5.13**		**2.681**					**#DIV/0!**		**#DIV/0!**	**#DIV/0!**	**#DIV/0!**	**#DIV/0!**	**0**	**0**	**0.0**
Sp Gr. AC	**Gse**															
1.039	2.925															
Spec. #	**A/C %**	**Ht. in.**	**Gmm**	**In Air**	**SSD**	**In Water**	**Volume**	**Sp Gr.**	**% Agg.**	**lbs. ft.**	**% Voids**	**VMA %**	**VFA %**	**Stability**	**Corr.**	**Flow**
2-1	5.10	2 1/2		0.0	0.0	0.0	0.0	#DIV/0!	94.90	#DIV/0!	#DIV/0!	#DIV/0!	#DIV/0!	0	0	0.0
2-2	5.10	2 1/2		0.0	0.0	0.0	0.0	#DIV/0!	94.90	#DIV/0!	#DIV/0!	#DIV/0!	#DIV/0!	0	0	0.0
2-3	5.10	2 1/2		0.0	0.0	0.0	0.0	#DIV/0!	94.90	#DIV/0!	#DIV/0!	#DIV/0!	#DIV/0!	0	0	0.0
Average	**5.10**		**2.677**					**#DIV/0!**		**#DIV/0!**	**#DIV/0!**	**#DIV/0!**	**#DIV/0!**	**0**	**0**	**0.0**
Sp Gr. AC	**Gse**															
1.039	2.933															
Spec. #	**A/C %**	**Ht. in.**	**Gmm**	**In Air**	**SSD**	**In Water**	**Volume**	**Sp Gr.**	**% Agg.**	**lbs. ft.**	**% Voids**	**VMA %**	**VFA %**	**Stability**	**Corr.**	**Flow**
3-1	5.31	2 1/2		0.0	0.0	0.0	0.0	#DIV/0!	94.69	#DIV/0!	#DIV/0!	#DIV/0!	#DIV/0!	0	0	0.0
3-2	5.31	2 9/16		0.0	0.0	0.0	0.0	#DIV/0!	94.69	#DIV/0!	#DIV/0!	#DIV/0!	#DIV/0!	0	0	0.0
3-3	5.31	2 9/16		0.0	0.0	0.0	0.0	#DIV/0!	94.69	#DIV/0!	#DIV/0!	#DIV/0!	#DIV/0!	0	0	0.0
Average	**5.31**		**2.674**					**#DIV/0!**		**#DIV/0!**	**#DIV/0!**	**#DIV/0!**	**#DIV/0!**	**0**	**0**	**0.0**
Sp Gr. AC	**Gse**															
1.039	2.963															
Spec. #	**A/C %**	**Ht. in.**	**Gmm**	**In Air**	**SSD**	**In Water**	**Volume**	**Sp Gr.**	**% Agg.**	**lbs. ft.**	**% Voids**	**VMA %**	**VFA %**	**Stability**	**Corr.**	**Flow**
4-1	5.56	2 1/2		1319.8	1321.1	807.3	513.8	2.569	94.44	160.3	4.4	18.1	75.9	0	0	0.0
4-2	5.56	2 1/2		0.0	0.0	0.0	0.0	#DIV/0!	94.44	#DIV/0!	#DIV/0!	#DIV/0!	#DIV/0!	0	0	0.0
4-3	5.56	2 1/2		0.0	0.0	0.0	0.0	#DIV/0!	94.44	#DIV/0!	#DIV/0!	#DIV/0!	#DIV/0!	0	0	0.0
Average	**5.56**		**2.686**					**#DIV/0!**		**#DIV/0!**	**#DIV/0!**	**#DIV/0!**	**#DIV/0!**	**0**	**0**	**0.0**
Average	***5.18***		***2.677***					***#DIV/0!***		***#DIV/0!***	***#DIV/0!***	***#DIV/0!***	***#DIV/0!***	***0***	***0***	***0.0***

COPIES TO: Resident Engineer
Project Manager
Laboratory Project File

I certify that the above were sampled by me, and that all operations were performed in accordance with FAA ERLPM Specifications and Procedures to the best of my knowledge.

SIGNED: _____
Quality Control Manager S.A.T.II

A.E. Stone Inc.

1435 Doughty Road Egg Harbor Twp. NJ 08234
PHONE: (609) 641 - 2781 FAX: (609) 641 - 0374

FIELD SUMMARY OF COMPACTED MIXTURE

General Dynamics
FAA National Airport Pavement Test Facility
Reflective Cracking Phase VI Construction
A.I.P. Project No. 3-34-0002-092-2015

Date Placed :		**4/29/2019 - 05/01/2019**			
Lot No.		**0**			
Station Ref No.					
Station Ref No.					
Offset Baseline					
Tons =	**125.00**	**Loads =**	**5**	**242**	TPH
Start =	**14:10**	**Finish =**	**18:12**	**4:02**	Hrs.

Mat Cores

Gmbl	Spec. #	In Air	In Water	SSD	Volume	Gmbf	Percent Density
2.558	M - 5	0.0	0.0	0.0	0.0	#DIV/0!	#DIV/0!
	M - 6	0.0	0.0	0.0	0.0	#DIV/0!	#DIV/0!
	M - 7	0.0	0.0	0.0	0.0	#DIV/0!	#DIV/0!
	M - 8	0.0	0.0	0.0	0.0	#DIV/0!	#DIV/0!
						Average	**#DIV/0!**
						Range	**#DIV/0!**
						Std. Dev.	**#DIV/0!**
						Co. of Var.	**#DIV/0!**

Gmbl	Unit Wt.	Lbs.Sq.Yd. in.
2.558	159.6	119.7

Joint Cores

Gmbl	Spec. #	In Air	In Water	SSD	Volume	Gmbf	Percent Density
2.558	J - 5	0.0	0.0	0.0	0.0	#DIV/0!	#DIV/0!
	J - 6	0.0	0.0	0.0	0.0	#DIV/0!	#DIV/0!
	J - 7	0.0	0.0	0.0	0.0	#DIV/0!	#DIV/0!
	J - 8	0.0	0.0	0.0	0.0	#DIV/0!	#DIV/0!
						Average	**#DIV/0!**
						Range	**#DIV/0!**
						Std. Dev.	**#DIV/0!**
						Co. of Var.	**#DIV/0!**

Mat Cores

Gmm	Spec. #	In Air	In Water	SSD	Volume	Gmbf	Percent Air Voids
2.677	M - 5	0.0	0.0	0.0	0.0	#DIV/0!	#DIV/0!
	M - 6	0.0	0.0	0.0	0.0	#DIV/0!	#DIV/0!
	M - 7	0.0	0.0	0.0	0.0	#DIV/0!	#DIV/0!
	M - 8	0.0	0.0	0.0	0.0	#DIV/0!	#DIV/0!
						Average	**#DIV/0!**
						Range	**#DIV/0!**
						Std. Dev.	**#DIV/0!**
						Co. of Var.	**#DIV/0!**

Gmbf	Unit Wt.	Lbs.Sq.Yd. in.
#DIV/0!	#DIV/0!	#DIV/0!

Joint Cores

Gmm	Spec. #	In Air	In Water	SSD	Volume	Gmbf	Percent Air Voids
2.677	J - 5	0.0	0.0	0.0	0.0	#DIV/0!	#DIV/0!
	J - 6	0.0	0.0	0.0	0.0	#DIV/0!	#DIV/0!
	J - 7	0.0	0.0	0.0	0.0	#DIV/0!	#DIV/0!
	J - 8	0.0	0.0	0.0	0.0	#DIV/0!	#DIV/0!
						Average	**#DIV/0!**
						Range	**#DIV/0!**
						Std. Dev.	**#DIV/0!**
						Co. of Var.	**#DIV/0!**

Mat Cores

Spec. #	Thickness	
M - 5	**#DIV/0!**	**#DIV/0!**
M - 6	**#DIV/0!**	**#DIV/0!**
M - 7	**#DIV/0!**	**#DIV/0!**
M - 8	**#DIV/0!**	**#DIV/0!**
Average	**#DIV/0!**	**#DIV/0!**

Joint Cores

Spec. #	Thickness	
J - 5	**#DIV/0!**	**#DIV/0!**
J - 6	**#DIV/0!**	**#DIV/0!**
J - 7	**#DIV/0!**	**#DIV/0!**
J - 8	**#DIV/0!**	**#DIV/0!**
Average	**#DIV/0!**	**#DIV/0!**

TABLE 6. PRICE ADJUSTMENT SCHEDULE

Percentage of Material Within Specification Limits (PWL)	Lot Pay Factor (Percent of Contract Unit Price)
93 - 100	103
90 - 93	PWL + 10
70 - 89	0.125 PWL + 88.75
40 - 69	0.75 PWL + 45
Below 40	Reject[2]

Laboratory Air Voids

Air Void PWL **99%**

Pay Adjustment **90 - 93**

Lot Pay Factor **100**

Field Mat Density

Mat PWL **100%**

Pay Adjustment **103**

Lot Pay Factor **103**

Notes : Sec. 401-8.1 Payment Par A.

a. The lot pay factor shall be the higher of the two values when calulations for both mat density and air voids are 100 percent or higher.

b. The lot pay factor shall be the product of the two values when only one of the calculations for either mat density or air voids is 100 percent or higher.

c. The lot pay factor shall be the lower of the two values when calculations for both mat and air voids are less than 100 percent.

12/29/2016

			Lot - 0	Lot - 0	Lot - 0	Lot - 0	Lot - 0
			A	B	C	D	E
	Bin No.	Material	JMF %	JMF %	JMF %	JMF %	JMF %
	Recycle	Millings	-	-	-	-	-
	7	Birdsboro No. 7	24.0%	24.0%	24.0%	24.0%	24.0%
	6	PTR Douglas No. 9	-	-	-	-	-
	5	Birdsboro No. 8	51.0%	51.0%	51.0%	51.0%	51.0%
	4	Birdsboro No. 57	-	-	-	-	-
	3	R.E. Pierson Conc.S	-	-	-	-	-
	2	Birdsboro No.10 HD	12.3%	12.3%	12.3%	12.3%	12.3%
	1	Birdsboro 467	-	-	-	-	-
	Filler	Martin Lime	6.5%	6.5%	6.5%	6.5%	6.5%
PG 64E-22 WM		Axeon Evotherm M1	6.2%	6.2%	6.2%	6.2%	6.2%
		Total	100.0%	100.0%	100.0%	100.0%	100.0%

12/28/2016

			Test Strip	Test Strip	Test Strip	Test Strip	Test Strip
			Lot - T/S-1	Lot - T/S-2	Lot - T/S	Lot - T/S	Lot - T/S
			A	B	C	D	E
	Bin No.	Material	JMF %	JMF %	JMF %	JMF %	JMF %
	Recycle	Millings	-	-	-	-	-
	7	Birdsboro No. 7	15.0%	16.0%	-	-	-
	6	PTR Douglas No. 9	9.0%	8.0%	-	-	-
	5	Birdsboro No. 8	38.0%	37.0%	-	-	-
	4	Birdsboro No. 57	-	-	-	-	-
	3	R.E. Pierson Conc.S	-	-	-	-	-
	2	Birdsboro No.10 w.plt.	32.8%	33.7%			
	2	Gibraltar Mfg. Sand	-	-	-	-	-
	Filler	Martin Lime	-	-	-	-	-
PG 64S -22		Axeon Marketing	5.2%	5.3%	-	-	-
		Total	100.0%	100.0%	0.0%	0.0%	0.0%

			CMCA-Pro.	CMCA-Pro.	CMCA-Pro.	CMCA-Pro.	CMCA-Pro.
			Lot - 1a	Lot - 1b	Lot - 1c	Lot - 1d	Lot - 1e
			A	B	C	D	E
	Bin No.	Material	JMF %	JMF %	JMF %	JMF %	JMF %
	Recycle	Millings	-	-	-	-	-
	7	Birdsboro No. 7	23.0%	23.0%	23.0%	23.0%	23.0%
	6	Birdsboro No. 9	-	-	-	-	-
	5	Birdsboro No. 8	50.0%	50.0%	50.0%	50.0%	50.0%
	4	Birdsboro No. 57	-	-	-	-	-
	3	R.E. Pierson Conc.S	-	-	-	-	-
	2	Gibraltar Mfg. Sand	13.6%	13.6%	13.6%	13.6%	13.6%
	1	Birdsboro 467	-	-	-	-	-
	Filler	Martin Lime	7.5%	7.5%	7.5%	7.5%	7.5%
PG 64E-22 WM		Axeon Evotherm M1	5.9%	5.9%	5.9%	5.9%	5.9%
		Total	100.0%	100.0%	100.0%	100.0%	100.0%

FIELD DENSITY TEST RESULTS

NUCLEAR DENSITY RESULTS

DATE: 04/30/2019
PROJECT: Reflective Cracking Outdoor Phase I
CONTRACTOR: A.E.Stone
AMBIENT TEMPERATURE (°F): 73.3
GROUND TEMPERATURE (°F): 80.3

MATERIAL: P-401MR PG 64-22
DEPTH: 3 in.
LIFT: 1st Lift

*Density taken after a total of 10 passes**

**4 single roller passes + 2 Double roller passes + 2 single roller passes*

Station	Offset	Maximum Density (%)
01+52.5	4	93.7
01+50	2	94.5
01+27	0	96.2
01+17	0	95.8
01+02	0	95.6
00+95	0	95.1
00+92	0	95.7
00+80	-3	96.1
00+75	2	95.5

Station	Offset	Maximum Density (%)
00+52	-1	95.6
00+50	4	94.6
00+40	1	96.1
00+30	4	96.3
00+27	1	96.4
00+25	0	93.2
00+23	1	96.3
00+20	3	96.4
00+10	-4	96.4

DENSITY ACCEPTANCE TEST RESULTS

Bulk Specific Gravity of Compacted Asphalt
ASTM D2726

National Airport Pavement Test Facility William J.
Hughes Technical Center
Atlantic City International Airport
New Jersey 08405

Project: TO 15 - Outdoor RC Phase 1 **Section:** P-401 PG64-22 Placed 4/30/2019 **Client:** FAA - ATRD

Technician: Matthew Willson **Prof. Engineer:** Matthew Brynick **Date:** 5/7/2019

Lane No.	Sample No.	Thickness (in)	G_{MM}	Dry Mass in Air (grams) [A]	Mass in SSD Condition (grams) [B]	Mass Submerged in Water (grams) [C]	Bulk Specific Gravity [A/(B-C)]	Percent Water Absorbed (%) [(B-A)/(B-C) * 100%]	Air Voids (%)
Lift 1 P-401 PG64-22	TT1-1	2.83	2.676	2,991.1	2,993.7	1,828.7	2.567	0.22	4.0
	TT1-2	3.08	2.676	3,262.7	3,264.9	1,976.7	2.533	0.17	5.3
	TT5-1	2.87	2.676	3,081.5	3,085.8	1,889.2	2.575	0.36	3.7
	TT5-2	2.99	2.676	3,139.9	3,144.7	1,907.4	2.538	0.39	5.2
	TO1-1	2.96	2.676	3,117.9	3,126.5	1,907.8	2.558	0.71	4.4
	TO1-2	3.16	2.676	3,320.2	3,324.3	2,017.0	2.540	0.31	5.1
	TO5-1	3.27	2.676	3,258.5	3,284.1	1,977.9	2.495	1.96	6.8
	TO5-2	3.47	2.676	3,540.5	3,571.3	2,146.2	2.484	2.16	7.1

Remarks: G_{mm} provided by A.E.Stone during production with GDIT inspection.

Samples cored from field by A.E. Stone on 5/3/2019 with GDIT inspection.

Revised: 5/2/2018

P-401MR Loose Mix Verification

Maximum Specific Gravity of Bituminous Paving Mixtures (Bowl in Air Method) ASTM D2041

NextGen Pavement Materials Laboratory
National Airport Pavement Test Facility
William J. Hughes Technical Center
Atlantic City International Airport
New Jersey 08405

Project:	TO15 Outdoor RC Phase 1	**Client:**	FAA
Section:	P-401 PG64-22 Placed 4/30/2019	**Sample Date:**	4/30/2019
Description:	Loose Mix Sample Truck 2	**Test Date:**	5/13/2019
Technician:	Matthew Willson **Prof. Engineer:** Matthew Brynick	**Report Date:**	5/17/2019

Bowl Calibration (Three or more readings must be within 1.0 g)

Bowl with Water at 25°C	Trial 1	Trial 2	Trial 3	Trial 4	Trial 5	Average of Readings within 1.0 g [D]
	7,695.8	7,696.3	7,695.5			7,696.1

Mix ID	Sample No.	Dry Mass in Air (g) [A]	Bowl Mass with Sample and Water Trial 1 (g)	Bowl Mass with Sample and Water Trial 2 (g)	Bowl Mass with Sample and Water Trial 3 (g)	Average Two Readings within 1.0 g [E]	Gmm
ORCP1 Truck 2		2,268.7	9,120.5	9,119.9		9,120.2	2.686

Remarks:

Revised: 5/3/2018

Bulk Specific Gravity of Compacted Asphalt
ASTM D2726

National Airport Pavement Test Facility William J. Hughes
Technical Center
Atlantic City International Airport
New Jersey 08405

Project: TO15 Outdoor RC Phase 1 **Sampled Date:** 4/30/2019

Section: P-401 PG64-22 Placed 4/30/2019, Loose Mix Truck 2 **Test Date:** 5/16/2019

Technician: Matthew Willson **Prof. Engineer:** Matthew Brynick **Report Date:** 5/17/2019

Lane No.	Sample No.	GMM	Dry Mass in Air, g [A]	Mass in SSD Condition, g [B]	Mass Submerged in Water, g [C]	Bulk Specific Gravity [A/(B-C)]	Percent Water Absorbed, % [(B-A)/(B-C) * 100%]	Air Voids, %
ORCP1 Truck 2	Loose Mix	2.685	5,077.7	5,084.3	3,097.6	2.556	0.33	4.8

Remarks:

Revised: 5/17/2019

Mechanical Size Analysis of Extracted Aggregate
ASTM D5444

NextGen Pavement Materials Laboratory
National Airport Pavement Test Facility
William J. Hughes Technical Center
Atlantic City International Airport
New Jersey 08405

Project: TO 15 Outdoor RC Phase 1 **Sample Date:** 4/30/2019
Section: P-401 PG64-22 Placed 4/30/2019 **Test Date:** 5/14/2019
Description: Loose Mix Sample **Report Date:** 5/17/2019
Sample No: Truck 2 **Procedure:**
Technician: Matthew Willson **Prof. Engineer:** Matthew Brynick

Pan No: 1 **Pan Mass (g):** 918.4
Oven Dry + Pan Mass (g): 2,812.6 **Washed + Pan Mass (g):** 2,741.3
Original Sample Oven Dry Mass (g): 1,894.2 **Washed Mass (g):** 1,822.9

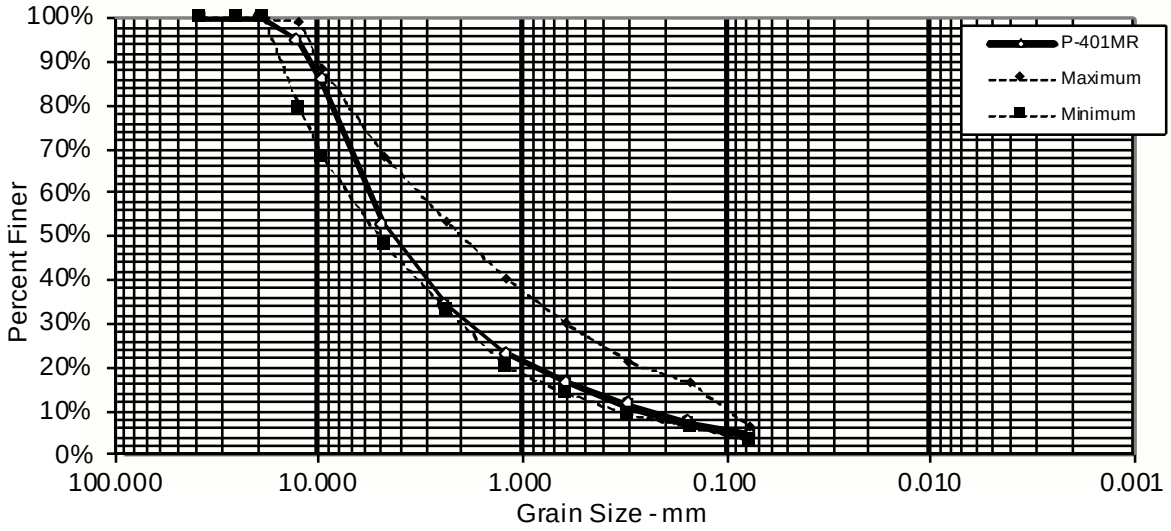

Sieve Size (US inches)	Opening Size (mm)	Retained Mass (g)	Cumulative Mass (g)	Individual Percent Retained	Cumulative Percent Retained	Percent Passing	P-154MR Spec. Percent	
							Max.	Min.
1.5	37.5		0.0	0.0%	0.0%	100.0%	100%	100%
1	25		0.0	0.0%	0.0%	100.0%	100%	100%
0.75	19	0	0.0	0.0%	0.0%	100.0%	100%	100%
0.5	12.5	101.4	101.4	5.4%	5.4%	94.6%	99%	79%
0.375	9.5	177	278.4	9.3%	14.7%	85.3%	88%	68%
No.4	4.75	623.3	901.7	32.9%	47.6%	52.4%	68%	48%
No. 8	2.36	348	1249.7	18.4%	66.0%	34.0%	53%	33%
No.16	1.18	213.4	1463.1	11.3%	77.2%	22.8%	40%	20%
No. 30	0.6	126.4	1589.5	6.7%	83.9%	16.1%	30%	14%
No. 50	0.3	96.5	1686.0	5.1%	89.0%	11.0%	21%	9%
No. 100	0.150	75.8	1761.8	4.0%	93.0%	7.0%	16%	6%
No. 200	0.075	49.5	1811.3	2.6%	95.6%	4.4%	6%	3%
PAN		10.1	1821.4	0.5%	96.2%	3.8%	0.0%	0.0%

Percent Loss by Washing: **3.8%**
Percent Loss of Sieved Material: **0.08%**

Remarks:

Revised: 5/17/2019

Asphalt Content of Hot-Mix by Ignition Method
ASTM D6307

NextGen Pavement Materials Laboratory
National Airport Pavement Test Facility
William J. Hughes Technical Center
Atlantic City International Airport
New Jersey 08405

Project: TO15 Outdoor RC Phase 1 **Sample Date:** 4/30/2019

Section: P-401 PG64-22 Placed 4/30/2019, Loose Mix Truck 2 **Test Date:** 5/13/2019

Technician Matthew Willson **Prof. Engineer:** Matthew Brynick **Report Date:** 5/17/2019

Sample No.	Station & Offset	Mass of Empty Basket, g	Basket + Sample Before Ignition, g	Basket + Sample After Ignition, g	Mass Before Ignition, g [M_B]	Mass After Ignition, g [M_A]	Calibration Factor, % [C_F]	Asphalt Content from oven, %	Asphalt Content by calculation, %
ORCP1 Truck 2	Loose Mix	3,004.9	5,012.2	4,901.3	2,007.3	1,896.4	0.18	5.52	5.34

Revised: 2/5/2019

3D Leica Scan

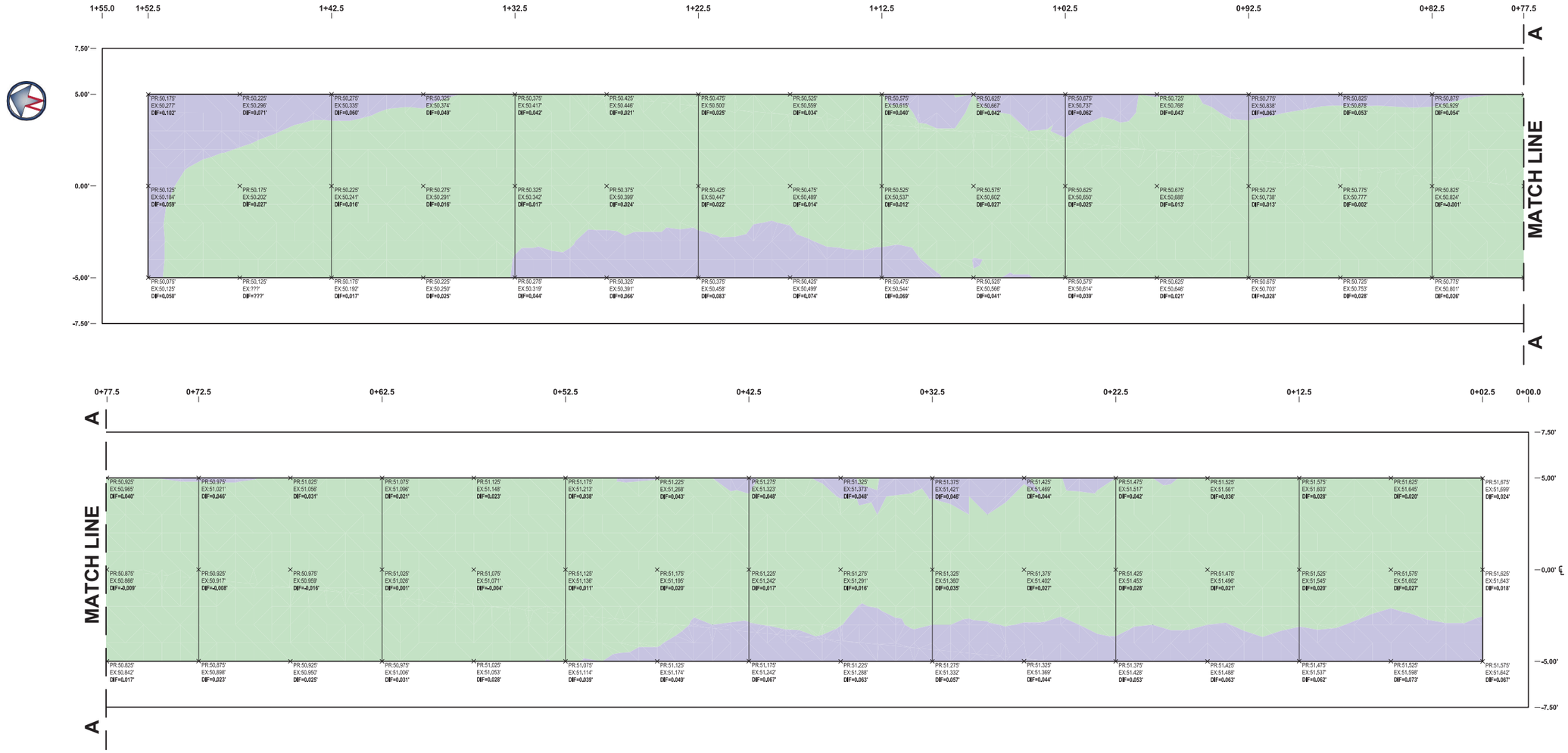

PLAN VIEW

SCALE: 1"=3'

3' 2' 1' 0 3' 6' 9'

GRAPHIC SCALE

1" = 3'

CUT (+) AND FILL (-) SUMMARY TABLE

ID	COLOR	MIN. [FT]	MAX. [FT]	AREA [SQ. FT]
1		-0.016	0.042	1269.23
2		0.042	0.102	230.78

LEGEND:

x - SPOT ELEVATION

PR - PROPOSED ELEVATION

EX - EXISTING ELEVATION

DIF - DIFFERENCE IN ELEVATION

GRADE TOLERANCE: ± 0.042' (½")

CONFORMING ELEVATION

ELEVATION BELOW THE CONFORMANCE RANGE

ELEVATION ABOVE THE CONFORMANCE RANGE

NO.	REVISIONS	DATE	BY	CHK	APR

RODRIGUEZ CONSULTING, LLC
1301 N 2ND STREET
PHILADELPHIA, PA 19122
PHONE: (215) 839-8087

GENERAL DYNAMICS
Information Technology
200 DECADON DRIVE
EGG HARBOR TOWNSHIP
NEW JERSEY 08234
PHONE: (609) 677-8543

FOR

NATIONAL AIRPORT PAVEMENT TEST FACILITY
ATLANTIC CITY AIRPORT
NEW JERSEY 08234

	NAME	DATE
DRAWN	M. MAZUREK	05/01/2019
CHECKED	H.Y. / K.H.	
FAA APPROVAL DATE:		
PROJECT NO:		

REFLECTIVE CRACKING OUTDOOR

PHASE I

P-401 ELEVATION MAP

SIZE: ANSI D | SCALE: 1"=3' | SHEET 1 OF 1

CAD FILE: REFL-CRACK-OUT1-CONF.DWG

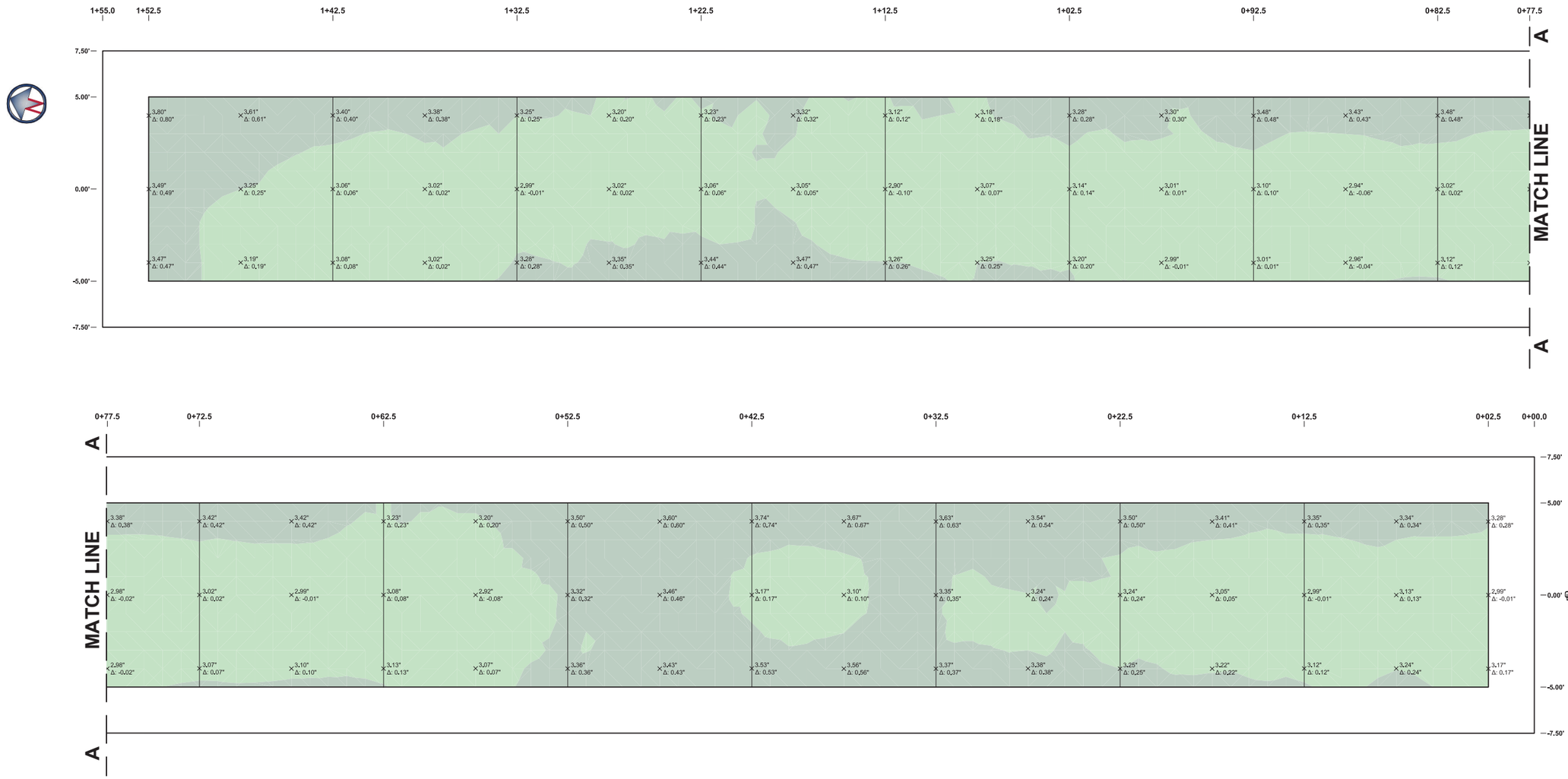

PLAN VIEW

SCALE: 1"=3'

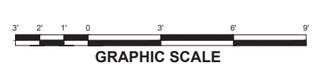

GRAPHIC SCALE

1" = 3'

THICKNESS MAP LEGEND				
ID	MIN. THICKNESS [FT]	MAX. ELEVATION [FT]	AREA [SQ. FT]	COLOR
1	0.235'	0.271'	954.47	
2	0.271'	0.336'	545.53	

LEGEND:

x - THICKNESS LABEL

TARGET THICKNESS: 3" (0.250')

THICKNESS TOLERANCE: DEFICIENCY SHALL NOT BE MORE THAN $\frac{1}{4}$" (0.021')

CONFORMING THICKNESS 2.75" - 3.25" (0.229'-0.271')

CONFORMING THICKNESS >3.25" (0.271')

THICKNESS BELOW THE CONFORMANCE RANGE <2.75" (0.229')

NO.	REVISIONS	DATE	BY	CHK	APR

RODRIGUEZ CONSULTING, LLC
1301 N 2ND STREET
PHILADELPHIA, PA 19122
PHONE: (215) 839-8087

GENERAL DYNAMICS
Information Technology
200 DECADON DRIVE
EGG HARBOR TOWNSHIP
NEW JERSEY 08234
PHONE: (609) 677-8543

FOR

NATIONAL AIRPORT PAVEMENT TEST FACILITY
ATLANTIC CITY AIRPORT
NEW JERSEY 08234

	NAME	DATE
DRAWN	M. MAZUREK	05/01/2019
CHECKED	H.Y. / K.H.	
FAA APPROVAL DATE:		
PROJECT NO:		

REFLECTIVE CRACKING OUTDOOR

PHASE I

P-401 THICKNESS MAP

SIZE: ANSI D | SCALE: 1"=3' | SHEET 1 OF 1

CAD FILE: REFL-CRACK-OUT1-CONF.DWG

P-401MR LAYER DISTRESS MAP (AFTER CONSTRUCTION)

COLOR	DATE	INTIALS	TOTAL PASSES
	5/13/2019	ZW	0

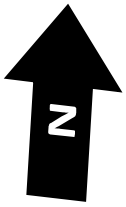

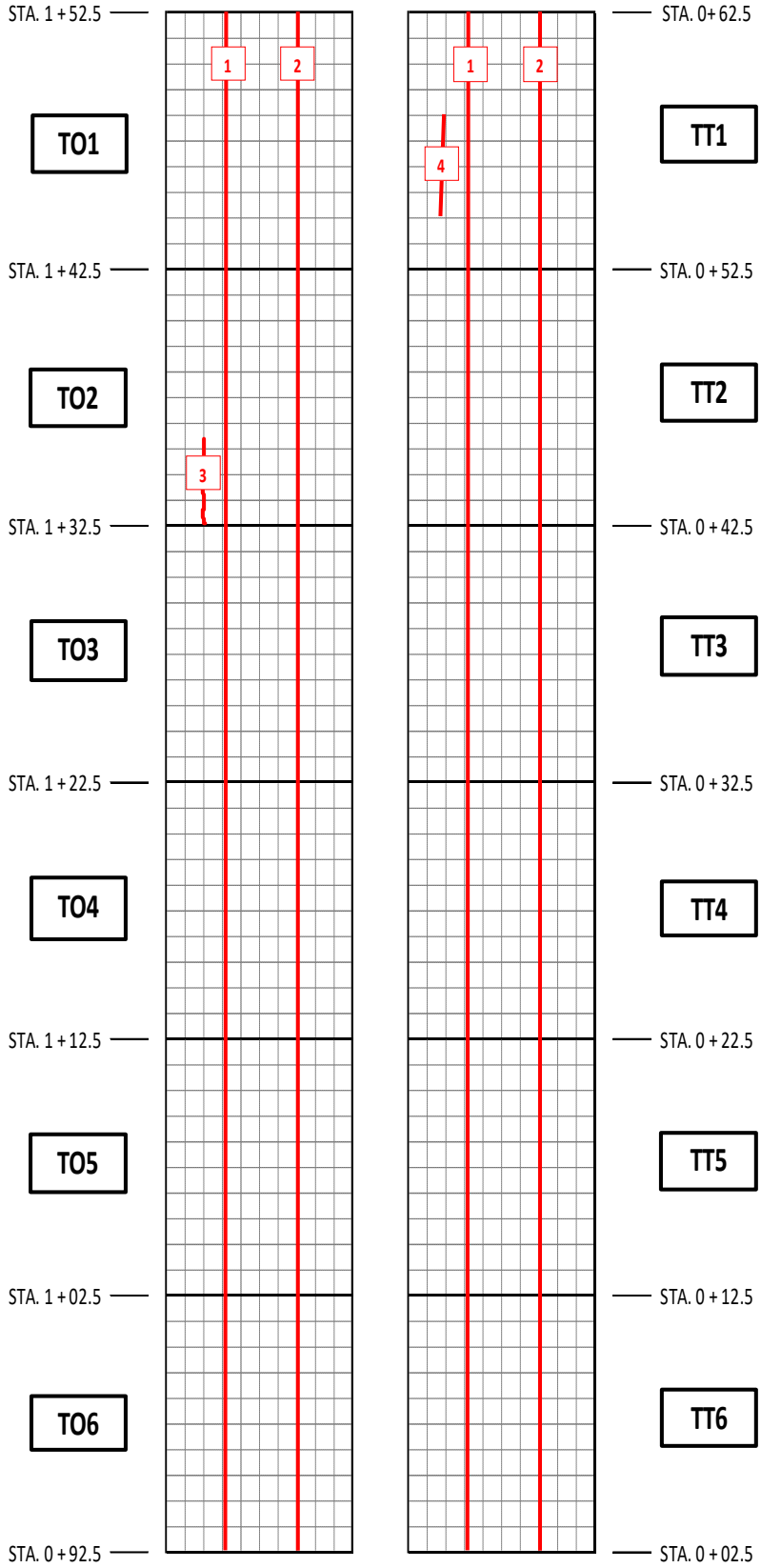

P-401MR LAYER DISTRESS LOG (AFTER CONSTRUCTION)

DATE	TOTAL PASSES		DAILY PASSES	DISTRESS							NOTES
				DESCRIPTION	NO.	LOCATION					
						X AXIS (in.)		Y AXIS (in.)		SLAB	
	NORTH	SOUTH				South	North	EAST	WEST		
5/13/2019	0	0	0	Segregation	1	0	120	79	79	TO1	Longitudinal segregation of asphalt mixtures induced by construction.
5/13/2019	0	0	0	Segregation	1	0	120	79	79	TO2	
5/13/2019	0	0	0	Segregation	1	0	120	79	79	TO3	
5/13/2019	0	0	0	Segregation	1	0	120	79	79	TO4	
5/13/2019	0	0	0	Segregation	1	0	120	79	79	TO5	
5/13/2019	0	0	0	Segregation	1	0	120	79	79	TO6	
5/13/2019	0	0	0	Segregation	1	0	120	79	79	TT1	
5/13/2019	0	0	0	Segregation	1	0	120	79	79	TT2	
5/13/2019	0	0	0	Segregation	1	0	120	79	79	TT3	
5/13/2019	0	0	0	Segregation	1	0	120	79	79	TT4	
5/13/2019	0	0	0	Segregation	1	0	120	79	79	TT5	
5/13/2019	0	0	0	Segregation	1	0	120	79	79	TT6	
5/13/2019	0	0	0	Segregation	2	0	120	35	35	TO1	
5/13/2019	0	0	0	Segregation	2	0	120	35	35	TO2	
5/13/2019	0	0	0	Segregation	2	0	120	35	35	TO3	
5/13/2019	0	0	0	Segregation	2	0	120	35	35	TO4	
5/13/2019	0	0	0	Segregation	2	0	120	35	35	TO5	
5/13/2019	0	0	0	Segregation	2	0	120	35	35	TO6	
5/13/2019	0	0	0	Segregation	2	0	120	35	35	TT1	
5/13/2019	0	0	0	Segregation	2	0	120	35	35	TT2	
5/13/2019	0	0	0	Segregation	2	0	120	35	35	TT3	
5/13/2019	0	0	0	Segregation	2	0	120	35	35	TT4	
5/13/2019	0	0	0	Segregation	2	0	120	35	35	TT5	
5/13/2019	0	0	0	Segregation	2	0	120	35	35	TT6	
5/13/2019	0	0	0	Segregation	3	0	41	96	96	TO3	
5/13/2019	0	0	0	Segregation	4	24	84	96	99	TT1	

APPENDIX M

Cut Sheets

	NATIONAL AIRPORT PAVEMENT TEST FACILITY TRANSMITTAL OF SHOP DRAWINGS, EQUIPMENT DATA, MATERIAL SAMPLES, OR MANUFACTURER'S CERTIFICATES OF COMPLIANCE	**National Airport Pavement Test Facility** **William J. Hughes Technical Center** **Atlantic City International Airport** **New Jersey 08405**

Task Order:			**Date Submitted:**	
Project Name:			**Specification No.:**	
Transmittal Description:			**Source:**	
Transmittal Purpose:			**Transmittal Type:**	

Item No.:	**Description:**	**Variation:**	**Contractor Recommendation:**

Contractor Remarks:

1	
2	
3	
4	
5	
6	
7	
8	
9	
10	

Contractor Approval Actions:

Janine Abyad	
Contractor Name & Signature	***Date***

FAA Review Action Codes:

		"A" - Approved as Submitted; Completed	**FAA Approval Actions:**	
		"B" - Approved, except as noted on drawings; Completed		
		"C" - Approved, resubmission required		
		"D" - Returned by Correspondence; Completed		
		"E" - Disapproved (see attached); Resubmit		
		"F" - Receipt Acknowledged; Completed		
		"G" - Other (Specify); Resubmit		
		"X" - Receipt Acknowledged, does not comply; Resubmit	***FAA Name & Signature***	***Date***

Additional FAA Comments:

1	
2	
3	
4	
5	

Dowels will be placed at mid-height of 9" slabs.

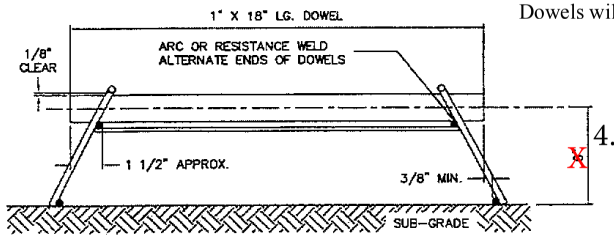

SECTION: A-A'

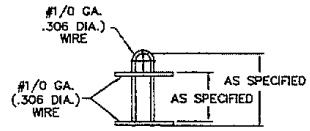

DETAIL: U-LEG

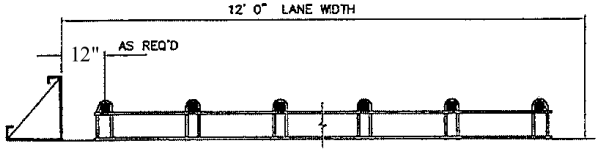

SECTION: B-B'

WILL CUT TO FIT
10' LANE WIDTH

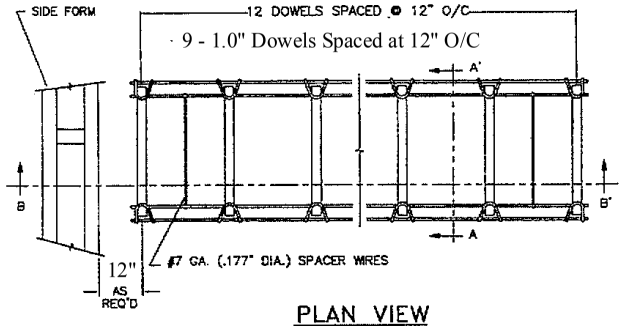

PLAN VIEW

NOTES:

1) DOWELS TO BE BILLET STEEL BARS PER AASHTO SPECIFICATION M-31 GR. 60 LATEST REV. (ASTM A-615 GR. 60)
2) BASKETS ARE TO BE:
   - ☒ PLAIN
   - ☐ RED OXIDE SSPC-25
   - ☐ TECTYL 6116D/6116DS
   - ☐ EPOXY COATED ASTM A1078
   - ☐ PATCHED ENDS
3) DOWELS ARE TO BE:
   - ☒ PLAIN
   - ☐ RED OXIDE SSPC-25
   - ☐ ~~TECTYL 6116D/6116DS~~
   - ☐ EPOXY COATED ASTM A775
   - ☐ PATCHED ENDS
4) DOWELS ARE TO BE SAW CUT AND DEBURRED.
5) WIRE SIZES SHOWN ARE MINIMUM REQ'D.
6) ALL WIRE INTERSECTIONS ARE TO BE RESISTANCE WELDED.
7) WIRE TENSILE STRENGTH IS TO BE 50,000 PSI MINIMUM.
8) TOLERANCES:
   - A) ±1/4" UNLESS OTHERWISE SPECIFIED.
   - B) CENTERLINE OF INDIVIDUAL DOWELS SHALL BE PARALLEL TO SUBGRADE AND ALL OTHER DOWELS IN ASSEMBLY WITHIN ±1/4".

FILED: \APP ENG\AHT\BASKET\BHB8213

DAYTON SUPERIOR
1125 BYERS RD – DAYTON, OH 45342
PHONE NO. 1-800-745-3700 – FAX NO. (937) 865-9182

ITEM	WELDED DOWEL ASSEMBLY (WDA) CONTRACTION TYPE	
PROJECT	Reflective Cracking (Outdoor)	
LOCATION	NAPMRC	
ACCOUNT		
SCALE	NOT TO SCALE	DRAWING NO.
DRAWN	BRAD PHILLIPS	BHB-8213
DATE	9-21-16	SHEET 1 OF 1

	NATIONAL AIRPORT PAVEMENT TEST FACILITY TRANSMITTAL OF SHOP DRAWINGS, EQUIPMENT DATA, MATERIAL SAMPLES, OR MANUFACTURER'S CERTIFICATES OF COMPLIANCE	**National Airport Pavement Test Facility** **William J. Hughes Technical Center** **Atlantic City International Airport** **New Jersey 08405**

Task Order:			**Date Submitted:**	
Project Name:			**Specification No.:**	
Transmittal Description:			**Source:**	
Transmittal Purpose:			**Transmittal Type:**	

Item No.:	**Description:**	**Variation:**	**Contractor Recommendation:**

Contractor Remarks:

1	
2	
3	
4	
5	
6	
7	
8	
9	
10	

Contractor Approval Actions:

Janine Abyad	
Contractor Name & Signature	***Date***

FAA Review Action Codes:

		"A" - Approved as Submitted; Completed	**FAA Approval Actions:**	
		"B" - Approved, except as noted on drawings; Completed		
		"C" - Approved, resubmission required		
		"D" - Returned by Correspondence; Completed		
		"E" - Disapproved (see attached); Resubmit		
		"F" - Receipt Acknowledged; Completed		
		"G" - Other (Specify); Resubmit		
		"X" - Receipt Acknowledged, does not comply; Resubmit	***FAA Name & Signature***	***Date***

Additional FAA Comments:

1	
2	
3	
4	
5	

Glendora, California
Toll-Free: 800.735.5566
Phone: 909.592.6272
Fax: 909.592.7971

Roscommon, Ireland
Phone: 35.39.03.25922
Fax: 35.39.03.25921

H Series H1730

Heavy Duty

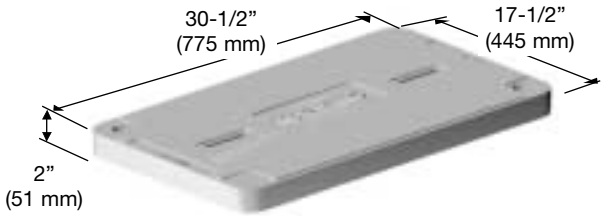

Cover[1]

Material: Polymer Concrete
Weight: 75.0 lbs. (34 kgs)
Model: H1730-P1
Skid Resistant Surface[2]
(Material and cover dimensions compliant with WUC, Guide 3.6[3])

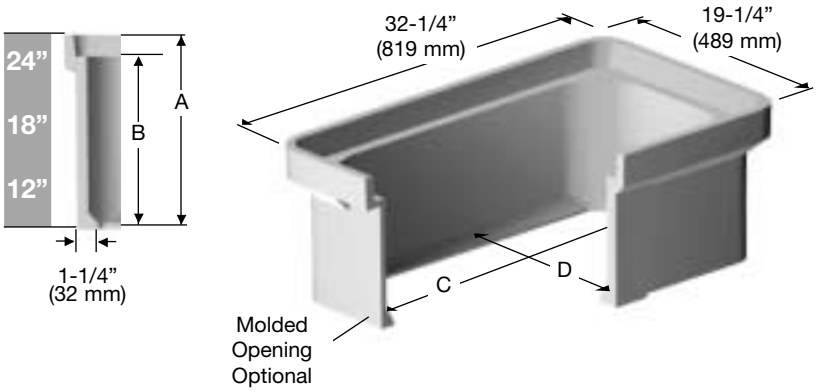

Bodies (12", 18", 24")

Material: Polymer Concrete

Model: H1730-12 (65 lbs./29.4 kgs)
A 12" (305 mm) B 10" (254 mm)
C 28 5/16" (720 mm) D 15 5/16" (390 mm)

Model: H1730-18 (92 lbs./41.7 kgs)
A 18" (457 mm) B 16" (406 mm)
C 28 3/16" (716 mm) D 15 3/16" (386 mm)

Model: H1730-24 (117 lbs./53.0 kgs)
A 24" (610 mm) B 22" (559 mm)
C 28 1/16" (712 mm) D 15 1/16" (382 mm)

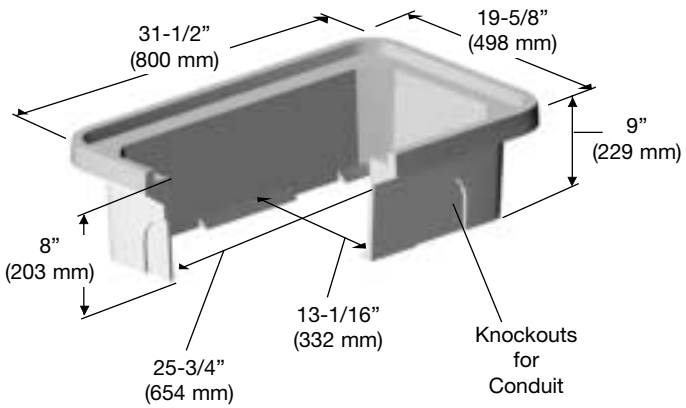

Not Using Bottom Extension

Bottom Extension

Material: Polymer Concrete
Model: H1730-9X (45 lbs./20 kgs)

Tolerances

Cover ±1/8" (3 mm); Body ±1/8" (3 mm)
Foot ±1/16" (2 mm); Height ±1/4" (6 mm)

Fasteners: 2 each (optional 4 ea) 3/8-16 UNC, Stainless Steel, Hex Head with Washer; Options: Captive bolt and floating nut, size, quantity, type head are available.
Cover Identification is blank unless specified
Pull Slot 1/2" x 4" (13 mm x 102 mm)
Steel Covers Optional

Boxes are stackable. 24" deep shall be used as the lower box only. Vertical load ratings are stated for single boxes.
For units with MOLDED OPENINGS, subtract 2 lbs from Unit Weight.
Weights may vary slightly. Dimensions in inches with metric equivalents.

Revision Date 4/2003

H Series H1730

Heavy Duty

Carson Industries, LLC

Glendora, California
Toll-Free: 800.735.5566
Phone: 909.592.6272
Fax: 909.592.7971

Roscommon, Ireland
Phone: 35.39.03.25922
Fax: 35.39.03.25921

Vertical and Lateral Load Rating

Heavy Duty Covers

- Compliant with AASHTO, Design Load of H-10; ASTM C 857-95, Design Load of A-8, 8,000 lbs. Capable of withstanding a Static Load of >22,880 lbf transferred through a 10” x 10” steel plate centered on the cover and body.
- Compliant with AASHTO, Design Load of H-20; ASTM C 857-95, Design Load of A-16, 16,000 lbs. Capable of withstanding a Static Load of >45,760 lbf transferred through a 10” x 20” steel plate centered on the cover and body.
- This product is designed to withstand H-10 and H-20 loading in incidental or non-deliberate traffic areas. Not intended to be installed in roadways.

Shipping Configuration

- **Single Bodies – 12”:**
  Unit, 12 assemblies, = 69.5 cu. ft.; 1,680.0 lbs.
- **Single Bodies – 18”:**
  Unit, 6 assemblies, = 53.8 cu. ft.; 1,002.0 lbs.
- **Single Bodies – 24”:**
  Unit, 6 assemblies, = 69.5 cu. ft.; 1,152.0 lbs.

Standard Test Method	Properties of Raw Material	ASTM Designation	Test Results
Compressive Strength of Polymer Concretes	Compressive Strength	C 579-96	11,000 psi
Flexural Strength and Modulus of Elasticity of Polymer Concretes	Flexural Strength Modulus of Elasticity	C 580-93	1,800 psi 2,900,000 psi
Chemical Resistance of Polymer Concretes	Chemical Resistance	C 267-97	Pass[4]
Determination of Impact Resistance by means of a Tup (falling weight)	Impact Resistance	D 2444-93	Pass[5]

[1]AASHTO H-10, ASTM C 857, A-8, 8,000 lbs Design Load. Static Vertical Load Rating >22,880 lbf. AASHTO H-20, ASTM C 857 A-16, 16,000 lbs Design Load. Static Vertical Load Rating > 45,760 lbf
[2]Coefficient of Friction (ASTM C1028) >0.5
[3]Western Underground Committee, Guide 3.6
[4]Specimens exposed to ten reagents (alkalis, acids and petroleum distillates) experience <2% weight and dimensional change and retain >75% of average Compressive Strength. Listing of reagents and test reports available upon request.
[5]Capable of withstanding 70 ft lbs impact with a type “C” Tup.

Shipping Information

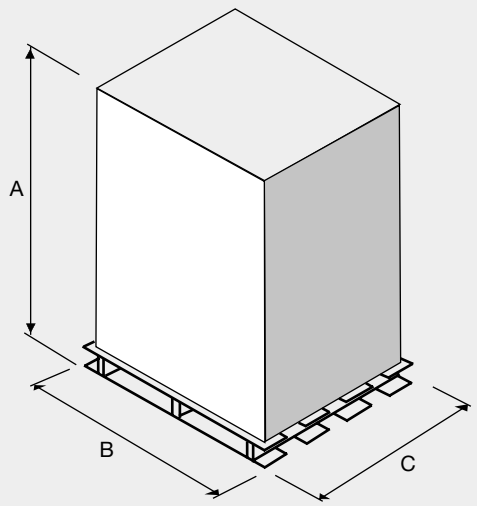

UNIT 1730-15

Dim.	Description	Value
A	Height	54”
B	Length	42”
C	Width	54”

Units: 12 per pallet
Weight: 1,725 lbs. per pallet

UNIT 1730-18

Dim.	Description	Value
A	Height	42”
B	Length	42”
C	Width	54”

Units: 9 per pallet
Weight: 1,047 lbs. per pallet

UNIT 1730-24

Dim.	Description	Value
A	Height	54”
B	Length	42”
C	Width	54”

Units: 6 per pallet
Weight: 1,197 lbs. per pallet

BODY 1730-15

Dim.	Description	Value
A	Height	58”
B	Length	42”
C	Width	54”

Units: 15 per pallet
Weight: 1,020 lbs. per pallet

BODY 1730-18

Dim.	Description	Value
A	Height	56”
B	Length	42”
C	Width	54”

Units: 9 per pallet
Weight: 873 lbs. per pallet

BODY 1730-24

Dim.	Description	Value
A	Height	52”
B	Length	42”
C	Width	54”

Units: 6 per pallet
Weight: 747 lbs. per pallet

COVER

Dim.	Description	Value
A	Height	36”
B	Length	42”
C	Width	48”

Units: 145 per pallet
Weight: 3,420 lbs. per pallet

BOTTOM EXTENSION

Dim.	Description	Value
A	Height	47”
B	Length	42”
C	Width	48”

Units: 15 per pallet
Weight: 720 lbs. per pallet

All information contained in this brochure was current at the time of printing. Because of Carson Industries’ policy of ongoing research and development, the Company reserves the right to discontinue or update product information without notice.

Quazite®

To Select the Enclosure You Need for Your Application:

1 ..... Determine UL Requirements
2 ..... Determine Load Ratings
3 ..... Determine Handhole Opening Size
4 .... Select Cover Series & Style
5 ..... Select Box Style
6 ..... Determine Options & Hardware

Enclosure Selection Guide

4 Cover Series & Styles

CA/WA/CG Series Covers

CA covers are designed to bolt down. WA covers do not have provisions to bolt the covers in place. CG covers feature a grommet package to reduce incoming fluids into the enclosure. CG covers must be used with gasketed boxes.

- Design Load: 8,000 lbs. over a 10" square with a minimum test load of 12,000 lbs. (ANSI Tier 8)
  (For PG, PT, PR and smaller PC styles)
- Design Load: 5,000 lbs. over a 10" square with a minimum test load of 7,500 lbs. (ANSI Tier 5)
  (For PC 13" x 24" and PC 17" x 30" styles and all LG styles)

HA/HG Series Covers

Heavy duty covers (available for PG, PD, PC and PR box styles) are designed for driveways, parking lots and off-roadway applications where subject to occasional non-deliberate vehicular traffic. HG covers feature a grommet package to reduce incoming fluids into the enclosure. HG covers must be used with gasketed boxes.

- Design Load: 15,000 lbs. over a 10" square with a minimum test load of 22,500 lbs. (ANSI Tier 15)

HH Series Covers

Extra heavy duty HH covers are designed for driveways, parking lots and off-roadway applications where subject to occasional non-deliberate traffic by heavy vehicles. Contact your local QUAZITE® representative for availability of sizes.

- Loadings for HH covers comply with all test provisions of ANSI/SCTE 77 except that the vertical design load is 22,500 lbs. with a test load of 33,750 lbs. over a 10" x 20" plate.

Cover Load Rating

QUAZITE® Cover Performance Chart (Wheel Loads)*

Cover Style	Cover Series	Design (lbs.)	Test Load (lbs.)	Test Area	ANSI Tier
LG	CA/WA	5,000	7,500	10" x 10"	5
PC1324 & PC1730	CA/WA	5,000	7,500	10" x 10"	5
PC all other sizes	CA/WA	8,000	12,000	10" x 10"	8
PG/PT	CA/WA	8,000	12,000	10" x 10"	8
PC	HA	15,000	22,500	10" x 10"	15
PG/PT	HA	15,000	22,500	10" x 10"	15
PG	HH	22,500	33,750	10" x 20"	22
PR	CA/WA	8,000	12,000	10" x 10"	8
PR	HA	15,000	22,500	10" x 10"	15

* Not all products are UL Listed. For specific UL Listed products, please refer to individual drawings.

Cover Numbering System

Cover Style	Cover Size	Cover Series	Cover Variation	Cover Logo #	Bolt Option
PC	**1730**	**CA**	**00**	**09**	**P**
PC PG PR PT LG	(width x length) example: 17" x 30"	CA-standard cover HA-heavy duty cover WA-standard/no bolts CG-standard cover w/gasket HG-heavy duty cover w/gasket CS-split cover HS-heavy duty split cover CT-torsion assist cover HH-extra heavy duty CC-overlapping cover HC-heavy duty overlapping cover	Standard Cover - No Variation Contact your local QUAZITE® representative for more information on cover variations.	09 - Blank (See chart on next page for a listing of commonly used cover logos)	Penta-head (Hex head bolts standard, no designation needed)

Highlighted areas indicate UL Listing

HUBBELL LENOIR CITY, INC.

To Select the Enclosure You Need for Your Application:

1 .....Determine UL Requirements
2 .....Determine Load Ratings
3 .....Determine Handhole Opening Size
4 .....Select Cover Series & Style
5 .... Select Box Style
6 .....Determine Options & Hardware

Quazite®

Enclosure Selection Guide

5 Box Styles

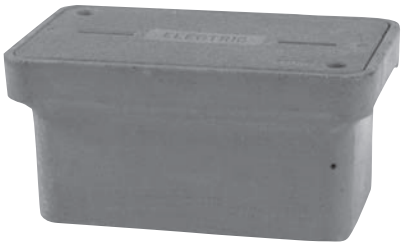

PG/LG Style

For use as a splice box, pull box, equipment enclosure or for any application requiring easy access to an underground service. Stackable for increased depth. Straight sides for easy adjustment of box to grade.

- Available in sizes:

11" x 18"	24" x 24"	30" x 60"	36" x 72"	48" x 96"
13" x 24"	24" x 36"	36" x 36"	48" x 48"	
17" x 30"	30" x 48"	36" x 60"	48" x 72"	

- Loadings comply with ANSI/SCTE 77. These boxes, with a design load of 22,500 lbs. and a test load of 33,750 lbs., meet and exceed ANSI Tier 15 test provisions.
- 12" - 48" depths
- LG style is 32% lighter in weight as compared to the PG box.

PD/LD Style

Enclosures with 1° (degree) flare for maximum strength. Flared design optimizes internal volume and prevents frost heave.

- Available in sizes:
  17" x 30" x 18", 17" x 30" x 26", 24" x 36" x 18", 24" x 36" x 26", 24" x 36" x 48", 30" x 48" x 24", 30" x 48" x 48"
- Design load: 15,000 lbs. Test load: 22,500 lbs. (ANSI Tier 15)

Box Numbering System

QUAZITE® products are referred to by an identifying part number. An example of the numbering system is shown below to help you understand how to identify the product you need for your application. Contact your local QUAZITE® representative if you have any questions.

Box Style	*Nominal Size*	*Box Variation*	*Box Depth*
PC	**1730** (width x length) example: 17" x 30"	**BA**	**12** 12" deep

PC	PT
PG	LX
PR	LR
PD	

BA-box w/open bottom	DG- gasketed box w/solid bottom
BB-box w/mouse holes	JA-footed box
BC-divided box	EA-extension
BG-gasketed box w/open bottom	RA-solid base extension
DA-box w/solid bottom	

Highlighted areas indicate UL Listing

HUBBELL LENOIR CITY, INC.

SPECIFICATIONS/DATA

6” x 8” PC Style (Stackable) Assembly

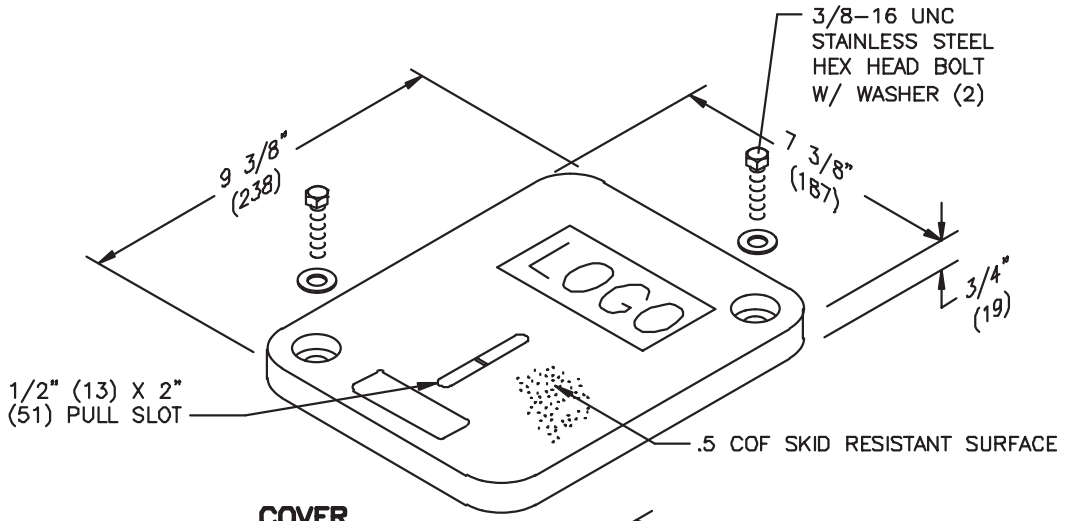

COVER

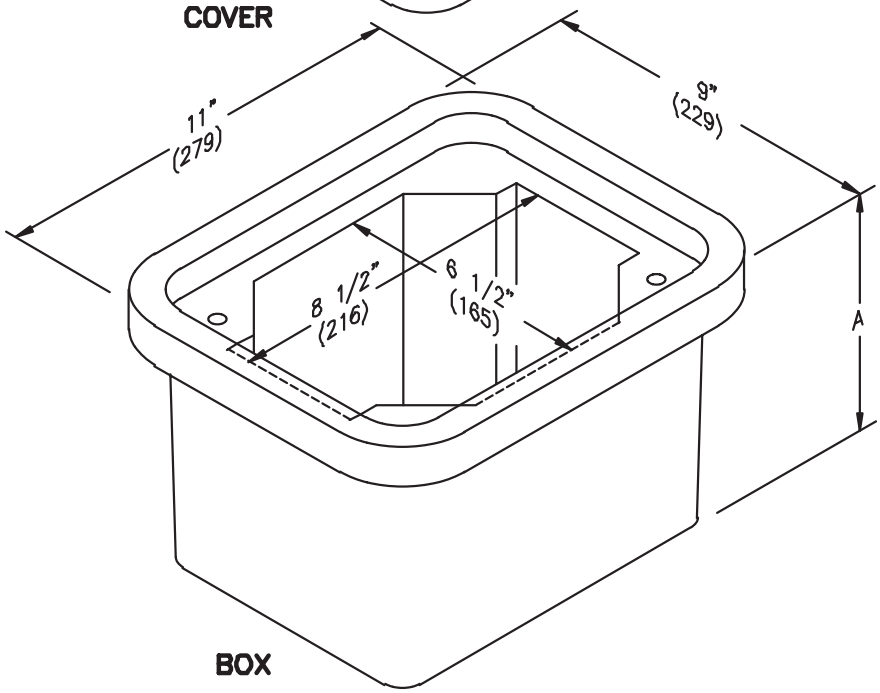

BOX

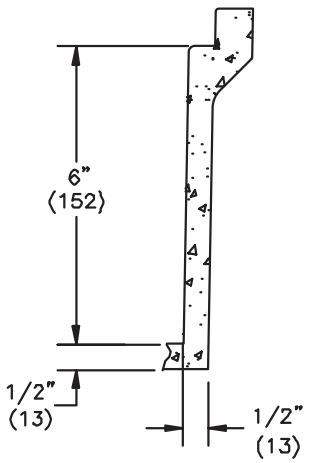

Covers (Blank unless logo is specified)

DESCRIPTION	PART NO.	WEIGHT #	DESIGN/TEST LOAD #	ANSI TIER
W/2 Bolts	PC0608HA00	4 (1.8 kg)	15,000 / 22,500	15
Gasketed w/4 Bolts	PC0608HG00	4 (1.8 kg)	15,000 / 22,500	15

- Gasketed covers and bolt grommets must be used with a gasketed box. Gaskets reduce the inflow of fluids but do not make the enclosure water tight.

Boxes (Stackable with self-aligning, replaceable EZ-Nut)

DESCRIPTION	PART NO.	WEIGHT #	DIMENSION A	DESIGN/TEST LOAD #	ANSI TIER
Open Bottom	PC0608BA06	14 (6.4 kg)	6 3/4” (171 mm)	15,000 / 22,500	15
Open Bottom w/Gasket	PC0608BG06	14 (6.4 kg)	6 3/4” (171 mm)	15,000 / 22,500	15
Solid Bottom	PC0608DA06	15 (6.8 kg)	7 1/4” (184 mm)	15,000 / 22,500	15
Solid Bottom w/Gasket	PC0608DG06	15 (6.8 kg)	7 1/4” (184 mm)	15,000 / 22,500	15

Dimensions & weights in parentheses are metric equivalent.

SPECIFICATIONS/DATA

11” x 18” PG Style (Stackable) Assembly

Covers (Blank unless logo is specified)

DESCRIPTION	PART NO.	WEIGHT #	DESIGN/TEST LOAD #	ANSI TIER
W/2 Bolts	PG1118CA00	27 (12.2 kg)	8,000 / 12,000	8
Gasketed w/2 Bolts	PG1118CG00	27 (12.2 kg)	8,000 / 12,000	8
No Bolts	PG1118WA00	27 (12.2 kg)	8,000 / 12,000	8
Heavy Duty w/2 Bolts	PG1118HA00	27 (12.2 kg)	15,000 / 22,500	15
Gasketed Heavy Duty w/2 Bolts	PG1118HG00	27 (12.2 kg)	15,000 / 22,500	15
Extra Heavy Duty w/2 Bolts	PG1118HH00	27 (12.2 kg)	22,500 / 33,750	22

- Covers with meter lids available upon request.
- Gasketed covers and bolt grommets must be used with a gasketed box. Gaskets reduce the inflow of fluids but do not make the enclosure water tight.

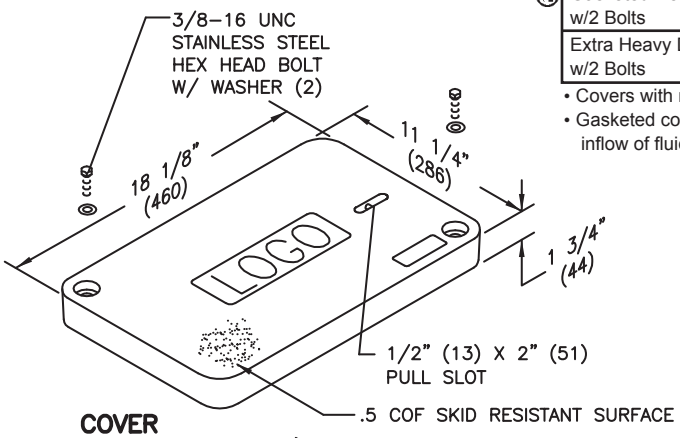

COVER

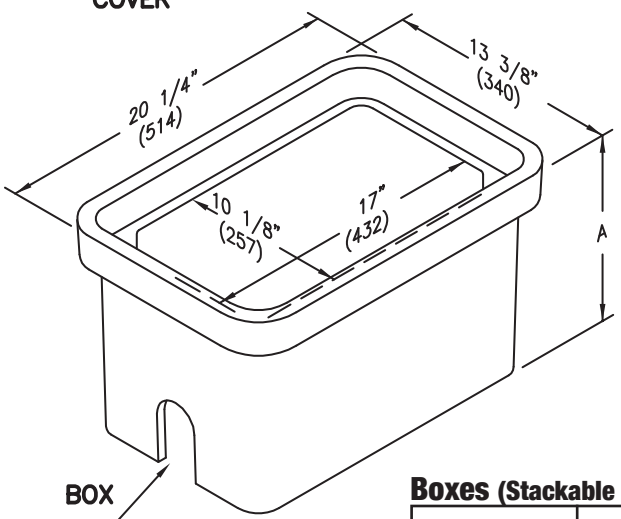

BOX

2X 2 1/2" (64) X 4" (102)
MOUSEHOLES (PG1118BB only)

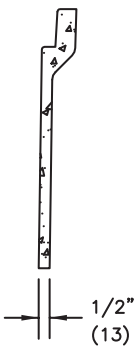

Boxes (Stackable with self-aligning, replaceable EZ-Nut)

DESCRIPTION	PART NO.	WEIGHT #	DIMENSION A	DESIGN/TEST LOAD #	ANSI TIER
Open Bottom	PG1118BA12	40 (18 kg)	12” (305 mm)	22,500 / 33,750	22
	PG1118BA18	53 (24 kg)	18” (457 mm)	22,500 / 33,750	22
Open Bottom w/ Gasket	PG1118BG12	40 (18 kg)	12” (305 mm)	22,500 / 33,750	22
	PG1118BG18	53 (24 kg)	18” (457 mm)	22,500 / 33,750	22
Open Bottom w/ 2 Mouseholes	PG1118BB12	40 (18 kg)	12” (305 mm)	22,500 / 33,750	22
	PG1118BB18	53 (24 kg)	18” (457 mm)	22,500 / 33,750	22
Solid Bottom	PG1118DA12	43 (19.5 kg)	12 1/2” (318 mm)	22,500 / 33,750	22
	PG1118DA18	60 (27 kg)	18 1/2” (470 mm)	22,500 / 33,750	22
Solid Bottom w/ Gasket	PG1118DG12	43 (19.5 kg)	12 1/2” (318 mm)	22,500 / 33,750	22
	PG1118DG18	60 (27 kg)	18 1/2” (470 mm)	22,500 / 33,750	22
Footed Box	PG1118JA12	41 (19 kg)	12 1/2” (318 mm)	22,500 / 33,750	22
	PG1118JA18	55 (25 kg)	18 1/2” (470 mm)	22,500 / 33,750	22

Dimensions & weights in parentheses are metric equivalent.

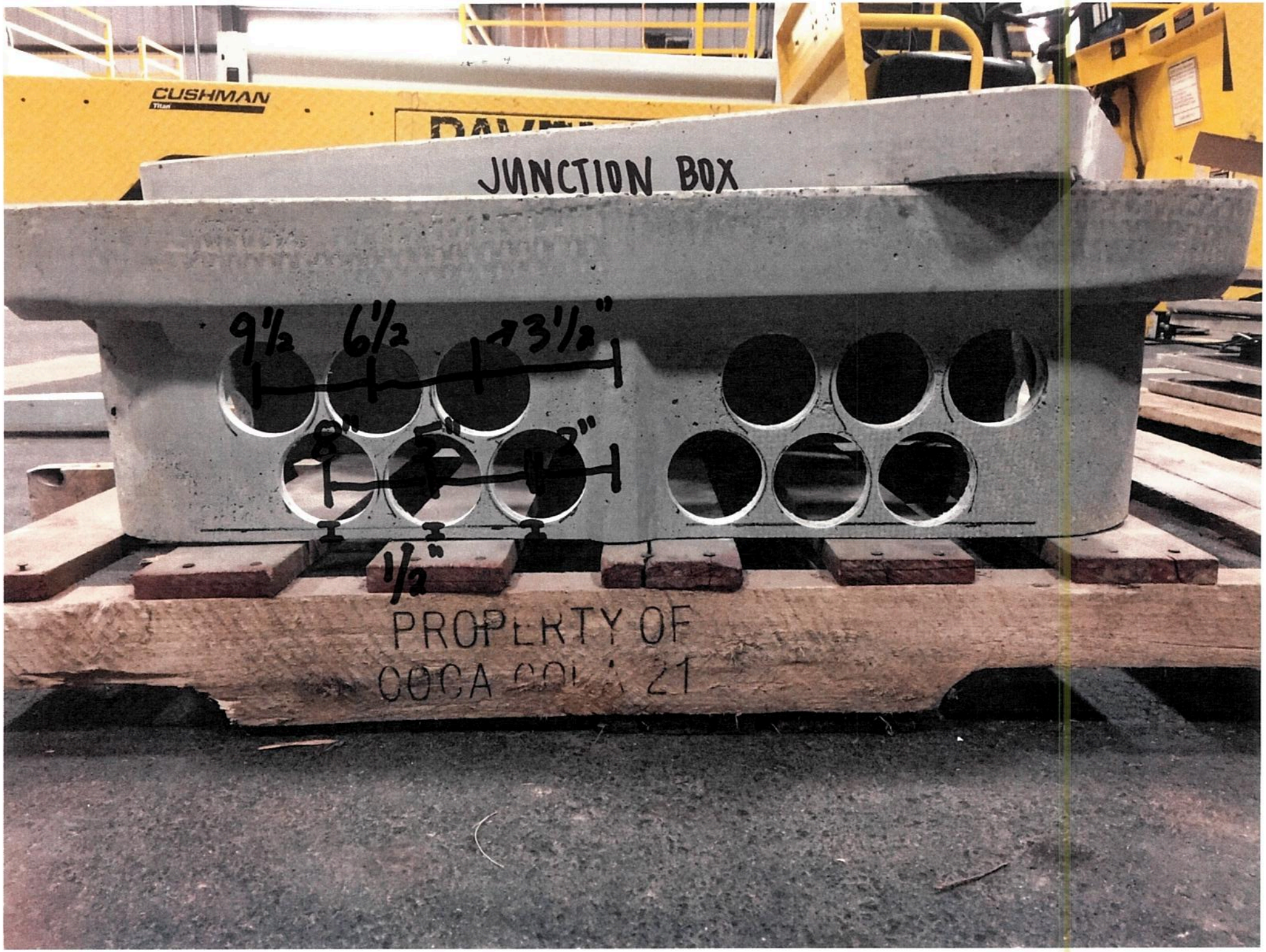
CUSHMAN
JUNCTION BOX
9½
6½
3½"
8"
5"
3"
½"
PROPERTY OF
COCA COLA 21

JUNCTION BOX
Oldcastle
Made a
17301336
Unit, PC 1730-24 T22
w/Lpnta, ELECTRIC
2x 1/2 in FCvr 011
0"
4 1/2"
7 1/2"
10 1/2"
15"
2 1/2"
1/2"
1/2"
1/2"

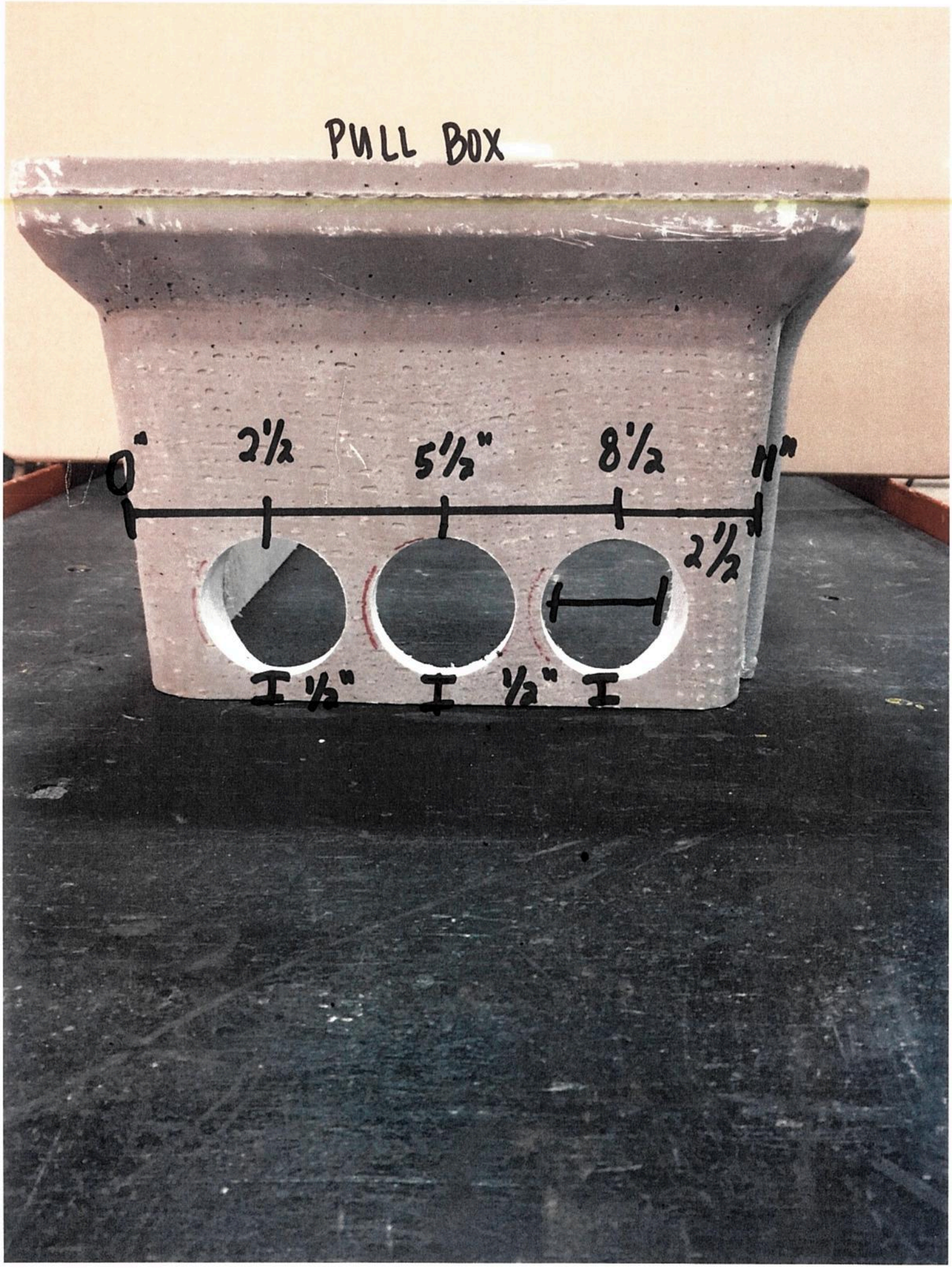
PULL BOX
0"
2½
5½"
8½
11"
2½
½"
½"

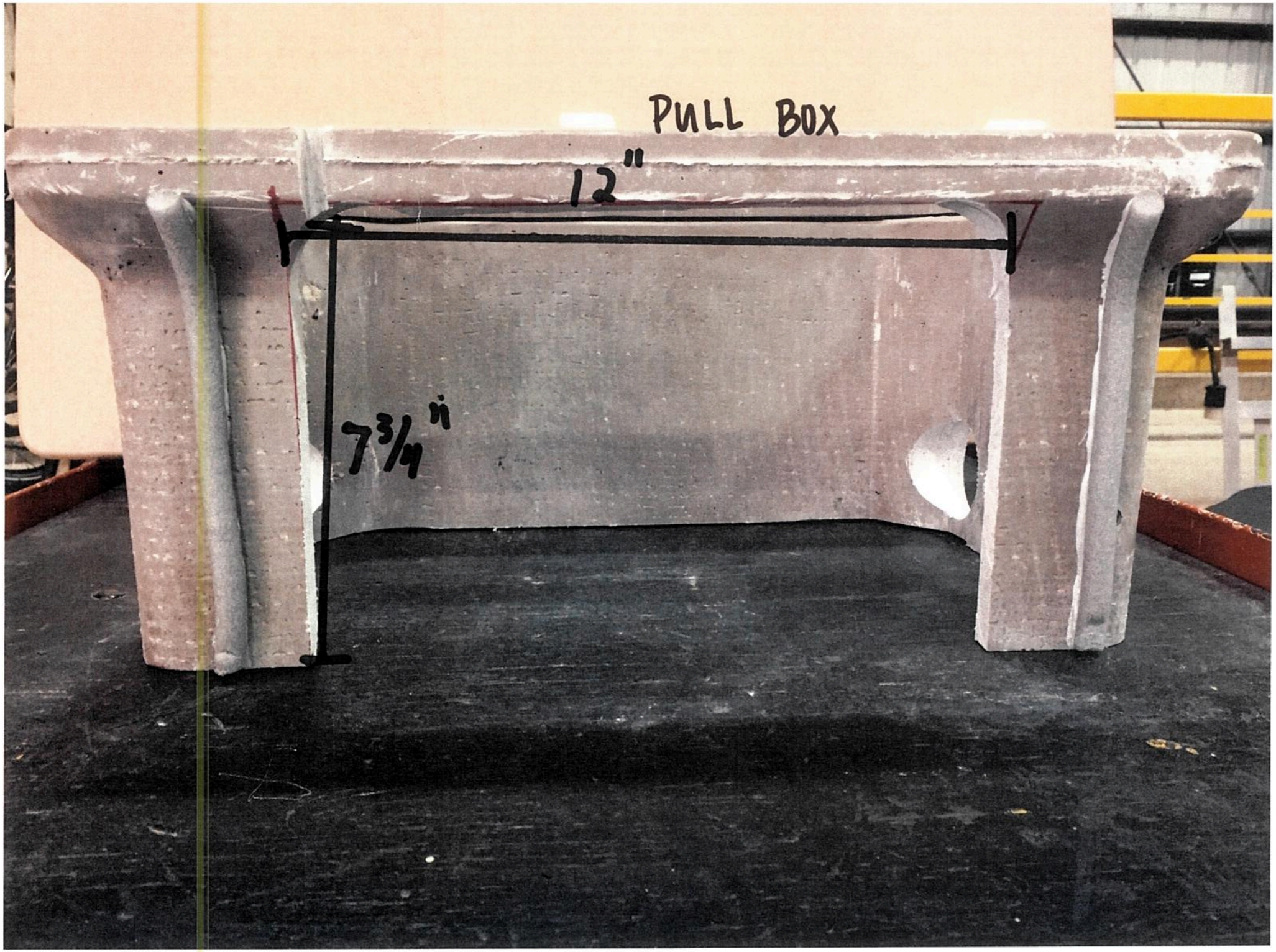
PULL BOX
12"
7 3/4"

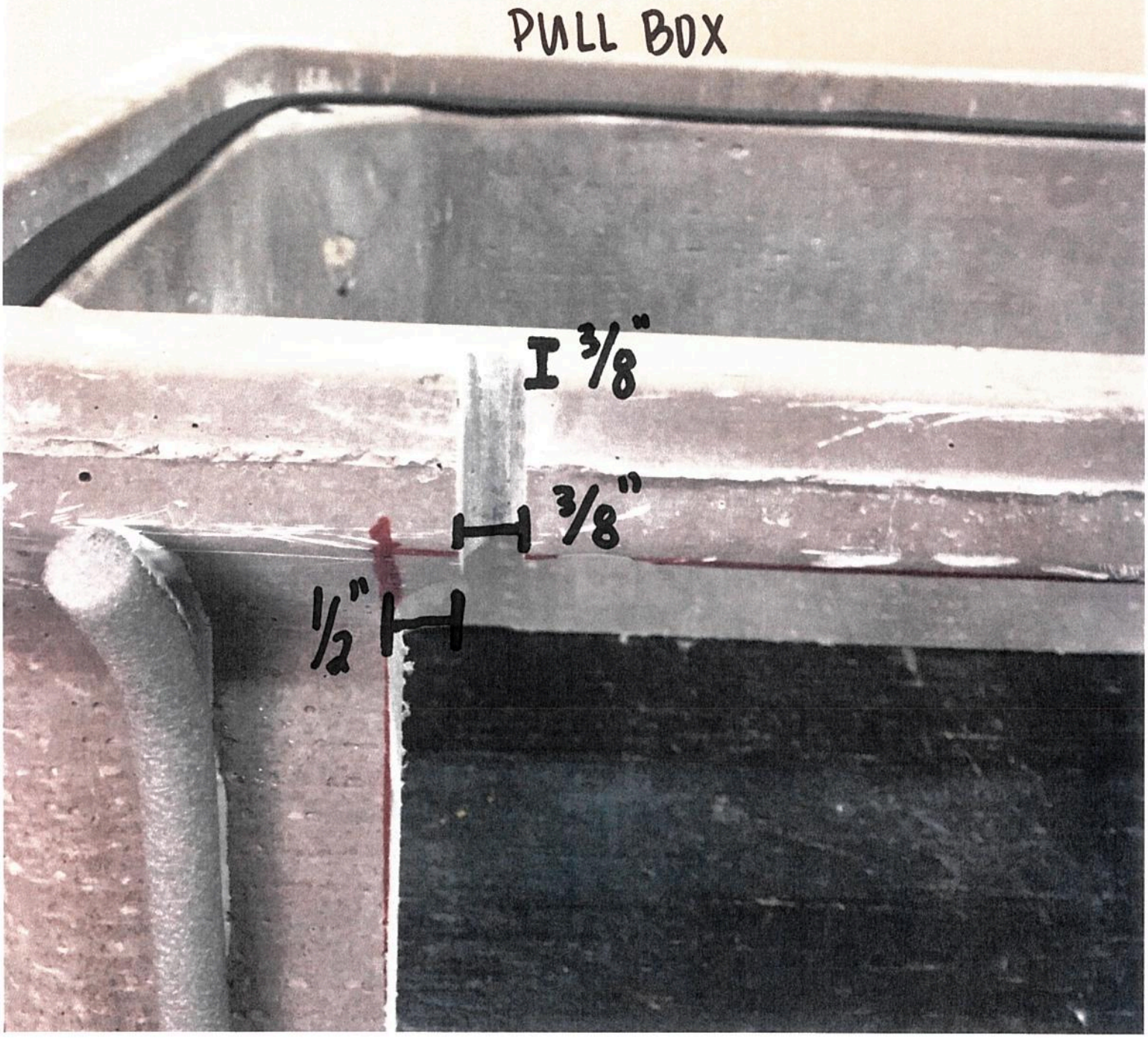
PULL BOX
3/8"
3/8"
1/2"

	NATIONAL AIRPORT PAVEMENT TEST FACILITY TRANSMITTAL OF SHOP DRAWINGS, EQUIPMENT DATA, MATERIAL SAMPLES, OR MANUFACTURER'S CERTIFICATES OF COMPLIANCE	**National Airport Pavement Test Facility** **William J. Hughes Technical Center** **Atlantic City International Airport** **New Jersey 08405**

Task Order:			**Date Submitted:**	
Project Name:			**Specification No.:**	
Transmittal Description:			**Source:**	
Transmittal Purpose:			**Transmittal Type:**	

Item No.:	**Description:**	**Variation:**	**Contractor Recommendation:**

Contractor Remarks:

1	
2	
3	
4	
5	
6	
7	
8	
9	
10	

Contractor Approval Actions:

Joe Gawrysiak	
Contractor Name & Signature	***Date***

FAA Review Action Codes:

		"A" - Approved as Submitted; Completed	**FAA Approval Actions:**	
		"B" - Approved, except as noted on drawings; Completed		
		"C" - Approved, resubmission required		
		"D" - Returned by Correspondence; Completed		
		"E" - Disapproved (see attached); Resubmit		
		"F" - Receipt Acknowledged; Completed		
		"G" - Other (Specify); Resubmit		
		"X" - Receipt Acknowledged, does not comply; Resubmit	***FAA Name & Signature***	***Date***

Additional FAA Comments:

1	
2	
3	
4	
5	

POLYESTER WIRE series "P" STRAIN GAUGE

C concrete | M metal | R rock

Compatible adhesive & Operational temperature
CN-E : −20~+80℃
RP-2 : −20~+80℃

Operational temperature −20~+80℃
Temperature compensation range +10~+80℃
Quarter bridge with 3-wire system is usable to avoid an unexpected effect of resistance change with temperature.

CONCRETE, MORTAR, ROCK MATERIALS USE

This is a wire strain gauge having polyester resin backing. It is mainly used for measurement on concrete, mortar or rock.

●Single-element (G.F. 2.1 approx.)

PL-60-11

●90° 2-element Cross (G.F. 2.1 approx.)

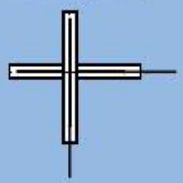

PLC-60-11 (×1/4)

●45°/90° 3-element Rosette (G.F. 2.1 approx.)

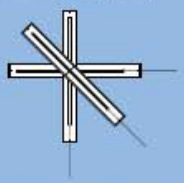

PLR-60-11 (×1/4)

Each package contains 10 gauges.

Type	Gauge size L	Gauge size W	Backing L	Backing W	Resistance in Ω
	L : length		W : width (Unit : mm)		
Single-element					
PL-60-11	60	1	74	8	120
PL-90-11	90	1	105	8	120
PL-120-11	120	1	135	8	120
90° 2-element Cross					
PLC-60-11	60	1	74	74	120
45°/90° 3-element Rosette					
PLR-60-11	60	1	74	74	120

Leadwire-integral P series

This gauge has a pre-attached vinyl lead wire to P series. Works for lead wire connection such as strain gauge terminal installation and lead wire soldering are not required. It saves much time and labor.

●Single-element (G.F. 2.1 approx.)
0.11mm² integral vinyl leadwire
Total leadwire resistance per meter : 0.32Ω

2-wire system

PL-60-11-1L

3-wire system

PL-60-11-3LT

Type		Gauge size L	Gauge size W	Backing L	Backing W	Resistance in Ω
PL-60-11	-1L	60	1	74	8	120
PL-90-11	-3L -5L -3LT -5LT	90	1	105	8	120
PL-120-11		120	1	135	8	120

PL-120-11-3LJCT-F

PL-60-11-3LT
Gauge length (mm)
Length of integral leadwire (m)
Code of integral leadwire

Each package contains 10 gauges.
Leadwire-integral service is not available with 2-element, 3-element gauge of P series.

TML STRAIN GAUGE TEST DATA

GAUGE TYPE	: PL-120-11	TESTED ON	: SS 400
LOT NO.	: Q202915	COEFFICIENT OF THERMAL EXPANSION	: 11.8 $\times 10^{-6}$/℃
GAUGE FACTOR	: 2.10 ±1%	TEMPERATURE COEFFICIENT OF G.F.	: +0.07±0.05 %/10℃
ADHESIVE	: P-2	DATA NO.	: CB0003

THERMAL OUTPUT (εapp : APPARENT STRAIN)

$\varepsilon app = -7.40\times10^{1}+5.17\times T^{1}-8.11\times10^{-2}\times T^{2}+3.85\times10^{-4}\times T^{3}-2.60\times10^{-7}\times T^{4}$ (μm/m)

TOLERANCE : ±0.85 [(μm/m)/℃] , T : TEMPERATURE

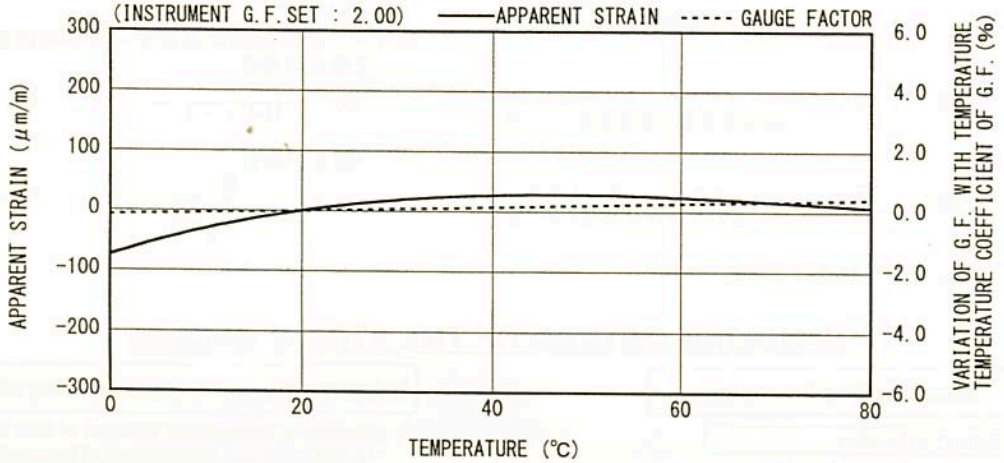

ひずみゲージ取扱いの注意事項

- 上記の特性データは、リード線の取付けによる影響を含んでおりません。裏面記載のリード線の測定値への影響に従って補正してください。
- ゲージの使用温度は、接着剤の耐熱温度などにより変わります。
- 絶縁抵抗などの点検は、印加電圧を５０V以下にしてください。
- ゲージリード線に無理な力を加えないでください。
- ゲージ裏面に接着剤を塗布して接着してください。
- ひずみゲージの裏面は脱脂洗浄してありますので、汚さないように取扱いしてください。
- ゲージの包装を開封後は、乾燥した場所で保管してください。
- ご使用に際してご不明な点などがございましたら、当社までお問い合わせください。

CAUTIONS ON HANDLING STRAIN GAUGES

- The above characteristic data do not include influence due to lead wires. Correct the data in accordance with the influence of lead wires on measured values described overleaf.
- The service temperature of strain gauge depends on the operating temperature of adhesive, etc.
- Check of insulation resistance, etc. should be made at a voltage of less than 50V.
- Do not apply an excessive force to the gauge leads.
- Apply an adhesive to the back of a strain gauge and stick the gauge to a specimen.
- As the back of strain gauge has been degreased and washed, do not contaminate it.
- After unpacking, store strain gauges in a dry place.
- If you have any questions on strain gauges or installation, contact TML or your local agent.

Made in Japan

TML 株式會社 東京測器研究所

〒140-8560 東京都品川区南大井 6-8-2
TEL 03-3763-5611
FAX 03-3763-6128

Tokyo Sokki Kenkyujo Co., Ltd.

8-2, Minami-Ohi 6-Chome
Shinagawa-ku, Tokyo 140-8560

TMLひずみゲージの取扱い方法

基本的な接着手順

1. **接着剤の選択** 使用する条件に合った、ひずみゲージ用の接着剤を選びます。
2. **表面処理** 被接着面のさび・塗料などを除去し、120～180番(アルミニウム:240～320番)のサンドペーパーで軽く磨きアセトンなどで清浄して、ゲージ接着位置をけがいてください。
3. **ゲージ接着** 接着剤の取扱説明書を参照してください。
4. **キュアリング** 接着剤の取扱説明書を参照してください。
5. **点検** ひずみゲージのゲージ抵抗値・絶縁抵抗値の点検を行ってください。
6. **結線** リード線はゲージ端子を使用して、はんだ付けで接続してください。

・必要に応じて防湿処理を施してください。

リード線の測定値への影響

●リード線の温度変化による影響。
（３線式結線法では、温度影響はありません。）

$$\varepsilon l = \frac{r \cdot L \cdot \alpha \cdot \Delta T}{K\,(R + r \cdot L)} \qquad \text{<式１>}$$

εl ＝リード線の熱出力
r ＝リード線１m当たりの往復の抵抗値（Ω／m）
L ＝リード線の長さ（m）
α ＝リード線の抵抗温度係数
（銅線＝3.9×10^{-3}／℃）
ΔT ＝温度変化量
K ＝ゲージ率
R ＝ゲージ抵抗

●リード線の結線によるゲージ率の補正。
・２線式の場合

$$Ko = \frac{R}{R + r \cdot L} \cdot K \qquad \text{<式２>}$$

・３線式の場合

$$Ko = \frac{R}{R + \frac{r \cdot L}{2}} \cdot K \qquad \text{<式３>}$$

Ko＝補正したゲージ率

HANDLING METHOD OF TML STRAIN GAUGES

Basic Bonding Procedures

1. **Select adhesive**
   Select an adhesive most suitable for test conditions.
2. **Surface treatment**
   Remove grease, rust, paint, etc. from the bonding surface of a specimen, lightly polish with an abrasive paper of #120 ～ 180 (#240 ～ 320 for aluminium), wipe with acetone, etc. and mark gauge installation position.
3. **Gauge installation**
   Refer to the operation manual of adhesive.
4. **Adhesive curing**
   Refer to the operation manual of adhesive.
5. **Gauge installation check**
   Check gauge resistance and insulation resistance.
6. **Lead wire attachment**
   Solder lead wires to the strain gauges through connecting terminals.

・If necessary, apply waterproof coating.

Influence of Lead Wires on Measured Values

● **Influence of temperature variation of lead wires (3-wire system is independent of temperature.)**

$$\varepsilon l = \frac{r \cdot L \cdot \alpha \cdot \Delta T}{K\,(R + r \cdot L)} \qquad \text{<Equation1>}$$

where εl = *thermal output of lead wires*
r = *total resistance per meter of lead wires (Ω/m)*
L = *length of lead wires (m)*
α = *temperature coefficient of resistance of lead wires (copper wire = 3.9×10^{-3}/℃)*
ΔT = *temperature variation*
K = *gauge factor*
R = *gauge resistance*

● **Gauge Factor Correction due to Lead Wire Attachment**

・**In case of 2-wire system**

$$Ko = \frac{R}{R + r \cdot L} \cdot K \qquad \text{<Equation2>}$$

・**In case of 3-wire system**

$$Ko = \frac{R}{R + \frac{r \cdot L}{2}} \cdot K \qquad \text{<Equation3>}$$

where Ko = *corrected gauge factor*

リード線1m当たりの往復の抵抗値
Total Resistance per Meter of Lead Wires

構成（心数／直径） Lead wires(number of cores / diameter)	ポリイミド線 polyimide	ポリイミド線 polyimide	7/0.12	10/0.12	12/0.18	20/0.18
リード線の直径または断面積 Diameter or cross sectional area of lead wires	φ 0.14mm	φ 0.18mm	0.08 mm²	0.11 mm²	0.3 mm²	0.5 mm²
1m当たりの往復の抵抗値 Total resistance per meter	2.5 Ω/m	1.5 Ω/m	0.44 Ω/m	0.32 Ω/m	0.12 Ω/m	0.07 Ω/m

Strain Gage Applications with M-Bond AE-10, AE-15 and GA-2 Adhesive Systems

GENERAL DESCRIPTION

The three adhesives described in this bulletin, M-Bond AE- 10, AE-15, and GA-2, are all 100%-solids epoxy systems for use with strain gages and special-purpose sensors. The gage installation procedure described is appropriate for each adhesive, the primary differences in the systems being in mixing instructions, pot life, cure cycles, and, to some extent, elongation properties. Each system is effective from the cryogenic region to +200°F [+95°C].

For proper results, the procedures and techniques presented in this bulletin should be used with qualified Micro-Measurements installation accessory products (refer to Micro-Measurements Accessories Catalog A-110). Accessories used in this procedure are:

- CSM Degreaser or GC-6 Isopropyl Alcohol
- CSP-1 Cotton Applicators
- PCT-2M Gage Installation Tape
- Silicon-Carbide Paper
- MJG-2 Mylar Tape
- M-Prep Conditioner A
- HSC Spring Clamp
- M-Prep Neutralizer 5A
- GT-14 Pads and Backup Plate
- GSP-1 Gauze Sponges

Handling Precautions

While these bonding agents are considered relatively safe to handle, contact with skin and inhalation of their vapors should be avoided. Immediate washing with ordinary soap and water is effective in cleansing should skin contact occur. For eye contact, rinse thoroughly with a copious amount of water and consult a physician. For additional health and safety information, consult the material safety data sheet, which is available upon request.

MIXING INSTRUCTIONS AND ADHESIVE CHARACTERISTICS

A. General

1. Each kit contains materials for mixing six batches of adhesive. Mixing instructions for M-Bond AE-10 and M-Bond AE-15 Bulk are included below.

2. Any resin removed from refrigeration must be allowed attain room-temperature equilibrium before being opened.

3. Mix adhesives thoroughly for five minutes according to instructions. If a room-temperature cure is used, allow the freshly mixed adhesive to stand an additional five minutes before use.

4. The pot life for Systems AE-10 and GA-2 can be prolonged by occasionally stirring to prevent localized exotherm in the center of the resin system, or by pouring it out onto a chemically clean metal plate.

Note: During storage, crystals may form in the Resin AE. These crystals do not affect adhesive performance, but should be reliquefied prior to mixing by warming the resin jar to +120°F [+50°C] for approximately one-half hour. Allow the resin to return to room temperature before adding curing agent; excess heat will shorten mixed pot life.

B. M-Bond AE-10 Adhesive Kit

AE-10 will cure at +70°F [+20°C] in 6 hours, with approximately 6% elongation capability and essentially creep-free performance. Elongation capability of approximately 10% can be obtained by extending the cure time to 24 to 48 hours at +75°F [+24°C].* To mix, fill one of the calibrated droppers with Curing Agent 10 exactly to the number 10 and dispense the contents into the center of the jar of Resin AE. Immediately cap the bottle of Curing Agent 10 to avoid moisture absorption. Mix thoroughly for 5 minutes, using one of the plastic stirring rods. The pot life or working time after mixing is 15 to 20 minutes. Discard the dropper after use.

M-Bond AE-10 Bulk is packaged with 200 grams of resin, 40 grams of Curing Agent 10, and three calibrated pipettes. The mix ratio is 10.0 parts by weight of AE Resin to 1.5 parts by weight of Curing Agent 10. Mix thoroughly for five minutes, then allow the mixture to stand for an additional five minutes before use. When mixing quantities greater than 10 grams of AE Resin, the normal pot life of 15-20 minutes will be shortened accordingly.

*Refer to Application Notes B-129 and TT-605 for discussions of high-elongation strain measurements.

C. M-Bond AE-15 Adhesive Kit

AE-15 requires moderately elevated curing temperatures, and is recommended for critical installations, such as strain gage transducers, where zero shift and hysteresis

must be minimized. The AE-15 system is also useful with high elongation strain gages at strain levels up to approximately 10% to 15% at +70°F [+20°C], and at strain levels up to 15% at +200°F [+95°C]. To mix, fill one of the calibrated droppers with Curing Agent 15 exactly to the number 15 and dispense the contents into the center of the jar of Resin AE. Immediately cap the bottle of Curing Agent 15 to avoid moisture absorption. Mix the Resin AE and the Curing Agent 15 thoroughly for 5 minutes, using one of the plastic stirring rods. The pot life is approximately 1-1/2 hours at +70°F [+20°C]. Discard the dropper after use.

M-Bond AE-15 Bulk is packaged with 200 grams of resin, 25 grams of Curing Agent 15, and three calibrated pipettes. The mix ratio is 10.0 parts by weight of AE Resin to 0.8 parts by weight of Curing Agent 15. Mix thoroughly for five minutes, then allow the mixture to stand for an additional five minutes before use. When mixing quantities greater than 10 grams of AE Resin, the normal pot life of 15-20 minutes will be shortened accordingly.

D. M-Bond GA-2 Kit

GA-2 is a partially filled 100%-solids epoxy adhesive. Resin GA-2 with Hardener 10-A will have approximately 10% to 15% elongation capabilities when cured for 40 hours at +70°F [+20°C], and approximately 6% elongation capabilities when cured for 6 hours at +70°F [+20°C]. To mix, fill one of the calibrated droppers with Hardener 10-A exactly to the number 10, and dispense the contents into the jar of Resin GA-2. Immediately cap the bottle of Hardener 10-A to prevent moisture absorption. Mix the Resin GA-2 and the Hardener 10-A thoroughly for 5 minutes using one of the plastic stirring rods. Pot life is approximately 15 minutes at +70°F [+20°C]. Discard the dropper after use.

GAGE INSTALLATION PROCEDURE

Step 1

The surface preparation technique used is the same basic cleaning procedure described in Micro-Measurements Application Note B-129, *"Surface Preparation for Strain Gage Bonding"*. The initial step is to thoroughly degrease with solvents such as CSM Degreaser or GC-6 Isopropyl Alcohol. CSM Degreaser is preferred whenever possible since this is a very active degreaser. The substitution of GC-6 as a degreasing agent should be considered for materials that may be sensitive to strong solvents. Any degreasing should be done with clean solvents. Thus the use of a "one-way" container, such as the aerosol can, is highly advisable.

Step 2

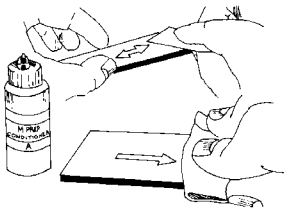

Dry-abrade the gaging area with 220- or 320-grit silicon-carbide paper to remove any scale or oxides on the base material. Apply M-Prep Conditioner A and wet-abrade the gage area. Keep the surface wet while abrading. Remove the residue and Conditioner by slowly wiping through the gaging area with a gauze sponge. The wet-abrade and wiping procedure should then be repeated with 400-grit silicon-carbide paper. With a 4H (hard) drafting pencil on aluminum or a ballpoint pen on steel, burnish whatever alignment marks are needed on the specimen. Rewet the surface with Conditioner A and scrub with cotton tipped applicators until a clean applicator is no longer discolored by the scrubbing. Remove the residue and Conditioner by slowly wiping through the gaging area with a gauze sponge. Do not wipe back and forth over the gage area since this may allow contaminants to be redeposited on the cleaned area.

Step 3

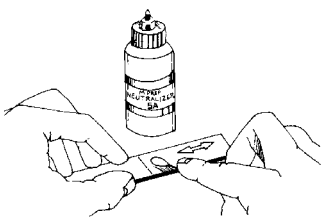

Apply a liberal amount of M-Prep Neutralizer 5A to the gage area. Keeping the surface wet, scrub with cotton tipped applicators. Do not allow evaporation of the cleaning material on the specimen surface since this would leave a thin, unwanted film between the adhesive and the specimen. Remove the Neutralizer by slowly wiping through the gage area, allowing the gauze sponge to absorb the Neutralizer. Do not wipe back and forth over

the gage area since this may allow contaminants to be redeposited on the cleaned area.

Step 4

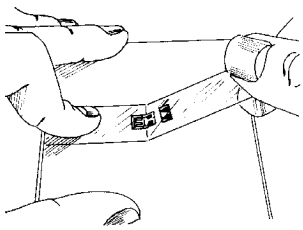

Remove the gage from its transparent envelope by grasping the edge of the gage backing with tweezers, and place bonding side down on a chemically clean glass plate or empty gage box. If a solder terminal is to be incorporated, position it on the plate adjacent to the gage as shown. A space of approximately 1/16 in [1.6 mm] should be left between the gage backing and terminal. Use 4 to 6 in [100 to 150 mm] of PCT-2M Gage Installation tape as a carrier to aid in positioning the strain gage and terminal. [When cure temperatures exceed +175°F [+80°C], MJG-2 mylar tape must be substituted for the gage installation tape.] Tack one end of the tape to the glass plate behind the gage and terminal, and wipe forward onto the terminal and gage. Carefully lift the tape at a shallow angle (about 45 degrees to the glass plate), bringing the gage up with it.

Step 5

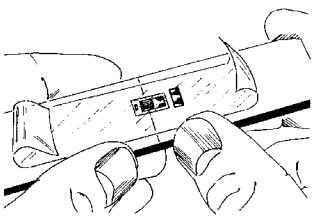

Position the gage/tape assembly so the triangle alignment marks on the gage are over the layout lines on the specimen. Holding the tape at a shallow angle, wipe the assembly onto the specimen surface. If the assembly appears to be misaligned, lift one end of the tape at a shallow angle until the assembly is free of the specimen. Realign properly and firmly anchor down at least one end of the tape to the specimen. This realignment can be done without fear of contamination by the tape mastic if the recommended gage installation tape is used. This tape will retain the mastic when removed.

Step 6

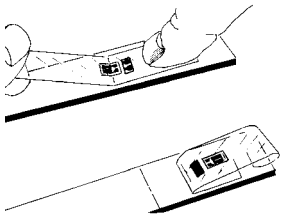

Lift one end of the tape at a shallow angle to surface (about 45 degrees) until gage and terminal are free of specimen surface. Tuck the loose end of the tape under and press to the surface so the gage lies flat with the bonding side exposed. In some cases this may be difficult because of space limitations. If this situation occurs, leave enough slack in the tape to allow a finger to be slipped behind the gage to support it while applying the adhesive.

Step 7

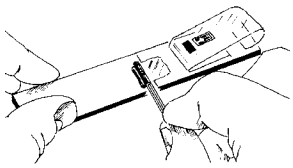

Coat the specimen, back of the gage, and terminal strip with the prepared adhesive. The mixing rod can be used to apply a thin layer of adhesive over each surface. Be careful not to pick up any unmixed components of the adhesive. To ensure this, it is advisable to wipe the mixing rod clean and then pick up a very small amount of the adhesive from the center area of the adhesive jar. Immediately after coating the gage and specimen with adhesive, proceed without delay to Step 8. This will limit the absorption of moisture by the uncured adhesive, and the gage installation tape will serve as a temporary moisture barrier during curing.

Step 8

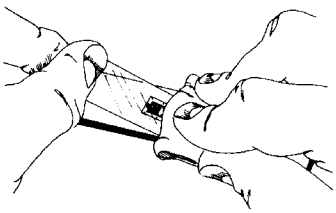

Lift the tucked-over end of tape and bridge it over the adhesive at approximately a 30-degree angle. With a piece of gauze, slowly make a single wiping stroke over the gage/tape assembly, bringing the gage back down over the alignment marks on the specimen. Use firm

pressure with your fingers when wiping over the gage, since the adhesive is quite viscous. A very thin layer of adhesive is desired for optimum bond performance.

Step 9

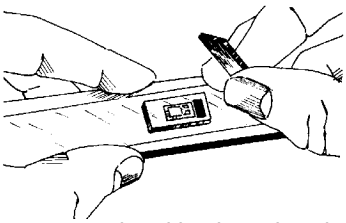

Place a silicone gum pad and backup plate (GT-14) over the gage installation. The silicone gum should be soft (Durometer A40-60) and at least 3/32 in [2.5 mm] thick. This will allow the clamping force to be exerted evenly over the gage. The area of the silicone gum pad should be used to compute the final clamping pressure.

Step 10

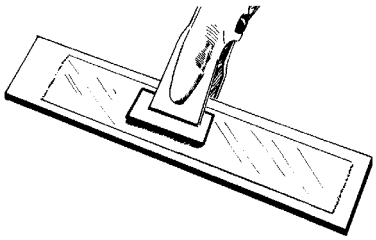

Apply force by spring clamp or dead weight until a clamping pressure of 5 to 20 psi [35 to 135 kN/m2] is attained. Take special care in making sure the clamping pressure is equal over the entire gage. Unequal clamping pressure may result in an irregular glueline. Take steps to ensure that the clamps will not slide out of position during cure. A few strips of tape to assist in holding the clamps or backup plate in place during cure may be helpful. Cure the installation in accordance with the recommended cure schedule below.

Step 11

The gage and terminal strip are now solidly bonded in place. To remove the tape, pull it back directly over itself, peeling it slowly and steadily off the surfaces. This technique will prevent possible lifting of the foil on open-faced gages or otherwise damaging the installation. It is not necessary to remove this tape immediately after gage installation. The tape will offer mechanical protection for the grid surface, and may be left in place until it is removed for gage wiring.

RECOMMENDED CURE SCHEDULES

M-Bond AE-10 and GA-2

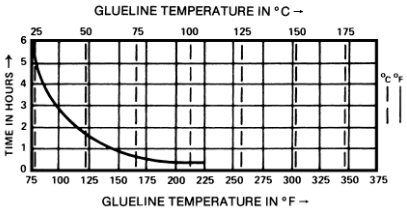

Caution: These systems may not cure properly below +70°F [+20°C]. Postcuring the installation for two hours at least +25°F [+15°C] above the maximum operating temperature with the clamping fixture removed will provide essentially creep-free performance.

M-Bond AE-15

Caution: To ensure proper polymerization, the cure cycle should start within 1.5 hours after mixing.

Note: Do not exceed +225°F [+105°C] cure temperature.

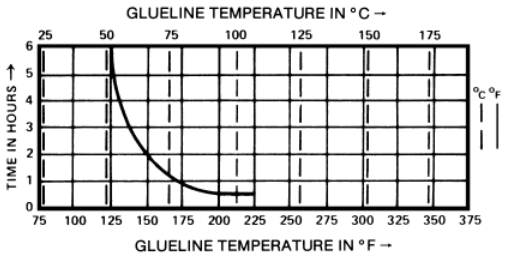

FINAL INSTALLATION PROCEDURE

1. Select appropriate solder and attach leadwires. Remove solder flux with RSK Rosin Solvent. See Catalog A-110 for these materials.

2. Select and apply protective coating. See Catalog A-110.

3. Micro-Measurements gages have been treated for optimum bonding conditions and require no precleaning before use unless contaminated during handling. If contaminated, the back of any gage may be cleaned with a cotton applicator slightly moistened with Neutralizer 5A.

MICRO MEASUREMENTS
A VPG Brand

Strain Gage Adhesive

OTHER ACCESSORIES USED IN AN M-BOND GA-2 INSTALLATION:

- CSM Degreaser or GC-6 Isopropyl Alcohol
- Silicon-Carbide Paper
- M-Prep Conditioner A
- M-Prep Neutralizer 5A
- GSP-1 Gauze Sponges
- CSP-1 Cotton Tip Applicators
- PCT-2M Gage Installation Tape
- HSC Spring Clamp
- GT-14 Pressure Pads and Backup Plates

Pb-free
RoHS COMPLIANT

DESCRIPTION

Two-component, partially filled, 100%-solids epoxy system for general-purpose stress analysis. Higher viscosity than AE systems. Elevated-temperature cure recommended for best performance and resistance to chemical attack. Often used to fill irregular surfaces. Uneven gluelines easily detectable by nonuniformity of bond color.

CHARACTERISTICS

PARAMETER	DETAILS
OPERATING TEMPERATURE RANGE	**Long Term:** –320° to +200°F (–195° to +95°C)
ELONGATION CAPABILITIES	4% at –320°F (–195°C), 10% to 15% at +75°F (+24°C) after 40-hr RT cure or 6-hr RT cure with postcure.
SHELF LIFE	Minimum 12 months at +75°F (+24°C); or 18 months at +40°F (+5°C). Refer to product label for most recent information.
POT LIFE	15 minutes at +75°F [+24°C]. Can be extended by cooling jar or by spreading adhesive on clean aluminum plate.
CLAMPING PRESSURE	5 to 20 psi (35 to 140 kN/m^2). The black filler provides a visual indication of nonuniform bond areas caused by uneven clamping pressure.
CURE REQUIREMENTS*	**Preferred Room Temperature Cure:** 40 hours at +75°F (+24°C). **Recommended Postcure:** 2 hours at 25°F (15°C) above maximum operating temperature.

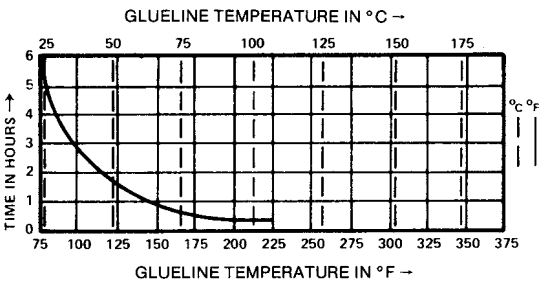

PACKAGING

KIT
6 mixing jars (15 g ea) Resin, 6 calibrated pipettes, 1 bottle (15 ml) Curing Agent 10-A, 6 stirring rods

* **References:** Instruction Bulletin B-137, "Strain Gage Applications with M-Bond AE-10, AE-15, and GA-2 Adhesive Systems," included in each kit.

Disclaimer

ALL PRODUCTS, PRODUCT SPECIFICATIONS AND DATA ARE SUBJECT TO CHANGE WITHOUT NOTICE.

Vishay Precision Group, Inc., its affiliates, agents, and employees, and all persons acting on its or their behalf (collectively, "VPG"), disclaim any and all liability for any errors, inaccuracies or incompleteness contained herein or in any other disclosure relating to any product.

The product specifications do not expand or otherwise modify VPG's terms and conditions of purchase, including but not limited to, the warranty expressed therein.

VPG makes no warranty, representation or guarantee other than as set forth in the terms and conditions of purchase. **To the maximum extent permitted by applicable law, VPG disclaims (i) any and all liability arising out of the application or use of any product, (ii) any and all liability, including without limitation special, consequential or incidental damages, and (iii) any and all implied warranties, including warranties of fitness for particular purpose, non-infringement and merchantability.**

Information provided in datasheets and/or specifications may vary from actual results in different applications and performance may vary over time. Statements regarding the suitability of products for certain types of applications are based on VPG's knowledge of typical requirements that are often placed on VPG products. It is the customer's responsibility to validate that a particular product with the properties described in the product specification is suitable for use in a particular application. You should ensure you have the current version of the relevant information by contacting VPG prior to performing installation or use of the product, such as on our website at vpgsensors.com.

No license, express, implied, or otherwise, to any intellectual property rights is granted by this document, or by any conduct of VPG.

The products shown herein are not designed for use in life-saving or life-sustaining applications unless otherwise expressly indicated. Customers using or selling VPG products not expressly indicated for use in such applications do so entirely at their own risk and agree to fully indemnify VPG for any damages arising or resulting from such use or sale. Please contact authorized VPG personnel to obtain written terms and conditions regarding products designed for such applications.

Product names and markings noted herein may be trademarks of their respective owners.

Copyright Vishay Precision Group, Inc., 2014. All rights reserved.

	NATIONAL AIRPORT PAVEMENT TEST FACILITY TRANSMITTAL OF SHOP DRAWINGS, EQUIPMENT DATA, MATERIAL SAMPLES, OR MANUFACTURER'S CERTIFICATES OF COMPLIANCE	**National Airport Pavement Test Facility** **William J. Hughes Technical Center** **Atlantic City International Airport** **New Jersey 08405**

Task Order:			**Date Submitted:**	
Project Name:			**Specification No.:**	
Transmittal Description:			**Source:**	
Transmittal Purpose:			**Transmittal Type:**	

Item No.:	**Description:**	**Variation:**	**Contractor Recommendation:**

Contractor Remarks:

1	
2	
3	
4	
5	
6	
7	
8	
9	
10	

Contractor Approval Actions:

Janine Abyad	
Contractor Name & Signature	***Date***

FAA Review Action Codes:

		"A" - Approved as Submitted; Completed	**FAA Approval Actions:**	
		"B" - Approved, except as noted on drawings; Completed		
		"C" - Approved, resubmission required		
		"D" - Returned by Correspondence; Completed		
		"E" - Disapproved (see attached); Resubmit		
		"F" - Receipt Acknowledged; Completed		
		"G" - Other (Specify); Resubmit		
		"X" - Receipt Acknowledged, does not comply; Resubmit	***FAA Name & Signature***	***Date***

Additional FAA Comments:

1	
2	
3	
4	
5	

SUBMITTAL COVER

A.E. STONE, INC.
1435 Doughty Road
Egg Harbor Township, NJ 08234
Tel: 609-641-2781
Fax: 609-641-0374

DATE: 11/15/2018

SUBMITTAL #: 006 Rev

Work Order N0. 1815

PROJECT: Outdoor / Indoor Reflective Cracking Phase I Construction
William J. Hughes Technical Center, National Airport Pavement Research Center
Atlantic City International Airport, New Jersey

OWNER: FAA
William J. Hughes Technical Center
Atlantic City Airport, New Jersey
Northfield, NJ

Attn: Benjamin Mahaffay
Tel: 602-550-5275
Fax:
E-mail: benjamin.mahaffay@faa.gov

ENGINEER: SRA International Inc.
Egg Harbor Township, NJ 08234

Attn: Janine Abyad
Tel: 973-356-5030
Fax:
E-mail: Abyad, Janine [janine.abyad@gdit.com]

CONTRACTOR: A.E. Stone, Inc.

SUBCONTRACTOR: **L. Feriozzi Concrete Company**

SUBMITTAL PAGES: 1

ITEM NO.: **N/A**

UNIT CODE NO.:

ITEM DESCRIPTION: **L & M Cure - Dissipating Curing Compound**

SPECIFICATION: **P501 - Curing Compound**

PRIORITY:

MANUFACTURER or SUPPLIER **Laticrete International Inc.**

NOTES: Submittals include correspondence from Lacticrete confirming the the dissipating cure.

FOR ENGINEER USE ONLY

This is to certify that the above is submitted in accordance with the applicable plans and specifications for this project.

A.E. STONE, INC.

Christopher Brower

SUBMITTAL COVER SHEET

L.FERIOZZI
CONCRETE COMPANY

3010 Sunset Avenue
Atlantic City, New Jersey 08401
Phone (609) 823-2563
Fax (609) 344-3719

DATE: 11/15/18	**LFCC JOB #**
PROJECT: **Outdoor Reflective Cracking at FAA**	
TO: **AE Stone** **Attn: Christopher Brower**	SUBCONTRACTOR:

DATE	NO.	COPIES	DESCRIPTION
11/15/18	006 R2	1	L&M Cure Letter from Chief Chemist stating that L&M Cure is NOT a membrane forming curing compound.
		1	A Letter from Victor Scorcese, a representative of LATRICRETE. LATRICRETE International, Inc. has taken ownership of L&M Construction Chemicals, Inc.

CONTRACTOR REVIEW	ARCHITECT / DESIGNER APPROVAL
We hereby state that we have reviewed, inspected and checked the information herewith submitted and vouch for its accuracy and compliance with the Contract Documents.	
DATE: **11/15/18**	
SIGNED: **Martin J. Gorka**	

L&M Construction Chemicals Inc.
Industrial • Commercial • Institutional

September 7, 2011

Whom It May Concern

Re: L&M CURE Certification

L&M CURE is a VOC compliant blend of sodium and potassium metasilicates that cures concrete leaving surfaces residue and membrane free, ready to receive subsequent toppings, coatings, stains, tile, or penetrating treatments. L&M CURE does not meet ASTM C309 standards for curing concrete as it is not a membrane forming curing compound.

Sincerely,

Stuart R. Wood
Chief Chemist

14851 Calhoun Road • Omaha, NE 68152
402-453-6600 • 800-362-3331
FAX 402-453-0244 • FAX On Demand 800-839-9887

November 15, 2018

RE: L&M™ Cure™ Compatibility

To: Martin Gorka
L. Feriozzi Concrete Company

Please note that LATICRETE® L&M™ Cure™, when tested against ASTM C 156 for water retention, retains the required amount of moisture that is referenced in ASTM C 309 when finished with a steel trowel. L&M Cure is non-residue and non-film forming; when installed properly, allows for compatibility with subsequent treatments, or toppings.

Contractor must strictly follow the installation requirements and procedures of the subsequent adhesive/topping manufacturer.
Sincerely,

Vic Scotese

R. Victor Scotese
TSM
LATICRETE International, Inc.
Letter # MCS Cure Letter

"As a professional courtesy, LATICRETE International, Inc. (LATICRETE) offers technical services free of charge. LATICRETE does not have any expressed or implied contractual obligation or duty to provide those technical services. The user maintains all responsibility for verifying the applicability and suitability of the technical service or information provided. Moreover, technical service site visits and consultations by any LATICRETE representatives do not constitute expressed or implied approval of product use or other construction means or methods. By providing technical services, LATICRETE does not perform any duty owed by the user to any third party, and no third party should rely on LATICRETE providing technical services."

	NATIONAL AIRPORT PAVEMENT TEST FACILITY TRANSMITTAL OF SHOP DRAWINGS, EQUIPMENT DATA, MATERIAL SAMPLES, OR MANUFACTURER'S CERTIFICATES OF COMPLIANCE	**National Airport Pavement Test Facility** **William J. Hughes Technical Center** **Atlantic City International Airport** **New Jersey 08405**

Task Order:			**Date Submitted:**	
Project Name:			**Specification No.:**	
Transmittal Description:			**Source:**	
Transmittal Purpose:			**Transmittal Type:**	

Item No.:	**Description:**	**Variation:**	**Contractor Recommendation:**

Contractor Remarks:

1	
2	
3	
4	
5	
6	
7	
8	
9	
10	

Contractor Approval Actions:

Janine Abyad	
Contractor Name & Signature	***Date***

FAA Review Action Codes:

		"A" - Approved as Submitted; Completed	**FAA Approval Actions:**	
		"B" - Approved, except as noted on drawings; Completed		
		"C" - Approved, resubmission required		
		"D" - Returned by Correspondence; Completed		
		"E" - Disapproved (see attached); Resubmit		
		"F" - Receipt Acknowledged; Completed		
		"G" - Other (Specify); Resubmit		
		"X" - Receipt Acknowledged, does not comply; Resubmit	***FAA Name & Signature***	***Date***

Additional FAA Comments:

1	
2	
3	
4	
5	

SUBMITTAL COVER

A.E. STONE, INC.
1435 Doughty Road
Egg Harbor Township, NJ 08234
Work Order N0. 1815

Tel: 609-641-2781
Fax: 609-641-0374

DATE: 11/2/2018

SUBMITTAL #: 007

PROJECT: Outdoor / Indoor Reflective Cracking Phase I Construction
William J. Hughes Technical Center, National Airport Pavement Research Center
Atlantic City International Airport, New Jersey

OWNER: FAA
William J. Hughes Technical Center
Atlantic City Airport, New Jersey
Northfield, NJ

Attn: Benjamin Mahaffay
Tel: 602-550-5275
Fax:
E-mail: benjamin.mahaffay@faa.gov

ENGINEER: SRA International Inc.
Egg Harbor Township, NJ 08234

Attn: Janine Abyad
Tel: 973-356-5030
Fax:
E-mail: Abyad, Janine [janine.abyad@gdit.com]

CONTRACTOR: A.E. Stone, Inc.

SUBCONTRACTOR: **L. Feriozzi Concrete Company**

SUBMITTAL PAGES: 1

ITEM NO.: **N/A**

UNIT CODE NO.:

ITEM DESCRIPTION: **Vibra Screed - Cut Sheet**

SPECIFICATION: **P501 - Means and Methods**

PRIORITY:

MANUFACTURER or SUPPLIER **Northstar Equipment**

NOTES:

FOR ENGINEER USE ONLY

This is to certify that the above is submitted in accordance with the applicable plans and specifications for this project.

A.E. STONE, INC.

Christopher Brower

SUBMITTAL COVER SHEET

L.FERIOZZI
CONCRETE COMPANY

3010 Sunset Avenue
Atlantic City, New Jersey 08401
Phone (609) 823-2563
Fax (609) 344-3719

DATE: 11/2/18	**LFCC JOB #**
PROJECT: **Outdoor Reflective Cracking at FAA**	
TO: **AE Stone** **Attn: Christopher Brower**	SUBCONTRACTOR:

DATE	NO.	COPIES	DESCRIPTION
11/2/18	007	1	Vibra Screed Specs

CONTRACTOR REVIEW	ARCHITECT / DESIGNER APPROVAL
We hereby state that we have reviewed, inspected and checked the information herewith submitted and vouch for its accuracy and compliance with the Contract Documents.	
DATE: **11/2/18**	
SIGNED: **Martin J. Gorka**	

Features + Benefits

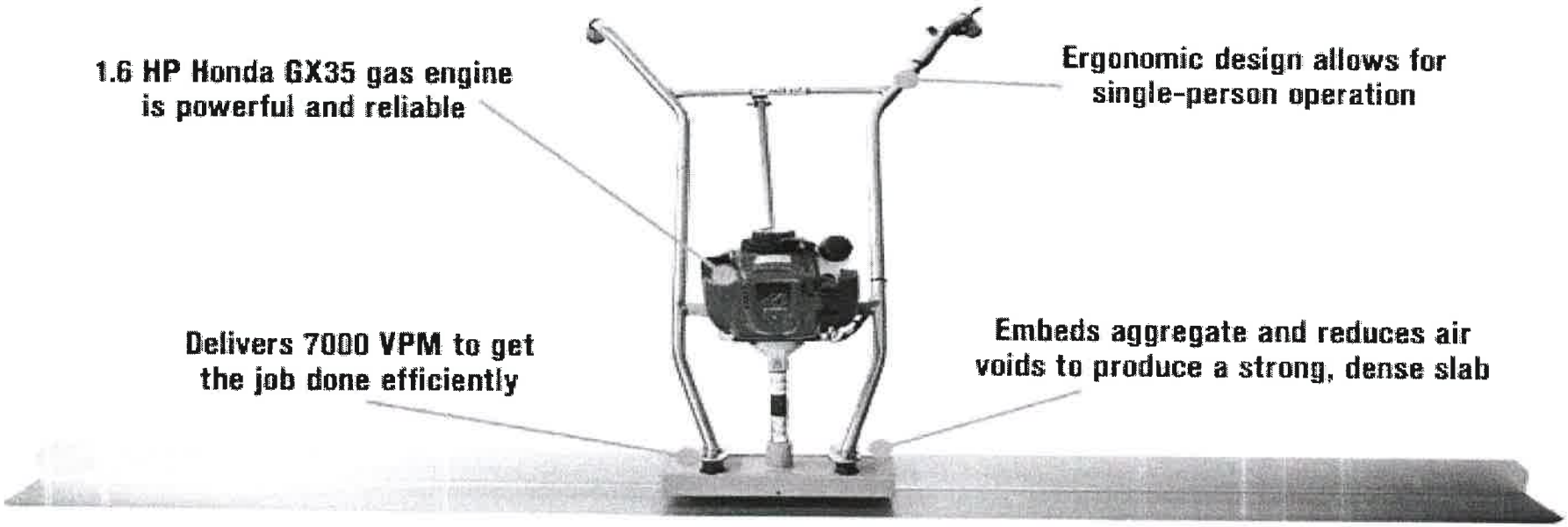

- High-performance screed is a reliable, durable choice for your concrete application
- Embeds aggregate and reduces air voids to produce a strong, dense slab
- Features a dependable 1.6HP Honda GX35 4-cycle gas-powered engine, and is compatible with durable aluminum screed boards (sold separately)
- Delivers 7,000 vibrations per minute
- Design allows for single-person operation
- Works with 8-, 10-, 12- and 14-ft. screed boards (Item#s 49397, 49398, 49399 and 49400, sold separately)
- 2-year limited warranty/3-year limited warranty on Honda GX engine

Key Specs

	NATIONAL AIRPORT PAVEMENT TEST FACILITY TRANSMITTAL OF SHOP DRAWINGS, EQUIPMENT DATA, MATERIAL SAMPLES, OR MANUFACTURER'S CERTIFICATES OF COMPLIANCE	**National Airport Pavement Test Facility** **William J. Hughes Technical Center** **Atlantic City International Airport** **New Jersey 08405**

Task Order:			**Date Submitted:**	
Project Name:			**Specification No.:**	
Transmittal Description:			**Source:**	
Transmittal Purpose:			**Transmittal Type:**	

Item No.:	**Description:**	**Variation:**	**Contractor Recommendation:**

Contractor Remarks:

1	
2	
3	
4	
5	
6	
7	
8	
9	
10	

Contractor Approval Actions:

Janine Abyad	
Contractor Name & Signature	***Date***

FAA Review Action Codes:

		"A" - Approved as Submitted; Completed	**FAA Approval Actions:**	
		"B" - Approved, except as noted on drawings; Completed		
		"C" - Approved, resubmission required		
		"D" - Returned by Correspondence; Completed		
		"E" - Disapproved (see attached); Resubmit		
		"F" - Receipt Acknowledged; Completed		
		"G" - Other (Specify); Resubmit		
		"X" - Receipt Acknowledged, does not comply; Resubmit	***FAA Name & Signature***	***Date***

Additional FAA Comments:

1	
2	
3	
4	
5	

RITCHIE Specs Everything about Equipment

DYNAPAC ca25-2 Vibratory Smooth Drum Roller

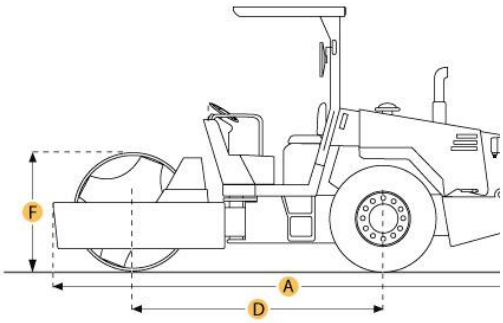

Selected Dimensions

Dimensions		
A. Overall Length	18.2 in	5550 mm
B. Overall Width	7 ft in	2130 mm
C. Height to Top of Cab	9.8 ft in	2972 mm
D. Wheelbase	9.4 in	2879 mm
E. Ground Clearance	15.7 in	400 mm

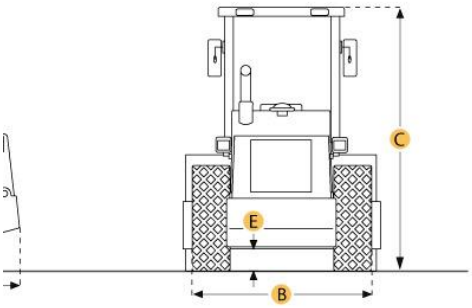

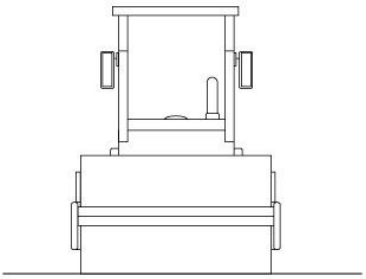

RITCHIE Specs Everything about Equipment

DYNAPAC ca25-2 Vibratory Smooth Drum Roller

Specification

Engine		
Make	Cummins	
Model	QSB 4.5	
Gross Power	125 hp	93 kw
Power Measured @	2200 rpm	
Aspiration	water cooled turbo diesel with after cooler	
Operational		
Operating Weight	22575.3 lb	10240 kg
Fuel Capacity	66 gal	250 L
Max Speed	10.6 mph	17 km/h

Tires *if applicable	23.1x26	
Drum		
Drum Width	83.9 in	2130 mm
Drum Diameter	60 in	1523 mm
Static Linear Load	lb/in	27.4 kg/cm
Vibration Frequency 1	33 Hz	
Nominal Amplitude - High	0.07 in	1.7 mm
Nominal Amplitude - Low	0.03 in	0.8 mm
Centrifugal Force - High	55303 lb	246 kN
Centrifugal Force - Low	26752.3 lb	119 kN
Dimensions		
Overall Length	18.2 in	5550 mm
Overall Width	7 ft in	2130 mm
Height to Top of Cab	9.8 ft in	2972 mm
Wheelbase	9.4 in	2879 mm
Ground Clearance	15.7 in	400 mm

MAX. OPERATING WEIGHT: 28.78 tonnes (63445lb) MAX. HORSEPOWER: 132 kW (177hp)

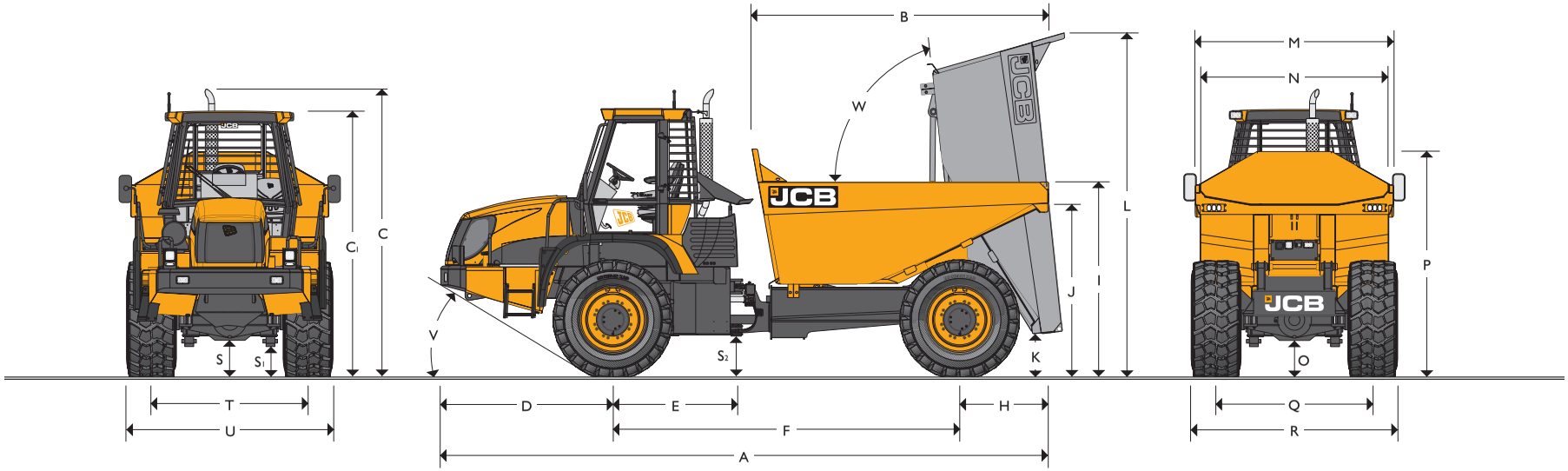

STATIC DIMENSIONS

		mm (ft-in)
A	Overall length	7709 (25-4)
B	Body length	3745 (12-3)
C	Max. height	3575 (11-8)
C1	Height to top of cab	3330 (10-11)
D	Front axle to front bumper	2174 (7-1)
E	Front axle to rear of front unit	1576 (5-2)
F	Wheelbase (front axle to rear axle)	4400 (14-5)
H	Rear axle to of body	1130 (3-7)
I	Height to top of body	2392 (7-10)
J	Height to lip of body	2141 (7-0)
K	Min. height to body when tipped	473 (1-7)
L	Max. height to body when tipped	4268 (14-0)
M	Max. external body width	2542 (8-4)
N	Max. internal body width	2370 (7-8)

			mm (ft-in)
O	Max. ground clearance (rear diff)		430 (1-4)
P	Max. body height to spill guard		2802 (9-2)
Q	Wheel track (rear)		1948 (6-4)
R	Overall width (rear)		2608 (8-6)
S	Max. ground clearance (front diff)		430 (1-4)
S1	Max. ground clearance (front suspension arm)		312 (1-0)
S2	Ground clearance		438 (1-5)
T	Wheel track (front)		1948 (6-4)
U	Overall width		2608 (8-6)
V	Departure angle (front)	degrees	30
W	Body tip angle	degrees	84
	Load capacity	tonnes/lb	16.33 (36000)
	Body – heaped	m^3 (yd^3)	9.6 (12.56)

Overall dimensions based on an unladen machine equipped with Michelin 650/65 R25 XAD tyres.

ENGINE

Type		6 cylinder direct injection diesel
Model		QSB 6.7
Capacity	litres (in³)	6.7 (409)
Bore	mm (in)	107 (4.25)
Stroke	mm (in)	124 (4.75)
Aspiration		Turbocharged/charge cooled
Cylinders		6
Power rating		
Max. power	kW (HP) @ 2000 rpm	133 (178)
Gross power to SAE J1995/ISO 14396	kW (HP) @ 2200 rpm	129 (173)
Net power to SAE J1349/EEC80/1269	kW (HP) @ 2200 rpm	125 (168)
Torque rating		
Max. torque	Nm (lbf ft) @ 1400 rpm	800 (590)
Net torque	Nm (lbf ft) @ 1400 rpm	761 (561)

TRANSMISSION

Transmission	Type	Smoothshift
	Make	ZF
	Model	6WG160
Torque converter	Type	Single stage
	Torque converter ratio	1.792:1

AXLES

Type	Epicyclic hub reduction
Make	Graziano
Model	PR15
Overall axle ratio	23.538:1

SUSPENSION

Type (front)	4-bar parallel link
Make	JCB
Type (rear)	Fixed
Make	n/a

TRAVEL SPEEDS

Assumes fitment of Michelin 650/65 R25 tyres		kph (mph)
Forward	First	4.8 (3.0)
	Second	7.4 (4.6)
	Third	11.3 (7.0)
	Fourth	17.3 (10.7)
	Fifth	25.8 (16.0)
	Sixth	39.4 (24.5)
Reverse	First	5.0 (3.1)
	Second	11.9 (7.4)
	Third	27.2 (16.9)

HYDRAULICS

Steering and tipping	Pump type		Gear
	Pump: max flow @ 2200rpm	l/min (UK gal/min)	121 (26.6)
	Pump: max pressure (MRV)	bar (psi)	207 (3000)
Braking	Pump type		Gear
	Pump: max flow @ 2200rpm	l/min (UK gal/min)	17.6 (3.9)
	Pump: max pressure	bar (psi)	175 (2500)

SERVICE FILL CAPACITIES

	litres (UK gal)
Hydraulic system	160 (35)
Fuel tank	211 (46)
Engine oil sump	16.3 (3.58)
Transmission system	35 (7.7)
Axle oil (front)	29 (6.38)
Axle oil (rear)	29 (6.38)
Engine coolant system	30 (6.60)

ELECTRICAL SYSTEM

System voltage	Volt	24
Alternator output	Amp hour	70
Battery capacity	Amp hour	2 x 110

BODY

Tipping angle	degrees	84
Body plate thickness (front)	mm (ft-in)	6 (0-020)
Body plate thickness (side)	mm (ft-in)	6 (0-020)
Body plate thickness (bottom/chute)	mm (ft-in)	6 (0-026)
Yield strength	N/mm² (psi)	1000 (145000)
Tensile strength	N/mm² (psi)	1245 (181000)
Hardness (min)	HB	400
Body raise (laden)	seconds	12
Body lower (laden)	seconds	8
Scow angle	degrees	25

TURNING CIRCLE

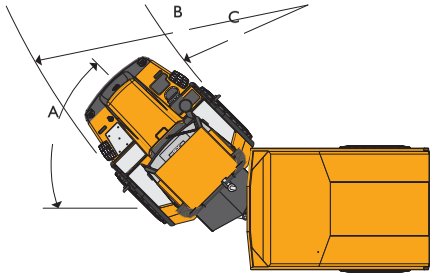

		mm (ft-in)
A Articulation angle	degrees	40
B Clearance radius		7520 (24-7)
C Turning radius		4440 (14-6)

OPERATING WEIGHTS

		Unladen	Laden
Front Axle	tonnes (lb)	8.2 (18078)	11.85 (26131)
Rear Axle	tonnes (lb)	4.76 (10494)	17.45 (38473)
Total	tonnes (lb)	12.96 (28572)	29.3 (64604)

Includes operator (80kg) and a full fuel tank.

CHANGES TO GROUND BEARING PRESSURES

Manufacturer	Tyre Size	Type	Unladen		Laden		Tyre Pressure	
			Front	Rear	Front	Rear	Front	Rear
			kPa (PSI)	kPa (PSI)	kPa (PSI)	kPa (PSI)	kPa (PSI)	kPa (PSI)
Michelin	650/65 R25	XADN	86 (13)	50 (7)	125 (18)	184 (27)	248 (36)	400 (58)
Goodyear	650/65 R25	GP-3D	82 (12)	47 (7)	118 (17)	174 (25)	220 (32)	370 (54)
Nokian	750/55 R25	TRSLS-2	73 (11)	42 (6)	105 (15)	155 (23)	224 (32.5)	448 (65)
Trelleborg	850/45 B30.5	423TL	62 (9)	36 (5)	90 (13)	133 (19)	200 (29)	345 (50)

Ground bearing pressure @ 15% sinkage.

CHANGES TO OPERATING DIMENSIONS

Manufacturer	Tyre Size	Type	Dimensional changes				Operating weight
			U	T	R	Q	
			mm (in)	mm (in)	mm (in)	mm (in)	kg (lb)
Michelin	650/65 R25	XAD	0	0	0	0	0
Nokian	750/55 26.5	TRS LS-2	+180 (7.0)	+90 (3.5)	+180 (7.0)	+90 (3.5)	–772 (1698)
Trelleborg	850/45 B30.5	423TL	+380 (14.5)	+190 (7.5)	+380 (14.9)	+190 (7.5)	–980 (2156)
Goodyear	650/65 R25	GP-3D	+16 (0.6)	+8 (0.3)	+16 (0.6)	+8 (0.3)	– 8 (1.8)

RETARDATION CURVE

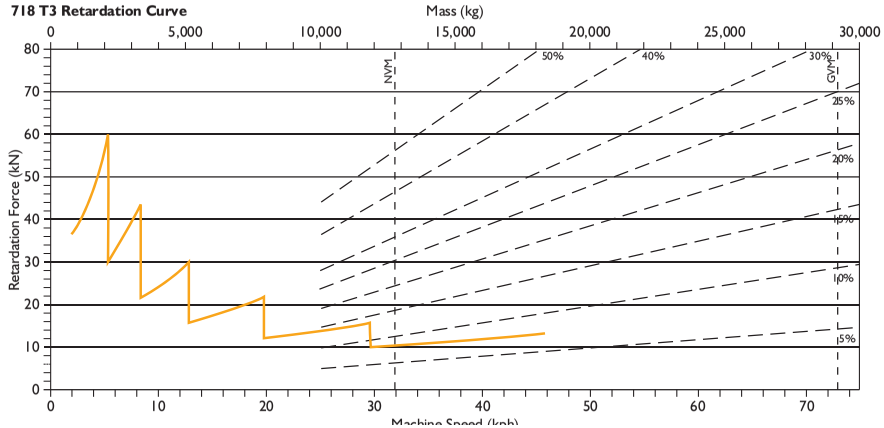

STANDARD EQUIPMENT

Engine: 6 cylinder, direct injection diesel engine. Wastegate turbocharger charged cooler for maximum torque and minimum exhaust smoke. 3 stage dry type-cyclonic air cleaner with primary and safety elements. Stainless steel exhaust system, .

Suspension: Front suspension is a four bar parallel link mechanism connected via a gas strut to a pre charged accumulator that dampens the vibration. The system is self-levelling whether laden or un-laden.

Transmission: 6 forward and 3 reverse speed remote mount smoothshift transmission with integral lock up torque converter. Manual or automatic selection. Electrical 2/4 wheel drive selection.

Axles: Pad mounted to the front suspension and the rear chassis. Limited Slip Differential in both axles. Planetary wheel hub reduction.

Steering: Double acting hydrostatic system. Priority steer valve. Emergency steering via a ground driven pump.

Brakes: Dual circuit, hydraulic power dry disc type with braking on all four wheels. Electrically operated dry disc parking brakes on the driveline, spring applied and hydraulically released. Brake disc guards.

Hydraulics: Twin gear pump system comprising main pump for priority steer and body tip, and a second pump for braking. Emergency steer via a ground driven pump.

Cab: ROPS and FOPS safety structure. Fully adjustable air suspension seat. Adjustable steering column. Air conditioning. Laminated safety glass. Electronic monitoring panel with LCD message display which includes body up warning light. Front & rear screen wash / wipe. 3 speed heater / demisting with replaceable air filter. LH & RH opening doors. Single lever transmission selector. Single lever hydraulic tip control. Combination stalk controls for lights, wipers, horn, direction indicators. Separate side consul for auxiliary switches. Interior light, sun visor, external rear view mirrors, and operator's storage facilities.

Electrical: Road lights front and rear, front working lights, reversing alarm and light, rear fog lights, horn, battery isolator, beacon, radio fittings, 70 amp alternator.

Bodywork: Flexible front steps, non-slip walkways, recovery hitch, lifting lugs (rear body), engine access cover. Rear cab mounted spill guard. Cast 360 deg centre hitch.

Body: Constructed from high strength steel with large box section stiffeners. Large target area and load retention. Two single stage double acting cylinders located within rear chassis.

OPTIONAL EQUIPMENT

Reversing camera; Biodegradable hydraulic oil; Smart reverse alarm; 3" seat belt; Mechanical tail gate; Fire extinguisher; 24-12 volt in cab converter; Air suspension seat with lumber support; Body front extension plate; Number plate kit; LiveLink telematics.

Mixed Sources
Product group from well-managed forests and other controlled sources
www.fsc.org Cert no. TT-COC-002291
© 1996 Forest Stewardship Council
FSC

JCB Sales Limited, Rocester, Staffordshire ST14 5JP. Tel: 01889 590312. Fax: 01889 590588. Web: http://www.jcb.com

JCB reserves the right to change specifications without notice. Illustrations shown may include optional equipment and accessories. The JCB logo is a registered trademark of J C Bamford Excavators Ltd.

9999/4966 01/11 Issue 6

310G 310SG

Engine	310G		310SG	
Type	John Deere 4045D, naturally aspirated standard / John Deere 4045T, turbocharged optional; meets U.S. EPA, CARB, and European NRMM non-road diesel engine emission regulations, effective January 1, 2004		John Deere 4045T, turbocharged; meets U.S. EPA, CARB, and European NRMM non-road diesel engine emission regulations, effective January 1, 2004	
Rated power	75 SAE gross hp (56 kW) / 70 SAE net hp (52 kW) @ 2,300 rpm		92.5 SAE gross hp (69 kW) / 86 SAE net hp (64 kW) @ 2,300 rpm	
John Deere 4045T with turbocharger	84.5 SAE gross hp (63 kW) / 80 SAE net hp (60 kW) @ 2,200 rpm		N/A	
Cylinders	4		4	
Displacement	276 cu. in. (4.524 L)		276 cu. in. (4.524 L)	
Fuel consumption, typical	1.1 to 1.9 gal./hr. (4.2 to 7.2 L/h)		1.3 to 2.3 gal./hr. (4.9 to 8.7 L/h)	
Torque rise	24 percent		38 percent	
With turbocharger	30 percent		N/A	
Maximum net torque	218 lb.-ft. (296 Nm)		277 lb.-ft. (376 Nm)	
With turbocharger	256 lb.-ft. (347 Nm)		N/A	
Lubrication	pressure system with spin-on filter and cooler		pressure system with spin-on filter and cooler	
Air cleaner	dual stage dry type with safety element, evacuator valve, and prescreener		dual stage dry type with safety element and precleaner	
Electrical system	12 volt with 65-amp alternator		12 volt with 65-amp alternator	
Suction-type cooling fan				
Transmission				
Four-speed, helical cut gear, collar-shift transmission synchronized in all gears with hydraulic reverser (optional full-power-shifted transmission on 310SG)				
Torque converter, single stage, dual phase with 2.63:1 stall ratio	11 in. (280 mm)		11 in. (280 mm)	
Travel speeds with 19.5L-24 rear tires	*Forward*	*Reverse*	*Forward*	*Reverse*
Gear 1	3.6 mph (5.8 km/h)	4.0 mph (6.4 km/h)	3.6 mph (5.8 km/h)	4.0 mph (6.4 km/h)
Powershift			3.6 mph (5.8 km/h)	4.0 mph (6.4 km/h)
Gear 2	5.9 mph (9.5 km/h)	6.6 mph (10.6 km/h)	5.9 mph (9.5 km/h)	6.6 mph (10.6 km/h)
Powershift			5.8 mph (9.3 km/h)	6.7 mph (10.8 km/h)
Gear 3	13.9 mph (22.4 km/h)	13.9 mph (22.4 km/h)	13.9 mph (22.4 km/h)	13.9 mph (22.4 km/h)
Powershift			13.9 mph (22.4 km/h)	16.1 mph (25.9 km/h)
Gear 4	20.5 mph (33.0 km/h)	20.5 mph (33.0 km/h)	20.5 mph (33.0 km/h)	20.5 mph (33.0 km/h)
Powershift			20.5 mph (33.0 km/h)	N/A
Final Drives				
Heavy-duty, inboard planetary final drives evenly distribute shock loads over three gears				
Brakes				
Power-assisted, hydraulic wet disc, mounted inboard, self adjusting and self equalizing				
Capacities				
Fuel tank (with ground level fueling)	36 gal. (136 L)		36 gal. (136 L)	
Engine coolant	17 qt. (16 L)		17 qt. (16 L)	
Engine oil including filter	9 qt. (8.5 L)		9 qt. (8.5 L)	
Torque converter and transmission	15 qt. (14 L)		15 qt. (14 L)	
Hydraulic system	24 gal. (91 L)		24 gal. (91 L)	
Rear axle	4.2 gal. (16 L)		4.2 gal. (16 L)	
Mechanical-front-wheel-drive axle	2.3 gal. (8.5 L)		2.3 gal. (8.5 L)	
Steering				
Hydrostatic power steering and emergency steering conform to ISO5010				
Non-powered axle				
Curb turning radius with brakes	10 ft. 7 in. (3.23 m)		10 ft. 7 in. (3.23 m)	
Without brakes	12 ft. 8 in. (3.86 m)		12 ft. 8 in. (3.86 m)	
Bucket clearance circle with brakes	30 ft. 4 in. (9.25 m)		30 ft. 4 in. (9.25 m)	
Without brakes	34 ft. 0 in. (10.4 m)		34 ft. 0 in. (10.4 m)	
Steering wheel turns, stop to stop	3.1		3.1	
Mechanical-front-wheel-drive				
Curb turning radius with brakes	10 ft. 11 in. (3.34 m)		10 ft. 11 in. (3.34 m)	
Without brakes	13 ft. 8 in. (4.17 m)		13 ft. 8 in. (4.17 m)	
Bucket clearance circle with brakes	29 ft. 9 in. (9.07 m)		29 ft. 9 in. (9.07 m)	
Without brakes	35 ft. 3 in. (10.74 m)		35 ft. 3 in. (10.74 m)	
Steering wheel turns, stop to stop	3.0		3.0	
Axle oscillations stop to stop, both axles	22 degrees		22 degrees	
Axle ratings (SAE J43)				
Front	17,340 lb. (7865 kg)		18,860 lb. (8555 kg)	
Rear	12,610 lb. (5720 kg)		13,670 lb. (6200 kg)	
Hydraulic System				
System	open center		open center	
Pressure				
Backhoe	3,625 psi (25 000 kPa)		3,625 psi (25 000 kPa)	
Loader	2,750 psi (19 000 kPa)		3,625 psi (25 000 kPa)	
Pump	gear type		gear type, tandem with unloader	
Flow @ 2,200 rpm	28 gpm (106 L/min.)			
Backhoe			36 gpm (136 L/min.)	
Loader			28 gpm (106 L/min.)	
Filter, return oil	10-micron, spin-on enclosed replaceable element		10-micron, spin-on enclosed replaceable element	

Cylinders

	310G			310SG		
	Bore	*Stroke*	*Rod*	*Bore*	*Stroke*	*Rod*
Loader boom (2)	3.15 in. (80 mm)	31.1 in. (790 mm)	1.97 in. (50 mm)	3.15 in. (80 mm)	31.1 in. (790 mm)	1.97 in. (50 mm)
Loader bucket (1)	3.54 in. (90 mm)	29.3 in. (744 mm)	1.97 in. (50 mm)	3.54 in. (90 mm)	29.3 in. (744 mm)	1.97 in. (50 mm)
Backhoe boom (1)	4.33 in. (110 mm)	32.3 in. (821 mm)	2.20 in. (56 mm)	4.72 in. (120 mm)	31.3 in. (795 mm)	2.20 in. (56 mm)
Backhoe crowd (1)	4.33 in. (110 mm)	22.3 in. (566 mm)	2.20 in. (56 mm)	4.53 in. (115 mm)	23.9 in. (607 mm)	2.48 in. (63 mm)
Backhoe bucket (1)	3.15 in. (80 mm)	35.1 in. (892 mm)	1.97 in. (50 mm)	3.54 in. (90 mm)	31.9 in. (810 mm)	2.20 in. (56 mm)
Backhoe bucket heavy-duty option (1)				3.94 in. (100 mm)	31.9 in. (810 mm)	2.48 in. (63 mm)
Backhoe swing (2)	3.15 in. (80 mm)	12.2 in. (310 mm)	1.77 in. (45 mm)	3.54 in. (90 mm)	10.9 in. (278 mm)	1.97 in. (50 mm)
Backhoe extendable dipperstick (1)	2.48 in. (63 mm)	41.8 in. (1062 mm)	1.26 in. (32 mm)	2.76 in. (70 mm)	42.0 in. (1067 mm)	1.77 in. (45 mm)
Backhoe stabilizer (2)	3.15 in. (80 mm)	19.7 in. (500 mm)	1.97 in. (50 mm)	3.54 in. (90 mm)	19.7 in. (500 mm)	1.97 in. (50 mm)
Steering (1) non-powered axle	1.97 in. (50 mm)	9.49 in. (241 mm)	0.98 in. (25 mm)	1.97 in. (50 mm)	9.49 in. (241 mm)	0.98 in. (25 mm)
Steering (1) MFWD	2.56 in. (65 mm)	8.27 in. (210 mm)	1.42 in. (36 mm)	2.56 in. (65 mm)	8.27 in. (210 mm)	1.42 in. (36 mm)

Tires

	Rear	*Front*	*Rear*	*Front*
With non-powered front axle	16.9-24, 8 PR R4	11L-15, 8 PR F3	16.9-24, 8 PR R4	11L-15, 8 PR F3
	17.5L-24, 10 PR R4	11L-15, 8 PR F3	19.5L-24, 8 PR R4	11L-16, 12 PR F3
	19.5L-24, 8 PR R4	11L-16, 12 PR F3		
With mechanical-front-wheel-drive	16.9-24, 8 PR R4	12-16.5, 8 PR NHS	19.5L-24, 8 PR R4	12.5/80-18, 10 PR
	19.5L-24, 8 PR R4	12-16.5, 8 PR NHS		

SAE Operating Weights

With 17.5L-24, 10 PR R4 rear tires; 11L-15, 8 PR F3 front tires; 1.00-cu. yd. (0.76 m^3) loader bucket; and 24-in. x 6.5-cu. ft. (610 mm x 0.18 m^3) backhoe bucket standard	12,800 lb. (5806 kg)	
With 19.5L-24, 8 PR R4 rear tires; 11L-16, 12 PR F3 front tires; 1.12-cu. yd. (0.86 m^3) loader bucket; and 24-in. x 7.5-cu. ft. (610 mm x 0.21 m^3) backhoe bucket standard		13,500 lb. (6124 kg)
Cab adds	580 lb. (263 kg)	580 lb. (263 kg)
Mechanical-front-wheel-drive with tires adds	370 lb. (168 kg)	485 lb. (220 kg)
Extendable dipperstick excluding required counterweight adds	440 lb. (200 kg)	490 lb. (222 kg)
Typical operating weight with cab, MFWD with tires, extendable dipperstick, and two counterweights equaling 900 lb. (408 kg)	15,090 lb. (6845 kg)	15,955 lb. (7237 kg)
Backhoe bucket coupler adds	130 lb. (59 kg)	138 lb. (63 kg)

See backhoe and loader performance data for bucket weights.

Loader Buckets

	Width	*Heaped Capacity*	*Weight*	*Width*	*Heaped Capacity*	*Weight*
Heavy-duty long lip*	86 in. (2180 mm)	1.00 cu. yd. (0.76 m^3)	710 lb. (322 kg)			
Heavy-duty long lip**	86 in. (2180 mm)	1.12 cu. yd. (0.86 m^3)	940 lb. (426 kg)	86 in. (2180 mm)	1.25 cu. yd. (0.96 m^3)	875 lb. (397 kg)
				92 in. (2340 mm)	1.30 cu. yd. (1.00 m^3)	1,050 lb. (476 kg)
Heavy-duty long lip	86 in. (2180 mm)	1.25 cu. yd. (0.96 m^3)	875 lb. (397 kg)			
Multipurpose**	82 in. (2078 mm)	1.18 cu. yd. (0.91 m^3)	1,664 lb. (755 kg)			
	86 in. (2180 mm)	1.25 cu. yd. (0.96 m^3)	1,713 lb. (777 kg)	82 in. (2080 mm)	1.18 cu. yd. (0.91 m^3)	1,664 lb. (755 kg)
				86 in. (2180 mm)	1.25 cu. yd. (0.96 m^3)	1,713 lb. (777 kg)
				92 in. (2340 mm)	1.32 cu. yd. (1.01 m^3)	1,800 lb. (816 kg)

*Pre-drilled for auxiliary cutting edge.
**With auxiliary cutting edge and skid shoes standard.

Backhoe Performance

	*With Standard Backhoe**	*With Extendable Dipperstick** Retracted	*Extended*	*With Standard Backhoe***	*With Extendable Dipperstick*** Retracted	*Extended*
Digging force, bucket cylinder	11,106 lb. (49.4 kN)	11,211 b. (49.9 kN)	11,211 lb. (49.9 kN)	11,990 lb. (53.3 kN)	12,158 lb. (54.1 kN)	12,158 lb. (54.1 kN)
With heavy-duty cylinder option				15,236 lb. (67.7 kN)	15,308 lb. (68.0 kN)	15,308 lb. (68.0 kN)
Digging force, crowd cylinder	7,006 lb. (31.2 kN)	6,782 lb. (30.2 kN)	4,844 lb. (21.5 kN)	8,090 lb. (36.0 kN)	7,796 lb. (34.7 kN)	5,628 lb. (25.0 kN)
Swing arc	180 degrees	180 degrees	180 degrees	180 degrees	180 degrees	180 degrees
Operator control	two levers	right foot treadle	right foot treadle	two levers	right foot treadle	right foot treadle
Bucket rotation	190 degrees	190 degrees	190 degrees	190 degrees	190 degrees	190 degrees
Stabilizer angle rearward	18 degrees	18 degrees	18 degrees	18 degrees	18 degrees	18 degrees
Leveling angle	14 degrees	14 degrees	14 degrees	14 degrees	14 degrees	14 degrees

*Backhoe specifications are with 24-in. x 6.5-cu. ft. (610 mm x 0.18 m^3) bucket.
**Backhoe specifications are with 24-in. x 7.5-cu. ft. (610 mm x 0.21 m^3) bucket.

Backhoe Buckets

	Width	*Capacity*	*Weight*	*Width*	*Capacity*	*Weight*
Standard duty	18 in. (457 mm)	4.6 cu. ft. (0.13 m^3)	260 lb. (118 kg)			
	24 in. (610 mm)	6.5 cu. ft. (0.18 m^3)	300 lb. (136 kg)	24 in. (610 mm)	7.5 cu. ft. (0.21 m^3)	350 lb. (159 kg)
Heavy duty with lift loop	12 in. (305 mm)	2.8 cu. ft. (0.11 m^3)	240 lb. (109 kg)	12 in. (305 mm)	3.3 cu. ft. (0.09 m^3)	295 lb. (134 kg)
	18 in. (457 mm)	5.1 cu. ft. (0.14 m^3)	335 lb. (152 kg)	18 in. (457 mm)	5.1 cu. ft. (0.14 m^3)	335 lb. (152 kg)
	24 in. (610 mm)	7.5 cu. ft. (0.21 m^3)	400 lb. (181 kg)	24 in. (610 mm)	7.5 cu. ft. (0.21 m^3)	400 lb. (181 kg)
				24 in. (610 mm)	8.8 cu. ft. (0.25 m^3)	420 lb. (191 kg)
	30 in. (762 mm)	10.0 cu. ft. (0.28 m^3)	445 lb. (202 kg)	30 in. (762 mm)	10.0 cu. ft. (0.28 m^3)	445 lb. (202 kg)
				36 in. (914 mm)	12.5 cu. ft. (0.35 m^3)	510 lb. (231 kg)
Severe duty with lift loop				18 in. (457 mm)	5.1 cu. ft. (0.14 m^3)	362 lb. (164 kg)
				24 in. (610 mm)	7.5 cu. ft. (0.21 m^3)	425 lb. (193 kg)
				24 in. (610 mm)	8.8 cu. ft. (0.25 m^3)	455 lb. (206 kg)
				30 in. (762 mm)	10.0 cu. ft. (0.28 m^3)	475 lb. (215 kg)
Ditch cleaning				36 in. (914 mm)	12.5 cu. ft. (0.35 m^3)	510 lb. (231 kg)

310G Backhoe Loader

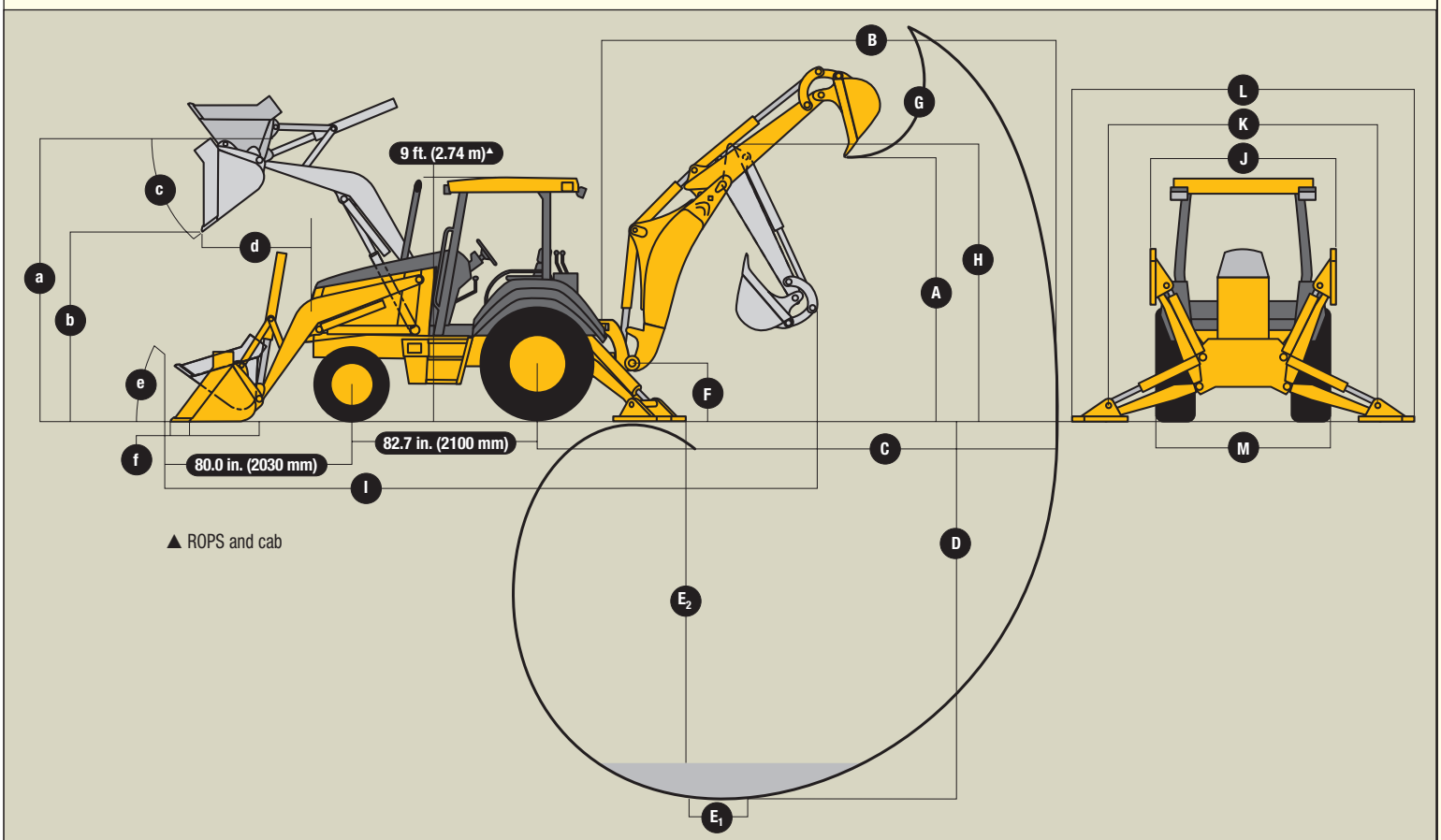

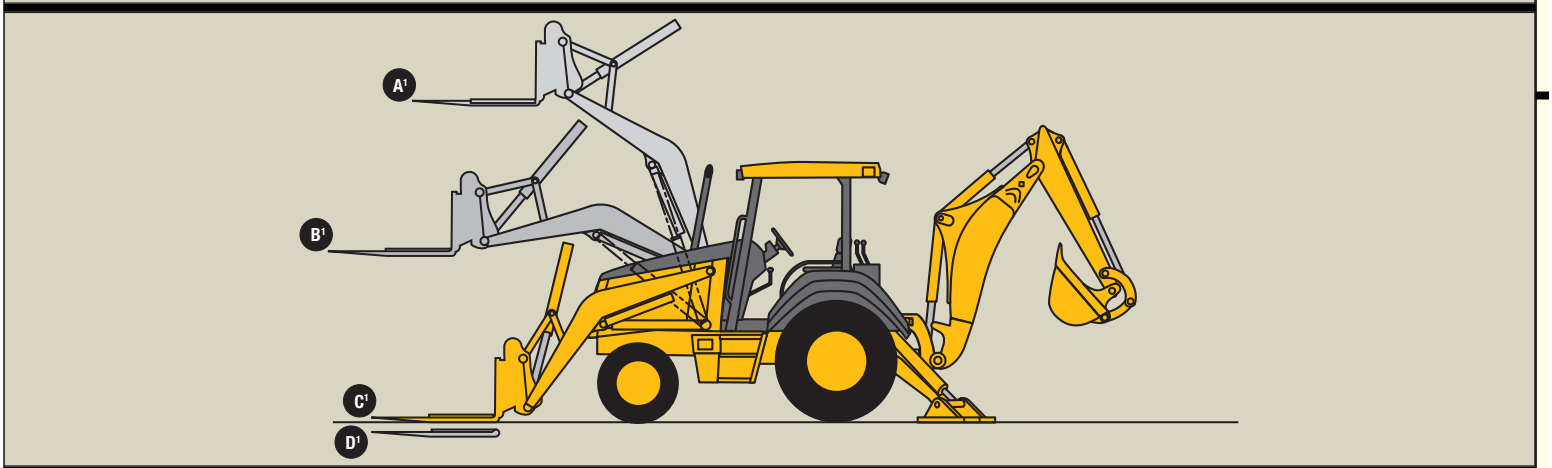

Lift Capacity with Quick-Coupler/Forks — 310G

A1	Maximum height	3,685 lb. (1673 kg)
B1	Maximum reach	5,570 lb. (2528 kg)
C1	At ground line	7,310 lb. (3319 kg)
D1	Below ground line	4.4 in. (112.7 mm) to bottom of tine / 2.7 in. (68.3 mm) to top of tine

Backhoe — 310G

		With Standard Backhoe*	With Extendable Dipperstick* Retracted	Extended
A	Loading height, truck loading position	10 ft. 11 in. (3.33 m)	11 ft. 1 in. (3.38 m)	13 ft. 11 in. (4.24 m)
B	Reach from center of swing pivot	17 ft. 10 in. (5.44 m)	18 ft. 1 in. (5.51 m)	21 ft. 5 in. (6.53 m)
C	Reach from center of rear axle	21 ft. 4 in. (6.50 m)	21 ft. 7 in. (6.58 m)	24 ft. 11 in. (7.59 m)
D	Maximum digging depth	14 ft. 3 in. (4.34 m)	14 ft. 5 in. (4.39 m)	17 ft. 11 in. (5.46 m)
E	Digging depth (SAE):			
	(1) 2-ft. (610 mm) flat bottom	14 ft. 2 in. (4.32 m)	14 ft. 4 in. (4.37 m)	17 ft. 10 in. (5.44 m)
	(2) 8-ft. (2440 mm) flat bottom	13 ft. (3.96 m)	13 ft. 4 in. (4.06 m)	17 ft. (5.18 m)
F	Ground clearance, minimum	12 in. (305 mm)	12 in. (305 mm)	12 in. (305 mm)
G	Bucket rotation	190 degrees	190 degrees	190 degrees
H	Transport height	11 ft. 3 in. (3.43 m)	11 ft. 2 in. (3.40 m)	11 ft. 2 in. (3.40 m)
I	Overall length, transport	23 ft. 3 in. (7.09 m)	23 ft. 3 in. (7.09 m)	23 ft. 3 in. (7.09 m)
J	Stabilizer width – transport with ROPS	7 ft. 2 in. (2.18 m)	7 ft. 2 in. (2.18 m)	7 ft. 2 in. (2.18 m)
K	Stabilizer spread – operating	10 ft. 2 in. (3.10 m)	10 ft. 2 in. (3.10 m)	10 ft. 2 in. (3.10 m)
L	Stabilizer overall width – operating	11 ft. 7 in. (3.53 m)	11 ft. 7 in. (3.53 m)	11 ft. 7 in. (3.53 m)
M	Width over tires	81.7 in. (2.07 m)	81.7 in. (2.07 m)	81.7 in. (2.07 m)

*Backhoe specifications are with 24-in. x 6.5-cu. ft. (610 mm x 0.18 m^3) bucket.

310G Loader Performance with Bucket Options

		1.00-cu. yd. (0.76 m^3) Heavy-Duty Long Lip	1.12-cu. yd. (0.86 m^3) Heavy-Duty Long Lip	1.25-cu. yd. (0.96 m^3) Heavy-Duty Long Lip	1.12-cu. yd. (0.86 m^3) Multipurpose	1.18-cu. yd. (0.91 m^3) Multipurpose	1.25-cu. yd. (0.96 m^3) Multipurpose
	Operator control	single lever	single lever	single lever	single lever	single lever	single lever
	Breakout force	8,100 lb. (36.0 kN)	7,950 lb. (35.4 kN)	7,603 lb. (33.8 kN)	7,125 lb. (31.7 kN)	7,175 lb. (31.9 kN)	7,125 lb. (31.7 kN)
	Lifting capacity, full height	5,800 lb. (2631 kg)	5,600 lb. (2540 kg)	5,558 lb. (2523 kg)	5,100 lb. (2313 kg)	5,150 lb. (2335 kg)	5,100 lb. (2313 kg)
a	Height to bucket hinge pin, maximum	11 ft. 1 in. (3.38 m)	11 ft. 1 in. (3.38 m)	11 ft. 1 in. (3.38 m)	11 ft. 1 in. (3.38 m)	11 ft. 1 in. (3.38 m)	11 ft. 1 in. (3.38 m)
b	Dump clearance, bucket at 45 degrees	8 ft. 10 in. (2.69 m)	8 ft. 10 in. (2.69 m)	8 ft. 2 in. (2.59 m)	8 ft. 6 in. (2.59 m)	8 ft. 6 in. (2.59 m)	8 ft. 6 in. (2.59 m)
c	Bucket dump angle, maximum	45 degrees	45 degrees	45 degrees	45 degrees	45 degrees	45 degrees
d	Reach at full height, bucket at 45 degrees	30.9 in. (785 mm)	30.2 in. (767 mm)	31.9 in. (809 mm)	32.2 in. (818 mm)	32.2 in. (818 mm)	32.2 in. (818 mm)
e	Rollback angle at ground level	40 degrees	40 degrees	40 degrees	40 degrees	40 degrees	40 degrees
f	Digging depth below ground, bucket level	6.3 in. (160 mm)	6.9 in. (175 mm)	5.8 in. (147 mm)	7.8 in. (197 mm)	7.8 in. (197 mm)	7.8 in. (197 mm)
	Raising time to full height	5.2 sec.	5.2 sec.	5.2 sec.	5.2 sec.	5.2 sec.	5.2 sec.
	Bucket dump time	1.1 sec.	1.1 sec.	1.1 sec.	1.1 sec.	1.1 sec.	1.1 sec.
	Bucket lowering time (power down)	1.9 sec.	1.9 sec.	1.9 sec.	1.9 sec.	1.9 sec.	1.9 sec.

Lift capacities are over-end values in lb. (kg) according to SAE J31. Figures listed are 87% of the maximum lift force available. Base vehicle includes counterweight.

310G Backhoe with Standard Dipperstick

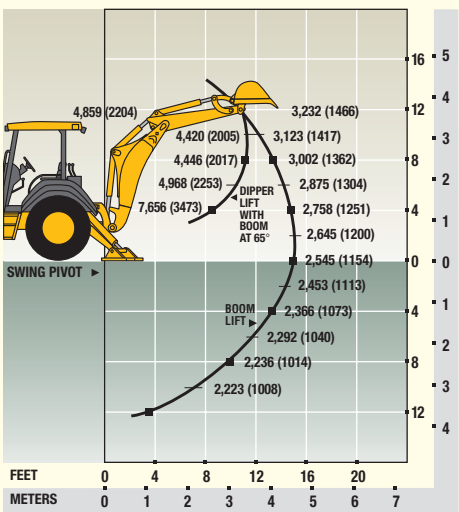

310G Backhoe with 3-ft. 6-in. (1.07 m) Extendable Dipperstick, Retracted

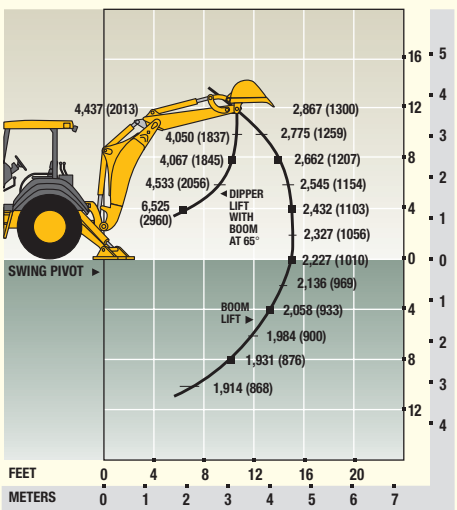

310G Backhoe with 3-ft. 6-in. (1.07 m) Extendable Dipperstick, Extended

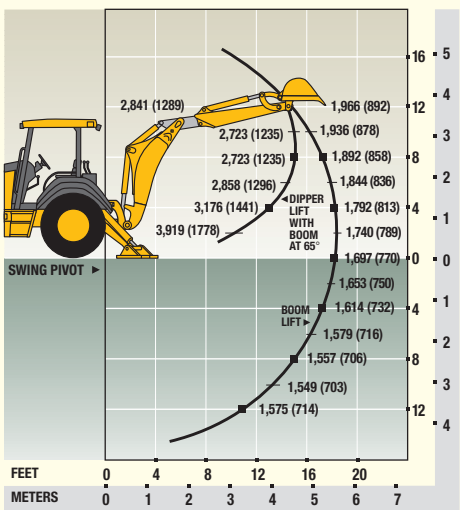

310SG Backhoe Loader

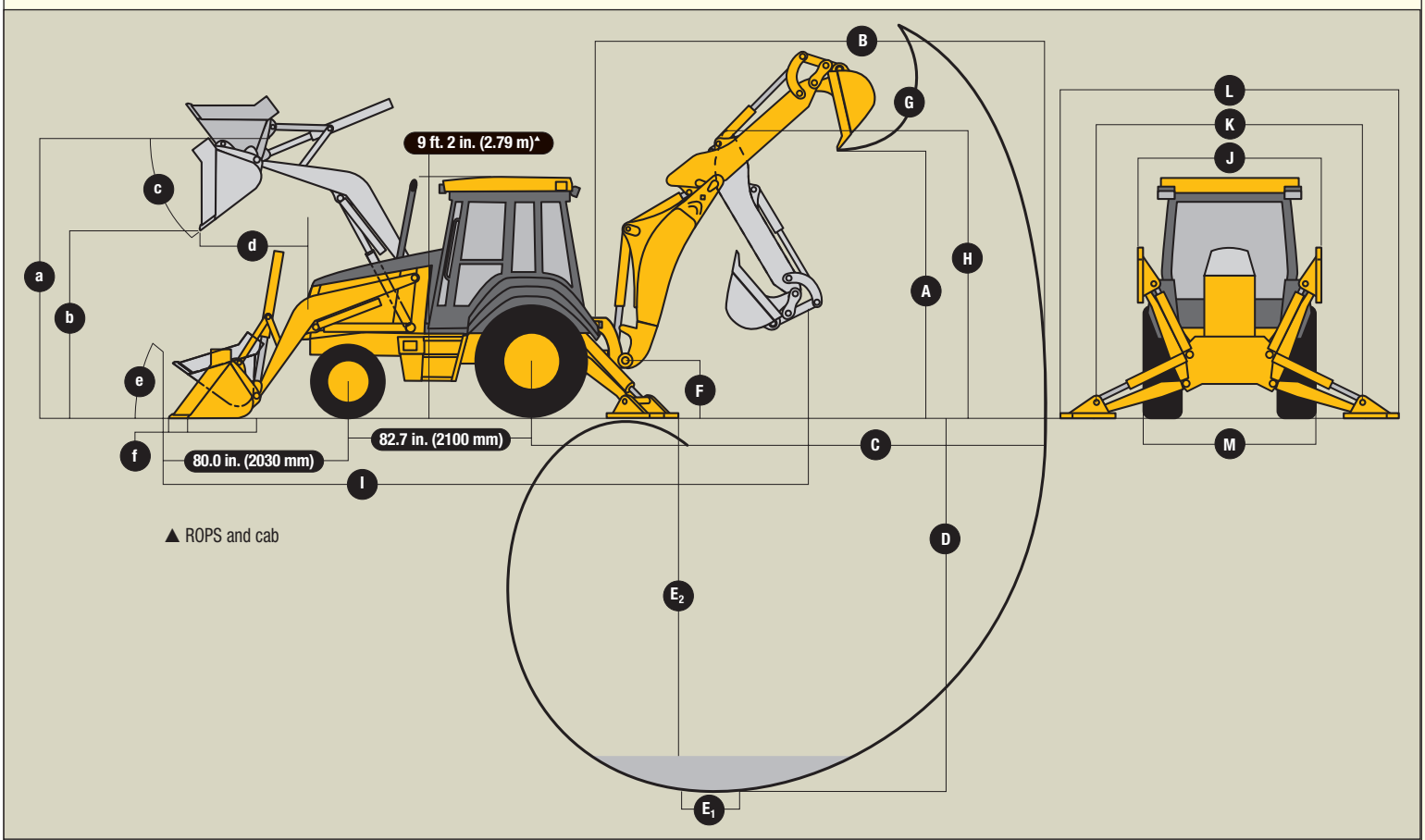

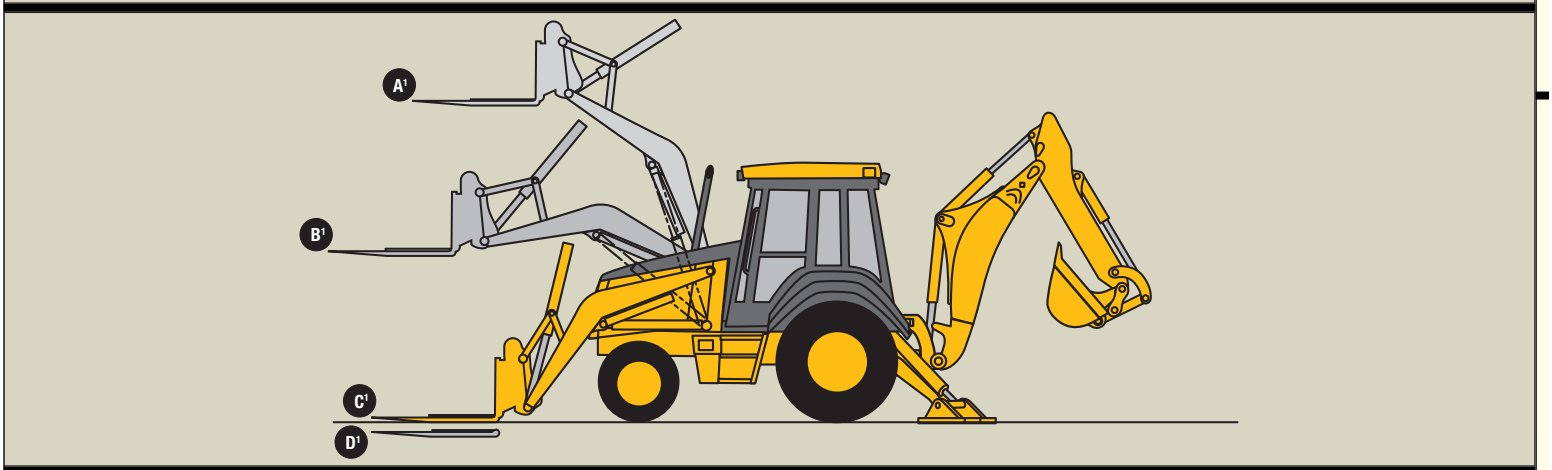

Lift Capacity with Quick-Coupler/Forks — 310SG

A1	Maximum height	5,038 lb. (2287 kg)
B1	Maximum reach	7,462 lb. (3388 kg)
C1	At ground line	9,853 lb. (4473 kg)
D1	Below ground line	4.4 in. (112.7 mm) to bottom of tine / 2.7 in. (68.3 mm) to top of tine

Backhoe — 310SG

		With Standard Backhoe*	With Extendable Dipperstick* Retracted	Extended
A	Loading height, truck loading position	11 ft. 3 in. (3.43 m)	11 ft. 7 in. (3.53 m)	14 ft. 1 in. (4.29 m)
B	Reach from center of swing pivot	18 ft. 3 in. (5.56 m)	18 ft. 7 in. (5.66 m)	21 ft. 11 in. (6.68 m)
C	Reach from center of rear axle	21 ft. 9 in. (6.63 m)	22 ft. 1 in. (6.73 m)	25 ft. 4 in. (7.72 m)
D	Maximum digging depth	14 ft. 6 in. (4.42 m)	14 ft. 11 in. (4.55 m)	18 ft. 5 in. (5.61 m)
E	Digging depth (SAE):			
	(1) 2-ft. (610 mm) flat bottom	14 ft. 4 in. (4.37 m)	14 ft. 9 in. (4.50 m)	18 ft. 3 in. (5.56 m)
	(2) 8-ft. (2440 mm) flat bottom	13 ft. 4 in. (4.06 m)	13 ft. 9 in. (4.19 m)	17 ft. 6 in. (5.33 m)
F	Ground clearance, minimum	13 in. (330 mm)	13 in. (330 mm)	13 in. (330 mm)
G	Bucket rotation	190 degrees	190 degrees	190 degrees
H	Transport height	11 ft. 6 in. (3.51 m)	11 ft. 5 in. (3.48 m)	11 ft. 5 in. (3.48 m)
I	Overall length, transport	23 ft. 6 in. (7.16 m)	23 ft. 6 in. (7.16 m)	23 ft. 6 in. (7.16 m)
J	Stabilizer width – transport with ROPS	7 ft. 2 in. (2.18 m)	7 ft. 2 in. (2.18 m)	7 ft. 2 in. (2.18 m)
K	Stabilizer spread – operating	10 ft. 2 in. (3.10 m)	10 ft. 2 in. (3.10 m)	10 ft. 2 in. (3.10 m)
L	Stabilizer overall width – operating	11 ft. 7 in. (3.53 m)	11 ft. 7 in. (3.53 m)	11 ft. 7 in. (3.53 m)
M	Width over tires	86 in. (2.18 m)	86 in. (2.18 m)	86 in. (2.18 m)

*Backhoe specifications are with 24-in. x 7.5-cu. ft. (610 mm x 0.21 m^3) bucket.

310SG Loader Performance with Bucket Options

		1.25-cu. yd. (0.96 m^3) Heavy-Duty Long Lip	1.30-cu. yd. (1.00 m^3) Heavy-Duty Long Lip	1.18-cu. yd. (0.91 m^3) Multipurpose	1.25-cu. yd. (0.96 m^3) Multipurpose	1.32-cu. yd. (1.01 m^3) Multipurpose
	Operator control	single lever	single lever	single lever	single lever	single lever
	Breakout force	10,210 lb. (45.4 kN)	10,300 lb. (45.8 kN)	9,750 lb. (43.4 kN)	9,700 lb. (43.1 kN)	9,650 lb. (42.9 kN)
	Lifting capacity, full height	7,340 lb. (3332 kg)	7,200 lb. (3266 kg)	6,750 lb. (3061 kg)	6,700 lb. (3039 kg)	6,600 lb. (2993 kg)
a	Height to bucket hinge pin, maximum	11 ft. 2 in. (3.40 m)	11 ft. 2 in. (3.40 m)	11 ft. 2 in. (3.40 m)	11 ft. 2 in. (3.40 m)	11 ft. 2 in. (3.40 m)
b	Dump clearance, bucket at 45 degrees	8 ft. 2 in. (2.59 m)	8 ft. 8 in. (2.64 m)	8 ft. 7 in. (2.62 m)	8 ft. 7 in. (2.62 m)	8 ft. 7 in. (2.62 m)
c	Bucket dump angle, maximum	45 degrees	45 degrees	45 degrees	45 degrees	45 degrees
d	Reach at full height, bucket at 45 degrees	36.0 in. (911 mm)	30.1 in. (765 mm)	32.2 in. (818 mm)	32.2 in. (818 mm)	32.2 in. (818 mm)
e	Rollback angle at ground level	40 degrees	40 degrees	40 degrees	40 degrees	40 degrees
f	Digging depth below ground, bucket level	5.8 in. (147 mm)	8.1 in. (206 mm)	7.3 in. (185 mm)	7.3 in. (185 mm)	7.3 in. (185 mm)
	Raising time to full height	4.9 sec.	4.9 sec.	4.9 sec.	4.9 sec.	4.9 sec.
	Bucket dump time	1.1 sec.	1.1 sec.	1.1 sec.	1.1 sec.	1.1 sec.
	Bucket lowering time (power down)	1.9 sec.	1.9 sec.	1.9 sec.	1.9 sec.	1.9 sec.

Lift capacities are over-end values in lb. (kg) according to SAE J31. Figures listed are 87% of the maximum lift force available. Base vehicle includes counterweight.

310SG Backhoe with Standard Dipperstick

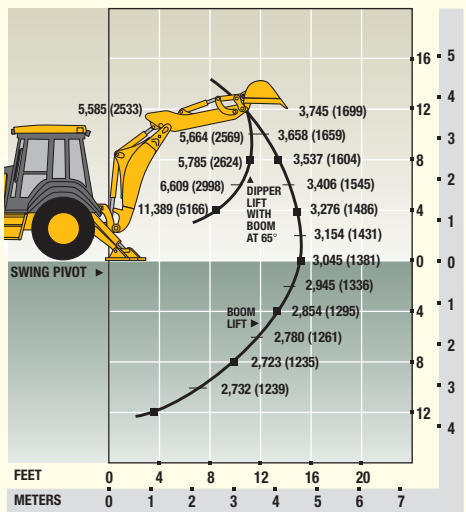

310SG Backhoe with 3-ft. 6-in. (1.07 m) Extendable Dipperstick, Retracted

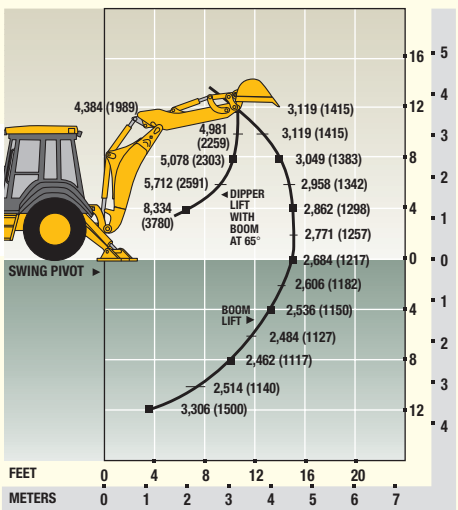

310SG Backhoe with 3-ft. 6-in. (1.07 m) Extendable Dipperstick, Extended

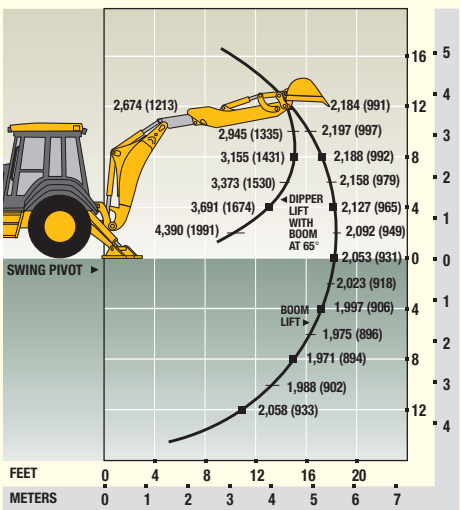

310G / 310SG / 410G / 710G Backhoe Loaders

Key: ● Standard equipment ▲ Optional or special equipment

*See your John Deere dealer for further information.

310G	310SG	410G	710G	Engine
●				John Deere Model 4045D – 4.5 liter, 70 SAE net hp naturally aspirated, isolation mounted
▲				John Deere Model 4045T – 4.5 liter, 80 SAE net hp turbocharged, isolation mounted
	●			John Deere Model 4045T – 4.5 liter, 86 SAE net hp turbocharged, isolation mounted
		●		John Deere Model 4045T – 4.5 liter, 92 SAE net hp turbocharged, isolation mounted
			●	John Deere Model 6068T – 6.8 liter, 118 SAE net hp turbocharged, isolation mounted
●	●	●	●	Vertical spin-on engine oil filter
●	●	●	●	Vertical spin-on fuel filter with water separator
▲	▲	●	●	Vertical spin-on secondary fuel filter
●	●	●	●	Oil-to-water engine oil cooler
●	●	●	●	Antifreeze, –34°F (–37°C)
●	●	●	●	Coolant recovery tank
●	●	●	●	Serpentine belt with automatic belt tensioner
●	●	●	●	Suction-type cooling fan
●	●	●	●	Enclosed safety fan guard
	▲	▲	▲	High ambient temperature engine cooling
●	●	●	●	Dual-element dry-type air cleaner with evacuator valve and prescreener
●	●	●	●	Muffler, underhood with curved-end exhaust stack
	▲	▲	▲	Chrome exhaust extension
▲	▲	▲	▲	Electric ether starting aid
▲	▲	▲	▲	Engine coolant heater, 1,000 watts
				Power Train
●	▲			Collar-shift transmission with torque converter: Fully synchronized four forward, four reverse speeds / Isolation mounted to mainframe
	●	●	●	Powershift transmission: Torque converter with electrically actuated twist grip F-N-R in 1st through 4th gears
●	●	●	●	Transmission oil cooler
●	●	●	●	Vertical spin-on transmission filter
●	●	●	●	Electric forward-neutral-reverse control lever with neutral safety switch interlock
●	●	●	●	Electric clutch cutoff on gearshift and loader levers
●	●	●	●	Differential lock, electric foot-actuated
●	●	●	●	Planetary final drives
●	●	●	●	Power-assisted hydraulic service brakes (conform to SAE J1473): Inboard, wet multi-disc, self adjusting and self equalizing
●	●	●	●	Parking/emergency brake with electric switch control (conforms to SAE J1473): Spring applied, hydraulically released wet multi-disc / Independent of service brakes
●	●	●	●	Hydrostatic power steering with emergency manual mode
●	●	●	●	Non-powered front axle
▲				Mechanical-front-wheel-drive: Electric on/off control / Drive-shaft guard / Sealed axle
	▲	▲	▲	Mechanical-front-wheel-drive with limited-slip differential: Electric on/off control / Drive-shaft guard / Sealed axle
●	●			11L-15 F3 front tires
▲	▲	●		11L-16 F3 front tires
▲				12-16.5 traction front tires
	▲	▲		12.5/80-18 traction front tires
		▲	▲	14.5/75-16.1 F3 front tires
●	●			16.9-24 R4 rear tires
▲				17.5L-24 R4 rear tires
▲	▲	●		19.5L-24 R4 rear tires
		▲		21L-24 R4 rear tires
			▲	15-19.5 SS-1 front tires
			▲	16.5L-16.1 L-1 front tires
			●	21L-28 R4 rear tires
			▲	20.5-25 L-2 rear tires
▲	▲	▲	▲	Rear wheel spacers for use with chains
				Backhoe
●				Backhoe with standard dipperstick, 14-ft. 3-in. digging depth
	●			Backhoe with standard dipperstick, 14-ft. 6-in. digging depth
		●		Backhoe with standard dipperstick, 15-ft. 10-in. digging depth
			●	Backhoe with standard dipperstick, 18-ft. 2-in. digging depth

310G	310SG	410G	710G	Backhoe *(continued)*
●	●	●	●	Two-lever (Deere) backhoe controls
▲	▲	▲	▲	Three-lever (Case) backhoe controls
▲	▲	▲		Four-lever (Ford) backhoe controls
▲	▲	▲	▲	SAE excavator two-lever backhoe controls
●	●	●	●	Backhoe transport lock lever
●	●	●	●	Swing lock pin stored in operator's station
●	●	●	●	Stabilizer valve with two-direction anti-drift valves
●	●	●	●	Pivoting stabilizers with reversible pads
	▲			Extended stabilizers*
▲	▲	▲	▲	Stabilizer cylinder guards
●	●	●	●	Less bucket, with bucket pins
▲	▲	▲		Standard-duty backhoe bucket with lift loops
▲	▲	▲	▲	Heavy-duty backhoe bucket with lift loops
	▲	▲		Severe-duty backhoe bucket with lift loops
▲	▲	▲	▲	Backhoe coupler for "C," "D," "E," and "G" Series John Deere buckets, Case buckets, and Cat buckets
▲	▲			Extendable dipperstick, 3-ft. 6-in. extension
		▲		Extendable dipperstick, 4-ft. extension
			▲	Extendable dipperstick, 5-ft. extension
▲	▲	▲	▲	Auxiliary backhoe valve for swingers, thumbs, etc.
▲	▲	▲	▲	Auxiliary backhoe valve for hammers, compactors
▲	▲	▲		Auxiliary backhoe plumbing for hammers, compactors
▲	▲	▲	▲	Auxiliary backhoe plumbing for swingers, thumbs, etc.
▲	▲	▲	▲	SAE-controlled load-lowering device valves
				Loader
●	●	●	●	Hydraulic self leveling
●	●	●	●	Return-to-dig feature
●	●	●	●	Single-lever control with electric clutch cutoff switch
●	●	●	●	Bucket-level indicator
●	●	●	●	Loader boom service lock
▲	▲	▲	▲	Ride control
▲	▲	▲	▲	Auxiliary loader hydraulics with two-lever control
▲	▲	▲		Hydraulic coupler for buckets, forks, etc.
			▲	Loader front coupler*
●	●	●	●	Less bucket, with bucket pins
▲				Heavy-duty loader bucket with lift loops, pre-punched for bolt-on cutting edge
▲	▲	▲	▲	Heavy-duty loader buckets with bolt-on cutting edges, skid plates, and lift loops
▲	▲	▲	▲	Multipurpose loader buckets with bolt-on cutting edges, skid plates, and lift loops
				Hydraulic System
●				28-gpm (106 L/min.) gear pump, open-center system
	●			36-gpm (136 L/min.) tandem gear pump, open-center system
		●		42-gpm (159 L/min.) axial piston pump, PCLS system
			●	52-gpm (197 L/min.) axial piston pump, PCLS system
●	●	●	●	Independent hydraulic reservoir
●	●	●		Swing-down hydraulic oil cooler
●	●	●	●	"O"-ring face seal connectors
●	●	●	●	10-micron vertical spin-on filter
				Electrical
●	●	●	●	12-volt system
●	●	●	●	65-amp alternator
●	●	●		Single battery with 190-min. reserve capacity and 950 CCA
▲	▲	▲	●	Dual batteries with 380-min. reserve capacity and 1,900 CCA
●	●	●	●	Positive terminal battery cover
●	●	●	●	Blade-type multi-fused circuits
●	●	●	●	By-pass start safety cover on starter
				Lights
●	●	●	●	Four halogen driving/work lights, 32,500 candle-power each (two front and two rear)
▲	▲	▲	▲	Six additional halogen work lights, 32,500 candle-power each (two front, two rear, and two side)
●	●	●	●	Two front and two rear turn signal/flashing
●	●	●	●	Two rear stop and tail
●	●	●	●	Two rear reflectors
▲	▲	▲	▲	Rotating beacon

310G	310SG	410G	710G	Operator's Station
●	●	●	●	Modular-design ROPS/FOPS canopy with molded roof (conforms to SAE J1040): Isolation mounted
●	●	●	●	Left and right access
●	●	●	●	Slip-resistant steps and ergonomically located handholds
	●	●		Molded floor mat
	●	●	●	Headliner
●	●	●	●	Coat hook
●	●	●	●	12-volt outlets (2)
●	●	●	●	Built-in beverage holders
●	●	●	●	Built-in Operator's Manual storage compartment with manual
●	●	●	●	Interior rearview mirror
▲	▲	▲	▲	Outside rearview mirrors
●	●	●	●	Hand throttle with fuel-economy setting at 2,100 rpm
●	●	●	●	Suspended foot throttle
	▲	▲	▲	Tilt steering
●	●	●	●	Horn
●	●	●	●	Key start switch with electric fuel shutoff
●	●	●		Engine coolant temperature gauge, illuminated electronic, with audible warning
●	●	●		Oil temperature gauge, illuminated electronic, with audible warning
●	●	●	●	Fuel gauge, illuminated electronic
●	●	●		Digital display of engine hours, engine rpm, and system voltage
●	●	●	●	Monitor system with audible and visual warnings: Engine air restriction indicator / Engine oil pressure indicator with audible warning / Hydraulic filter restriction indicator / Parking brake on/off indicator with audible warning / Seat belt indicator / Low brake pressure
●	●	●	●	Non-suspension vinyl swivel seat without armrests
▲	▲	▲	▲	Suspension vinyl swivel seat with armrests and lumbar support
▲	▲	▲	▲	Suspension fabric swivel seat with armrests and lumbar support
▲	▲	▲		Air suspension vinyl swivel seat with armrests and lumbar support
▲	▲	▲		Air suspension fabric swivel seat with armrests and lumbar support
●	●	●	●	2-in. seat belt with retractors
▲	▲	▲	▲	3-in. seat belt with retractors
▲	▲	▲	▲	Cab: Headliner, dome light, left and right cab doors, tinted safety glass, one rear and one front windshield wiper, fresh air intake heater/defroster/pressurizer (40,000-Btu/hr. [11.7 kW] heater), and 65-amp alternator standard / Front windshield washer, air conditioning (26,000-Btu/hr. [7.6 kW] output and CFC-free R134a refrigerant), 95-amp alternator, and AM/FM/weatherband radio optional / 12-volt outlets (3)
				Overall Vehicle
●	●	●	●	One-piece unitized construction mainframe
●	●	●	●	Vehicle tiedowns, two front and one rear
●	●	●	●	Remote grease bank for front axle
●	●	●		Rigid-mounted front bumper
▲	▲	▲		400-lb. (181 kg) front counterweight
▲	▲	▲		650-lb. (295 kg) front counterweight
▲	▲	▲		900-lb. (408 kg) front counterweight
			●	1,070-lb. (486 kg) front counterweight
▲	▲	▲		1,150-lb. (522 kg) front counterweight
▲	▲	▲		1,400-lb. (635 kg) front counterweight
			▲	1,770-lb. (804 kg) front counterweight
●	●	●		Fuel tank, 36 gal. (136 L), ground-level fueling
			●	Fuel tank, 44 gal. (166 L), ground-level fueling
●	●	●	●	Two-position easy-tilt hood
▲	▲	▲	▲	Front grille screen
●	●	●	●	Vandal protection for instrument panel, engine hood, toolbox, hydraulic reservoir, radiator, and fuel tank
●	●	●	●	Reverse warning alarm: Switchable to 97 dB(A) or 111 dB(A)
●	●	●	●	Dent-resistant full-coverage rear fenders
▲	▲	▲	▲	Front fenders*
▲	▲	▲	▲	SMV emblem
▲	▲	▲	▲	Rental decal kit
▲	▲	▲	▲	Special color paint*

JOHN DEERE

Net engine power is with standard equipment including air cleaner, exhaust system, alternator, and cooling fan, at standard conditions per SAE J1349 and DIN 70 020, using No. 2-D fuel at 35 API gravity. No derating is required up to 5,000-ft. (1500 m) altitude for the 310G and up to 10,000-ft. (3050 m) for the 310G with optional altitude-compensating turbocharger, the 310SG, the 410G, and the 710G. Gross power is without cooling fan.

Specifications and design subject to change without notice. Wherever applicable, specifications are in accordance with SAE standards. Except where otherwise noted, these specifications are based on a 310G unit with 17.5L-24, 10 PR R4 rear tires, 11L-15, 8 PR F3 front tires, 1.00-cu. yd. (0.76 m^3) loader bucket, and 24-in. x 6.5-cu. ft. (610 mm x 0.18 m^3) backhoe bucket; a 310SG unit with 19.5L-24, 8 PR R4 rear tires, 11L-16, 12 PR F3 front tires, 1.12-cu. yd. (0.86 m^3) loader bucket, and 24-in. x 7.5-cu. ft. (610 mm x 0.21 m^3) backhoe bucket; a 410G unit with 19.5L-24, 10 PR R4 rear tires, 11L16, 12 PR F3 front tires, 1.30-cu. yd. (1.00 m^3) loader bucket, and 24-in. x 7.5-cu. ft. (610 mm x 0.21 m^3) backhoe bucket; and a 710G unit with 21L-28, 14 PR rear tires, 14.5/75-16.1, 10 PR F3 front tires, 1.62-cu. yd. (1.24 m^3) loader bucket, 24-in. x 11.1-cu. ft. (610 mm x 0.31 m^3) backhoe bucket.

SAFETY live with it

DKA310G Litho in U.S.A. (03-01)

Kubota

Compact Tractors
Grand L4330

SPECIFICATIONS

MODEL		L4330			
		DT (4WD)	GST (4WD)	HST (4WD)	HSTC (4WD,CAB)
Engine	Type	E-TVCS, indirect injection, vertical, liquid-cooled 4-cycle diesel			
	Engine gross power HP (kW)	43.2 (32.3)			
	Engine net power HP (kW)	41.0 (30.6)			
	PTO power HP (kW)	36.0 (27.0)		34.5 (25.8)	
	No. of cylinders	4			
	Bore & stroke in. (mm)	3.4 × 3.6 (87 × 92.4)			
	Total displace cu.in. (cc)	134.1 (2197)			
	Rated speed rpm	2600			
	Battery	80D 26R, 12V			
	Alternator	12V, 40A			12V, 60A
	Fuel tank capacity US gal. (L)	10.6 (40)			
PTO	Rear PTO				
	Revolution	1 speed: 540 rpm			
	Type	Independent		Independent*2)	
	Mid PTO	Option			
	Revolution	1 speed: 2000 rpm			
Hydraulic	Lift control type: Position	Standard			
	Draft	Option			
	Implement pump GPM (L/min.)	9.4 (35.6)			
	Power steering pump GPM (L/min.)	4.7 (17.9)			
	Total hydraulic flow GPM (L/min.)	14.1 (53.5)			
	3-point hitch	Category I			
	Lift capacity at 24 in. behind lift point lbs. (kg)	2760 (1250)			
Traveling System	Transmission	FST 8F/ 8R	GST 12F / 8R	HST (3 Ranges)	
	Steering	Hydrostatic power steering			
	Brake	Wet disc type			
	Clutch	Dry type single stage			
Std. tire size *1)	Front	8.3 - 16			
	Rear	14.9 - 24			

The company reserves the right to change the above specifications without notice. This brochure is for descriptive purposes only.
Please contact your local Kubota dealer for warranty information.
For your safety, KUBOTA strongly recommends the use of a Rollover Protective Structure (ROPS) and seat belt in almost all applications.
*1) Kubota offers several tire options.
*2) With Master Clutch.
*3) Speeds 3,5,7 and 9 of the GST are not included in the FST's 8 forward speeds.

Smile on my mac

Kubota

Compact Tractors

Grand L4330

SPECIFICATIONS

MODEL	L4330				
		DT (4WD)	GST (4WD)	HST (4WD)	HSTC (4WD,CAB)
Travel speeds	No. of speeds (at rated engine speed) mph (km/h)	GST*3) 12 Forward / 8 Reverse	Optional creep speeds for GST*3) 12 Forward /8 Reverse		HST 3 Ranges
		Forward / Reverse	Forward / Reverse		Forward
	First	1.0 (1.6) / 0.9 (1.5)	0.11 (0.18) / 0.10 (0.17)		Low:
	Second	1.4 (2.3) / 1.3 (2.1)	0.15 (0.25) / 0.15 (0.24)		L: 0 (0) to 3.9 (6.3)
	Third	1.9 (3.1) / 2.1 (3.5)	0.21 (0.34) / 0.24 (0.39)		Medium:
	Fourth	2.2 (3.6) / 3.1 (5.1)	0.25 (0.40) / 0.35 (0.57)		M: 0 (0) to 7.4 (11.9)
	Fifth	2.7 (4.4) / 4.5 (7.3)	0.31 (0.49) / 0.51 (0.82)		High:
	Sixth	3.3 (5.3) / 6.4 (10.4)	0.37 (0.60) / 0.72 (1.16)		H: 0 (0) to16.4 (26.4)
	Seventh	4.0 (6.5) / 10.4 (16.8)	0.44 (0.71) / 1.17 (1.89)		Reverse
	Eighth	4.8 (7.7) / 15.4 (24.8)	0.54 (0.86) / 1.73 (2.79)		Low:
	Ninth	5.6 (9.0)	0.63 (1.01)		L: 0 (0) to 3.4 (5.5)
	Tenth	6.7 (10.9)	0.76 (1.22)		Medium:
	Eleventh	11.0 (17.6)	1.23 (1.98)		M: 0 (0) to 6.6 (10.7)
	Twelfth	16.2 (26.1)	1.82 (2.92)		High:
					H: 0 (0) to 14.8 (23.8)
Dimensions	Overall length (w/o 3P) in. (mm)	121.3 (3080)			
	Overall width (min. tread) in. (mm)	66.5 (1690)			
	Overall height (w/ROPS) in. (mm)	91.1/84.8 (2315/2155)			87.0 (2210)
	Wheelbase in. (mm)	74.6 (1895)			
	Min. ground clearance in. (mm)	14.8 (375)			
	Front Tread (Front tire) in. (mm)	51.2 (1300)			
	Rear Tread (Rear tire) in. (mm)	50.6 (1285) 56.5 (1435) 60.2 (1530)			
Min. turning radius (w/brake, 4WD disengaged)	feet (m)	9.5 (2.9)			
Weight (with ROPS)	lbs. (kg)	3440 (1560)	3470 (1575)	3515 (1595)	3860 (1750)

The company reserves the right to change the above specifications without notice. This brochure is for descriptive purposes only.

Please contact your local Kubota dealer for warranty information.

For your safety, KUBOTA strongly recommends the use of a Rollover Protective Structure (ROPS) and seat belt in almost all applications.

*1) Kubota offers several tire options.

*2) With Master Clutch.

*3) Speeds 3,5,7 and 9 of the GST are not included in the FST's 8 forward speeds.

Smile on my mac

OPERATION AND PARTS MANUAL

MULTIQUIP

Diamond Back

STREET PRO 1 SERIES

MODEL SP113H18

(HONDA GX390 GASOLINE ENGINE)

MODEL SP15E16

(5 HP ELECTRIC MOTOR)

CONCRETE/ASPHALT SAW

Revision #6 (06/09/08)

To find the latest revision of this publication, visit our website at: www.multiquip.com

THIS MANUAL MUST ACCOMPANY THE EQUIPMENT AT ALL TIMES.

P/N 35100

WARNING

CALIFORNIA — Proposition 65 Warning

Engine exhaust and some of its constituents, and some dust created by power sanding, sawing, grinding, drilling and other construction activities contains chemicals known to the State of California to cause cancer, birth defects and other reproductive harm. Some examples of these chemicals are:

- Lead from lead-based paints.
- Crystalline silica from bricks.
- Cement and other masonry products.
- Arsenic and chromium from chemically treated lumber.

Your risk from these exposures varies, depending on how often you do this type of work. To reduce your exposure to these chemicals: ALWAYS work in a well ventilated area, and work with approved safety equipment, such as dust masks that are specially designed to filter out microscopic particles.

⚠ WARNING

SILICOSIS WARNING

Grinding/cutting/drilling of masonry, concrete, metal and other materials with silica in their composition may give off dust or mists containing crystalline silica. Silica is a basic component of sand, quartz, brick clay, granite and numerous other minerals and rocks. Repeated and/or substantial inhalation of airborne crystalline silica can cause serious or fatal respiratory diseases, including silicosis. In addition, California and some other authorities have listed respirable crystalline silica as a substance known to cause cancer. When cutting such materials, always follow the respiratory precautions mentioned above.

⚠ WARNING

RESPIRATORY HAZARDS

Grinding/cutting/drilling of masonry, concrete, metal and other materials can generate dust, mists and fumes containing chemicals known to cause serious or fatal injury or illness, such as respiratory disease, cancer, birth defects or other reproductive harm. If you are unfamiliar with the risks associated with the particular process and/or material being cut or the composition of the tool being used, review the material safety data sheet and/or consult your employer, the material manufacturer/supplier, governmental agencies such as OSHA and NIOSH and other sources on hazardous materials. California and some other authorities, for instance, have published lists of substances known to cause cancer, reproductive toxicity, or other harmful effects.

Control dust, mist and fumes at the source where possible. In this regard use good work practices and follow the recommendations of the manufacturers or suppliers, OSHA/NIOSH, and occupational and trade associations. Water should be used for dust suppression when wet cutting is feasible. When the hazards from inhalation of dust, mists and fumes cannot be eliminated, the operator and any bystanders should always wear a respirator approved by NIOSH/MSHA for the materials being used.

Proposition 65 Warning 2
Silicosis/Respiratory Warnings 3
Table Of Contents 4
Parts Ordering Procedures 5
Safety Message Alert Symbols 6-7
Rules For Safe Operation 8-10
Specifications (Saw) 11
Specifications (Engine) 12
General Information 13

MQ — STREET PRO 1 SAW

Controls & Components 14
Basic Engine 15
Preparation/Pre-Inspection 16-18
Blades 19
Blade Placement 20
Initial Start-Up 21-22
Operation 22
Maintenance 23-24
Troubleshooting (Saw) 25
Troubleshooting (Engine) 26-27
Explanation of Codes in Remarks Column 28
Suggested Spare Parts 29
Nameplate and Decals 30-31
Engine, Belts And Pulleys Assembly 32-33
Electric Motor Assembly 34-35
Undercarriage Assembly 36-37
Blade Assembly & Water System Assembly 38-39
Pointer Assembly 40-41

HONDA GX390K1QWT2/ GX390U1QWT2 ENG.

Air Cleaner Assembly 42-43
Camshaft Assembly 44-45
Carburetor Assembly 46-47
Control Assembly 48-49
Crankcase Cover Assembly 50-51
Crankshaft Assembly 52-53
Cylinder Barrel Assembly 54-55
Cylinder Head Assembly 56-57
Fan Cover Assembly 58-59
Flywheel Assembly 60-61
Fuel Tank Assembly 62-63
Ignition Coil Assembly 64-65
Muffler Assembly 66-67
Piston Assembly 68-69
Recoil Starter Assembly 70-71
Labels 72-73

Terms and Conditions of Sale — Parts 74

NOTE

Specifications and part numbers are subject to change without notice.

www.multiquip.com

Ordering parts has never been easier!
Choose from three easy options:

Effective:
January 1st, 2006

Best Deal!

Order via Internet (Dealers Only):
Order parts on-line using Multiquip's SmartEquip website!

- View Parts Diagrams
- Order Parts
- Print Specification Information

If you have an MQ Account, to obtain a Username and Password, E-mail us at: **parts@multiquip.com.**

To obtain an MQ Account, contact your District Sales Manager for more information.

Goto www.multiquip.com and click on **Order Parts** to log in and save!

Use the ***internet*** and qualify for a **5% Discount** on *Standard orders* for all orders which include complete part numbers.*

Note: Discounts Are Subject To Change

Order via Fax (Dealers Only):
All customers are welcome to order parts via Fax.
Domestic (US) Customers dial:
1-800-6-PARTS-7 (800-672-7877)

Fax your order in and qualify for a **2% Discount** on *Standard orders* for all orders which include complete part numbers.*

Note: Discounts Are Subject To Change

Order via Phone: **Domestic (US) Dealers Call:**
1-800-427-1244

Non-Dealer Customers:
Contact your local Multiquip Dealer for parts or call 800-427-1244 for help in locating a dealer near you.

International Customers should contact their local Multiquip Representatives for Parts Ordering information.

When ordering parts, please supply:

- ❒ **Dealer Account Number**
- ❒ **Dealer Name and Address**
- ❒ **Shipping Address (if different than billing address)**
- ❒ **Return Fax Number**
- ❒ **Applicable Model Number**
- ❒ **Quantity, Part Number and Description of Each Part**
- ❒ **Specify Preferred Method of Shipment:**
  - ✓ UPS/Fed Ex
    - Priority One
    - Ground
    - Next Day
    - Second/Third Day
  - ✓ DHL
  - ✓ Truck

NOTE

All orders are treated as *Standard Orders* and will ship the same day if received prior to 3PM PST.

WE ACCEPT ALL MAJOR CREDIT CARDS!

MQ STREET PRO 1 SAW — SAFETY MESSAGE ALERT SYMBOLS

FOR YOUR SAFETY AND THE SAFETY OF OTHERS!

Safety precautions should be followed at all times when operating this equipment. Failure to read and understand the Safety Messages and Operating Instructions could result in injury to yourself and others.

NOTE

This Owner's Manual has been developed to provide complete instructions for the safe and efficient operation of the MULTIQUIP SP 1. For engine maintenance information, please refer to the engine manufacturers instructions for data relative to its safe operation.
Before using this CONCRETE/ASPHALT SAW, ensure that the operating individual has read and understands all instructions in this manual.

SAFETY MESSAGE ALERT SYMBOLS

The three (3) Safety Messages shown below will inform you about potential hazards that could injure you or others. The Safety Messages specifically address the level of exposure to the operator, and are preceded by one of three words: **DANGER**, **WARNING**, or **CAUTION**.

DANGER: You **WILL** be **KILLED** or SERIOUSLY injured if you **DO NOT** follow directions.

WARNING: You **CAN** be **KILLED** or SERIOUSLY injured if you **DO NOT** follow directions.

CAUTION: You **CAN** be injured if you **DO NOT** follow directions.

Potential hazards associated with SP 1 operation will be referenced with "***Hazard Symbols***" which appear throughout this manual, and will be referenced in conjunction with Safety "***Message Alert Symbols***".

HAZARD SYMBOLS

Lethal Exhaust Gases

Engine exhaust gases contain poisonous carbon monoxide. This gas is colorless and odorless, and can cause death if inhaled. **NEVER** operate this equipment in a confined area or enclosed structure that does not provide ample free flow air.

Guards and Covers In Place

NEVER operate the saw without blade guards and covers in place. Adhere to safety guidelines ANSI (American National Standards Institute), OSHA or other applicable local regulations.

Burn Hazards

Engine components can generate extreme heat. To prevent burns, **DO NOT** touch these areas while the engine is running or immediately after operations. **NEVER** operate the engine with heat shields or heat guards removed.

Rotating Parts

NEVER operate equipment with covers, or guards removed. Keep fingers, ***hands***, ***hair*** and ***clothing*** away from all moving parts to prevent injury.

MQ STREET PRO 1 SAW — SAFETY MESSAGE ALERT SYMBOLS

Accidental Starting

ALWAYS place the engine ON/OFF switch in the **OFF** position, when the saw is not in use.

Respiratory Hazard

ALWAYS wear approved respiratory protection.

Over Speed Conditions

NEVER tamper with the factory settings of the engine governor or settings. Personal injury and damage to the engine or equipment can result if operating in speed ranges above maximum allowable.

Sight and Hearing hazard

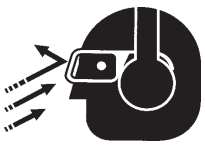

ALWAYS wear approved eye and hearing protection.

Rotating Blade

Rotating blade can cut and crush. Keep hands and feet clear.

Equipment Damage Messages

Other important messages are provided throughout this manual to help prevent damage to your concrete saw, other property, or the surrounding environment.

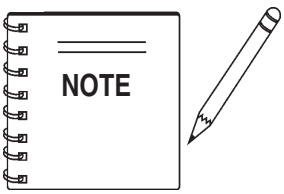

This ***concrete/asphalt saw***, other property, or the surrounding environment could be damaged if you do not follow instructions.

RULES FOR SAFE OPERATION

CAUTION:

Failure to follow instructions in this manual may lead to serious injury or even death! This equipment is to be operated by trained and qualified personnel only! This equipment is for industrial use only.

The following safety guidelines should always be used when operating the SP 1.

SAFETY

- **DO NOT** operate or service this equipment before reading this entire manual.
- This equipment should not be operated by persons under 18 years of age.
- **NEVER** operate the saw without proper protective clothing, shatterproof glasses, steel-toed boots and other protective devices required by the job.

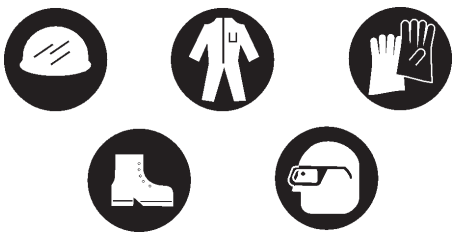

- **NEVER** operate this equipment when not feeling well due to fatigue, illness or taking medicine.

- **NEVER** operate the saw under the influence or drugs or alcohol.
- **NEVER** use accessories or attachments, which are not recommended by Multiquip for this equipment. Damage to the equipment and/or injury to user may result.
- Manufacturer does not assume responsibility for any accident due to equipment modifications. Unauthorized equipment modification will void all warranties.
- Whenever necessary, replace nameplate, operation and safety decals when they become difficult read.
- **ALWAYS** check the saw for loosened hardware such as nuts and bolts before starting.

Gasoline Powered Saws

- **NEVER** touch the hot exhaust manifold, muffler or cylinder. Allow these parts to cool before servicing the saw.
- **High Temperatures** – Allow the engine to cool before adding fuel or performing service and maintenance functions. Contact with ***hot!*** components can cause serious burns.
- The engine of this saw requires an adequate free flow of cooling air. **NEVER** operate the saw in any enclosed or narrow area where free flow of the air is restricted. If the air flow is restricted it will cause serious damage to the saw's engine and may cause injury to people. Remember the saw's engine gives off ***DEADLY*** carbon monoxide gas.

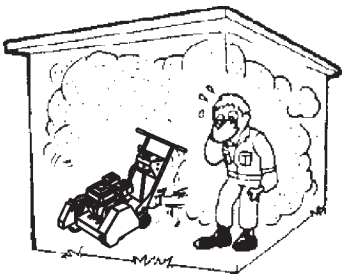

- **ALWAYS** refuel in a well-ventilated area, away from sparks and open flames.

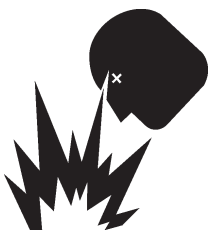

- **ALWAYS** use extreme caution when working with **flammable** liquids. When refueling, **STOP** the engine and allow it to cool.

- **NEVER** ***smoke*** around or near the machine. Fire or explosion could result from ***fuel vapors***, or if fuel is spilled on a ***hot!*** engine.
- **NEVER** operate the saw in an explosive atmosphere where fumes are present or near combustible materials. An explosion or fire could result causing severe ***bodily harm or even death***.
- Topping-off to filler port is dangerous, as it tends to spill fuel.
- **NEVER** use fuel as a cleaning agent.

Electric Saws

- **ALWAYS** connect the motor to a power source in compliance with all local electrical codes. This must be performed by a qualified electrician. After this connection is made, it will be necessary to check the rotation of the motor shaft. The shaft rotation should be ***counter-clockwise*** when viewing the motor from the shaft extension end. If the rotation of the shaft is incorrect make necessary changes for the correct shaft rotation.
- **MAKE CERTAIN** the power cord/extension cord is free from damage and that the grounding circuit is operational.
- **MAKE CERTAIN** the extension cord that you are using is intended to be used in the environment you are using it in. If an extension is used, **NEVER** submerge the connection in water. To reduce the risk of electric shock, always make water-tight connections.
- **MAKE CERTAIN** the **"ON/OFF"** switch is in the **"OFF"** position before plugging in the power cord/extension cord to avoid accidental starting.
- Use only the guage wire and length of cord recommended for the motor size. Refer to the electric cord chart in this manual.
- When cutting, **ALWAYS** be aware of the location of the cord.

General Safety

- **ALWAYS** read, understand, and follow procedures in Operator's Manual before attempting to operate equipment.
- **ALWAYS** be sure the operator is familiar with proper safety precautions and operating techniques before using the saw.
- **NEVER** leave the machine ***unattended*** while running.
- Block the unit when leaving or when using on a slope.
- **ALWAYS** check to make sure that the operating area is clear before starting the engine.
- Maintain this equipment in a safe operating condition at all times.
- **ALWAYS** stop the engine before servicing, adding fuel and oil.
- **NEVER** run the engine without the air filter. Severe engine damage could occur.
- **ALWAYS** service air cleaner frequently to prevent carburetor malfunction.
- **AVOID** wearing jewelry or loose fitting clothing that may snag on the controls or moving parts, this can cause a serious injury.
- **ALWAYS** keep clear of ***rotating*** or ***moving parts*** while the saw is in operation.
- **ALWAYS** store equipment properly when it is not being used. Equipment should be stored in a clean, dry location out of the reach of children.
- **NEVER** use accessories or attachments which are not recommended by the manufacturer for this equipment. Damage to the equipment and/or injury to user may result.

WARNING

- **ALWAYS** check to make sure that the operating area is clear before starting the engine.
- Keep all inexperienced and unauthorized people away from the equipment at all times.

Diamond Blade Safety

- Use appropriate steel centered diamond blades manufactured for use on concrete saws.

WARNING

- **ALWAYS** inspect diamond blades before each use. The blade should exhibit no cracks, dings, or flaws in the steel centered core and/or rim. Center (arbor) hole must be undamaged and true.
- Examine blade flanges for damage, excessive wear and cleanliness before mounting blade. Blade should fit snugly on the shaft and against the inside/outside blade flanges.
- Ensure the blade is marked with an operating speed greater than the blade shaft speed of the saw.
- Only cut the material that is specified by the diamond blade. Read the specifications of the diamond blade to ensure the proper tool has been matched to the material being cut.
- **ALWAYS** keep blade guards in place. Exposure of the diamond blade must not exceed 180 degrees.
- Ensure that the diamond blade does not come into contact with the ground or surface during transportation. **DO NOT** drop the diamond blade on ground or surface.
- The engine governor is designed to permit maximum engine speed in a no-load condition. Speeds that exceed this limit may cause the diamond blade to exceed the maximum safe allowable speed.
- Ensure that the blade is mounted for proper operating direction.

Saw Transportation Safety

- Use appropriate lifting equipment to ensure the safe movement of the saw.
- **DO NOT** use the handle bars and/or front pointer as lifting points.
- **NEVER** attempt to tow the untrailered saw behind a vehicle.
- Do not use on slopes or on extremely unlevel surfaces. An engine tipped to extreme angles may cause oil to gravitate into the cylinder head making the engine start difficult.
- **NEVER** transport the saw with the blade mounted.

EMERGENCIES

- **ALWAYS** know the location of the nearest ***fire extinguisher.***

- **ALWAYS** know the location of the nearest ***first aid kit.***

- In emergencies ***always*** know the location of the nearest phone or ***keep a phone on the job site***. Also know the phone numbers of the nearest ***ambulance***, ***doctor,*** and ***fire department***. This information will be invaluable in the case of an emergency.

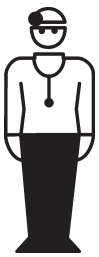

Machine Operation And Safety Decals

The SP 1 is equipped with a number of operation and safety decals. Should any of these decals become unreadable, replacements can be obtained from your dealer.

P/N 25215-001
(ELECTRIC MODEL ONLY)

P/N 11247 (ISO Black)
P/N 36099 (ISO Blue)

P/N 22122-001

P/N 25782

P/N 25250-001

P/N 25783

P/N 25249-001

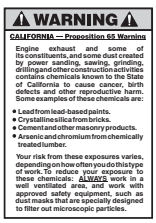

P/N 20525

P/N 25491

P/N 25678

P/N 13118

CONTACT
SERVICE
DEPARTMENT

P/N 23330-001

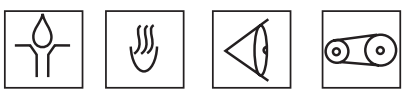

P/N 11246
(Sheet-Intl. Stds)

Figure 1. SP 1 Decals

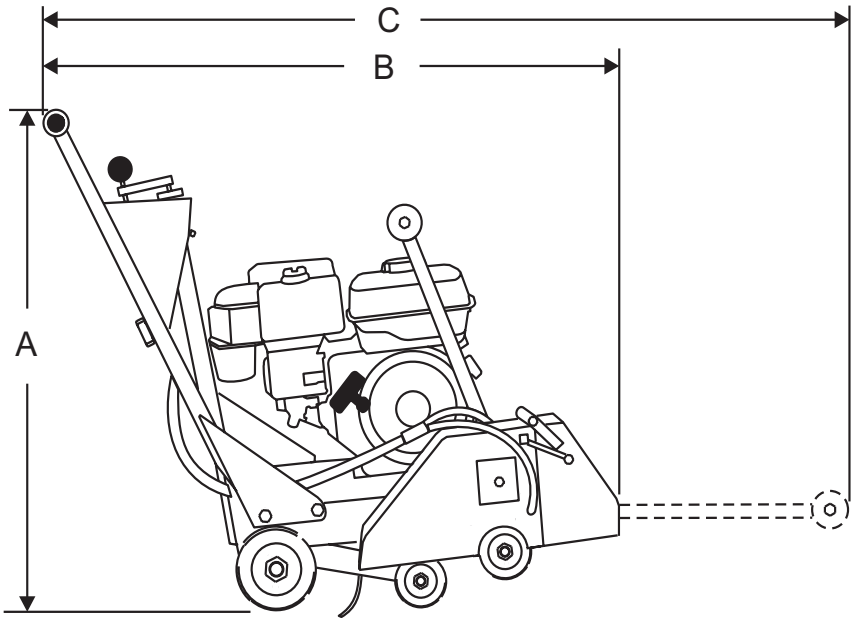

Side View

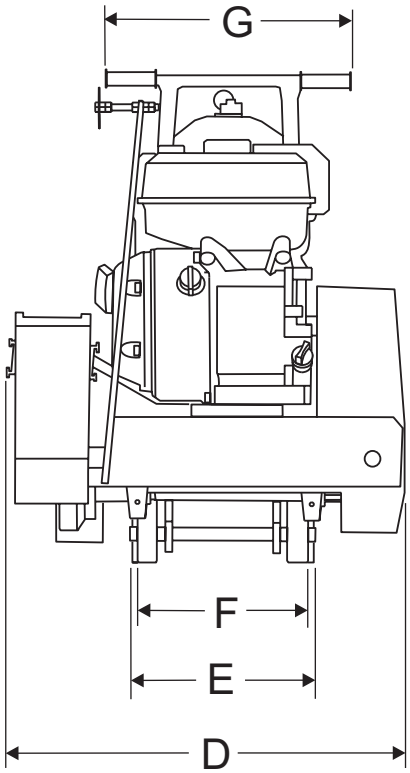

Front View

Figure 2. SP 1 Dimensions

Table 1. SP 1 Specifications		
REFERENCE LETTER	DESCRIPTION	DIMENSION (cm)
A	Max Height	37.0 In. (94 cm)
B	Max Length (Front Pointer Raised)	32.0 In. (80 cm)
C	Max Length (Front Pointer Lowered)	54.5 In. (138 cm)
D	Max Width	21.5 In. (55 cm)
E	Rear Wheel Base	17.0 In. (40 cm)
F	Front Wheel Base	10.0 In. (25.4 cm)
G	Handle Bar Width	21.5 In. (55 cm)
		WEIGHT (KG)
	SP 1, 13 HP HONDA ENGINE	214 Lb. (97.0 K.g)

Table 2. Specifications (Engine)

Engine	**Model**	**HONDA GX390K1QWT2/GX390U1QWT2**
	Type	Air-cooled 4 stroke, Single Cylinder, OHV, Gasoline Engine
	Bore X Stroke	3.5 in. X 2.5 in. (88 mm x 64 mm)
	Displacement	23.7 cu-in. (389 cc)
	Max Output	13.0 H.P./3600 R.P.M.
	Fuel Tank Capacity	Approx. 1.72 U.S. Gallons (6.5 Liters)
	Fuel	Unleaded Automobile Gasoline 86 Octane or higher
	Lube Oil Capacity	1.16 US qt (1.1 liter)
	Speed Control Method	Centrifugal Fly-weight Type
	Starting Method	Recoil Start
Dimension (L x W x H)		15.0 x 17.7 X 17.4 in. (380 X 450 X 443 mm)
Dry Net Weight		68.4 lbs (31 Kg.)

General Information

The MQ Whiteman SP1 series ***walk-behind saws*** are designed for ***wet*** or ***dry*** cutting of ***concrete*** or ***asphalt*** utilizing Diamond Blades. These saws have been engineered for general and industrial flat sawing applications. The reinforced steel box frame design adds strength necessary to reduce vibrations while cutting. Minimizing vibrations enhances the performance of the blade and extends the life of the saw.

Heavy-duty front and rear axles, sturdy oversized wheels, and industrial under carriage assembly ensure accurate tracking and years of reliable use.

Additionally, the general weight-to-strength ratio design of the frame and chassis assembly provides for optimum weight distribution to keep the blade running true in the cut. A rugged blade shaft bearing assembly ensures minimal flutter and shaft harmonics providing the most advantageous condition for a diamond blade at operating speeds.

The SP1 series saws are available in gasoline or electric power versions. The gasoline version comes equipped with an 18-inch blade guard and handles Diamond Blades ranging in size from 12-18-inches in diameter. The electric version comes standard with a 16-inch blade guard, it can handle Diamond Blades™ ranging in size from 12-16-inch in diameter.

An ACME thread, manual **raise/lower** assembly, easily raises and lowers the blade, and locks it into position to ensure a constant depth cut. All SP1 series saws are equipped with a retractable cutting guide, oversized roller bearing wheels, industrial blade shaft berings, and a rigid steel frame.

Power Plants

The SP1 series saws are generally classified in the industry as a "***LOW*** to ***MEDIUM*** " horsepower saws. This classification is particularly useful when selecting the proper diamond blade for an application.

The ***gasoline*** version of the SP1 saw is powered by a HONDA GX-390 air cooled, 4-stroke, single cylnder, OHV gasoline engine rated at 13 HP at 3,600 RPM. Blade rotation is V-belt driven. This is accomplished by connecting the output shaft of the engine to a upper drive pulley. The lower drive pulley (blade) is then connected to the upper drive pulley (engine) by three V-belts. As the engine shaft rotates, so does the blade.

Refer to the engine ***Owner's Manual*** for specific instructions regarding engine operation and maintenance practices.

The ***electric*** version of the SP1 saw is powered by a 5.0 HP, 230 VAC single-phase electric motor. Blade rotation is also belt driven.

All MQ Whiteman SP1 series saws are designed, engineered and manufactured with strict adherence to American National Standards Institute, Inc. (ANSI) guidelines B7.1 and B7.5.

Water System

All SP1 series saws provide a hardy water plumbing system that evenly distributes optimum water volume and flow rate to both sides of the blade to keep the blade cool when cutting. The basic water system consist of : a standard "garden hose" valve that connects the water source (via a hose) to the saw.

Features

- Super-rigid box frame- ensures straight cuts while resisting warping and vibration.
- Rugged roller bearing wheels for long service life.
- Comfortable grip handles
- Easy cranking for manually raising/lowering the blade to the desired cutting height.
- Hinged front, lift-up blade guard is designed to provide easy blade replacement.
- Saw position guide helps ensure straight cuts.
- Water system provides optimum flow and volume of water to both sides of the blade.

CONTROLS & COMPONENTS

Figures 3 shows the location of the basic controls or components for the SP 1. Listed below is a brief explanation of each control or component. (Gasoline-powered unit shown)

1. **Hand Grips/Handlebar –** When operating the saw, place both hands on each grip to maneuver the saw. Replace hand grips when they become worn or damaged.
2. **Handle Lock –** Lock blade depth to desired position.
3. **Garden Hose Connecter –** Connect to water source to provide blade cooling while cutting concrete or asphalt.
4. **Air Filter –** Prevents dirt and debris from entering the engine air intake. Check filter periodically and keep cleaned or replace when necessary.
5. **Recoil Starter Handle –** Pull to engage and start the engine.
6. **Recoil Starter Assembly –** Engages the engine when the handle is pulled and rewinds the starter rope when the handle is released.
7. **Wheels/Carriage Assembly –** Heavy-duty polyurethane wheels with permanently sealed ball bearings.
8. **Cutting Blade –** Use appropriate type blades for cutting concrete or asphalt.
9. **Blade Guard –** Covers saw blade and flips up to allow blade to be changed.
10. **Belt Tension Adjuster –** Adjusts belt tension.
11. **Front Pointer –** Front pointer wheel assists in straight tracking.
12. **Front Pointer Arm –** Stows up for storage and pivots down for use.
13. **Cutting Depth Adjuster –** turn operating crank clockwise or counter-clockwise to adjust the cutting depth up or down.
14. **Fuel Tank –** Use unleaded gasoline. Do not overfill.
15. **Blade Coolant System –** Provides cooling water to blade during cutting operations.
16. **V-Belt Cover –** Remove this cover to gain access to the V-belt. **NEVER** operate the saw with this cover removed.
17. **Arbor Shaft Grease Zerks –** Conveniently located for lubrication.
18. **On/Off Switch** – Turn to the "**ON**" position to allow engine to be started and turn to the "**OFF**" position to shut the engine off.

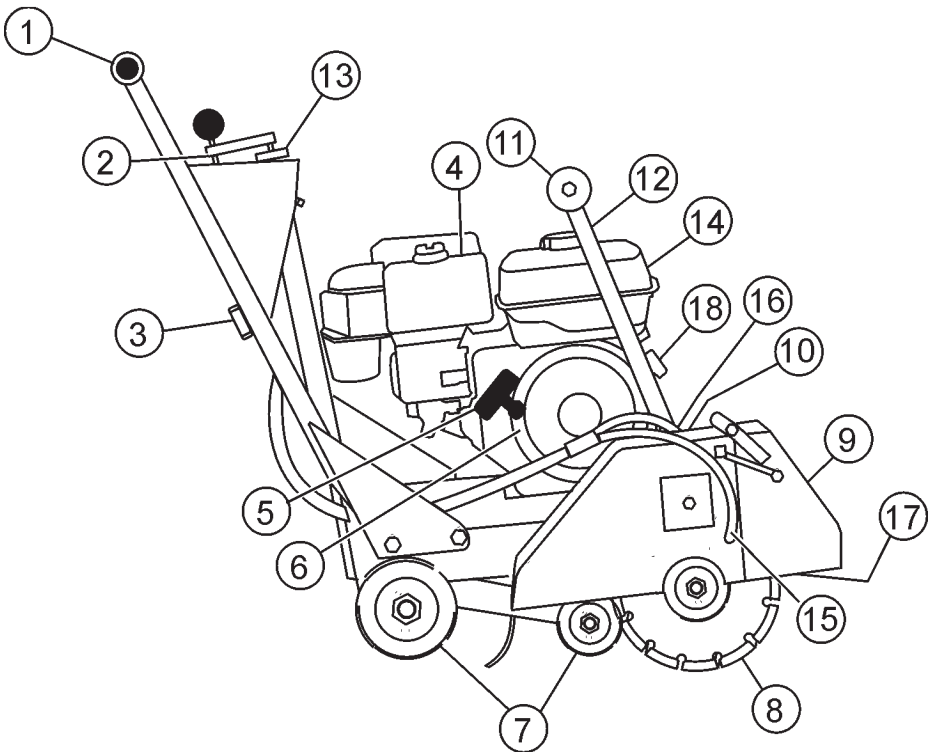

Figure 3. SP 1

BASIC ENGINE

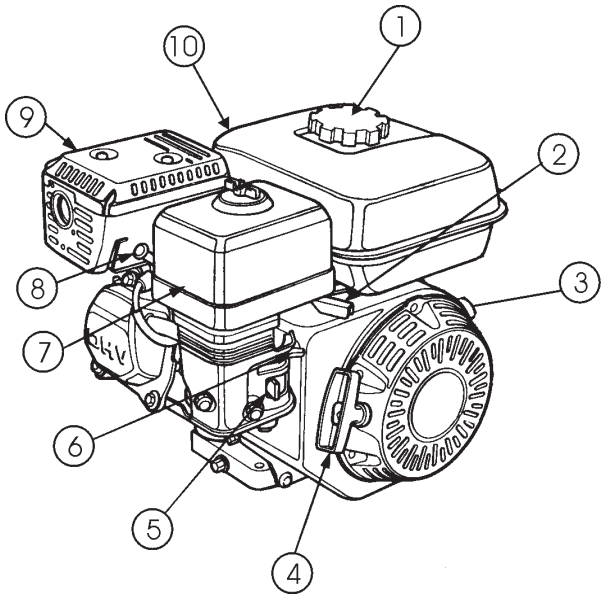

Figure 4. Engine Controls and Components

Initial Servicing

The engine (Figure 4) must be checked for proper lubrication and filled with fuel prior to operation. Refer to the manufacturers engine manual for instructions & details of operation and servicing.

1. **Fuel Filler Cap –** Remove this cap to add unleaded gasoline to the fuel tank. Make sure cap is tightened securely. **DO NOT** over fill.

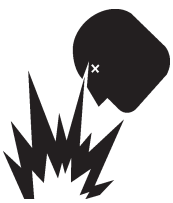

DANGER

Adding fuel to the tank should be done only when the engine is stopped and has had an opportunity to cool down. In the event of a fuel spill, **DO NOT** attempt to start the engine until the fuel residue has been completely wiped up, and the area surrounding the engine is dry.

2. **Throttle Lever –** Used to adjust engine RPM speed (lever advanced forward ***SLOW***, lever back toward operator ***FAST***).
3. **Engine ON/OFF Switch – ON** position permits engine starting, **OFF** position stops engine operations.
4. **Recoil Starter (pull rope) –** Manual-starting method. Pull the starter grip until resistance is felt, then pull briskly and smoothly.
5. **Fuel Valve Lever – OPEN** to let fuel flow, **CLOSE** to stop the flow of fuel.
6. **Choke Lever –** Used in the starting of a cold engine, or in cold weather conditions. The choke enriches the fuel mixture.
7. **Air Cleaner –** Prevents dirt and other debris from entering the fuel system. Remove wing-nut on top of air filter cannister to gain access to filter element.

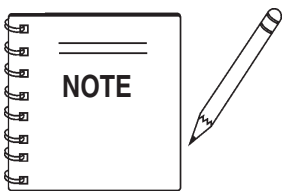

Operating the engine without an air filter, with a damaged air filter, or a filter in need of replacement will allow dirt to enter the engine, causing rapid engine wear.

8. **Spark Plug –** Provides spark to the ignition system. Set spark plug gap to 0.6 - 0.7 mm (0.028 - 0.031 inch) Clean spark plug once a month.
9. **Muffler –** Used to reduce noise and emissions.

WARNING

Engine components can generate extreme heat. To prevent burns, **DO NOT** touch these areas while the engine is running or immediately after operating. **NEVER** operate the engine with the muffler removed.

10. **Fuel Tank –** Holds unleaded gasoline. For additional information refer to engine owner's manual.

PREPARATION / PRE-INSPECTION

1. Read and fully understand this manual, the safety intructions in particular, and the engine manufacturer's manual supplied with the saw.

2. Select the correct blade for each application. If abrasive blades are used, **MAKE CERTAIN** they are designed for use on a concrete floor saw. They must be reinforced and have a hole for the driving pin. When wet cutting with an abrasive blade, **MAKE CERTAIN** the blade is intended for wet cutting. Water will destroy a dry cut abrasive blade. Some diamond blades require water cooling and failure to do so will destroy them almost immediately. Other diamond blades can be used with or without water. Refer to the Blades and Blade Placement sections on pages 18 and 19 for further information.

3. Handle all blades with care and **NEVER** use a damaged blade. **NEVER** use an abrasive blade that has been dropped.

Electric Powered Saws

1. The motor should be connected to a power source in compliance with all local electrical codes. This must be performed by a qualified electrician. After this connection is made, it will be necessary to check the rotation of the motor shaft. The shaft rotation **MUST** be **counter-clockwise** when viewing the motor from the shaft extension end. If the rotation of the shaft is incorrect make the necessary changes for the correct shaft rotation.
2. **MAKE CERTAIN** the rated line voltage is at the motor when cutting. Motors can burn out when the voltage falls 10% below the voltage rating of the motor. Also use the correct heavy duty circuit breakers or fuses in the circuit.
3. **MAKE CERTAIN** the correct size extension cord is used. Undersize wires will burn out motors. Use the following chart to determine the extension cord size.

TABLE 3. Extension Cord Sizes

MOTOR	VOLTAGE	50' LONG	75' LONG	100' LONG
5 HP single phase	230	NO. 10	NO. 8	NO. 6

WARNING

ALWAYS use a grounded (3-wire) extension cord and **MAKE CERTAIN** that the motor is connected to a properly grounded electric circuit to protect the operator from possible electric shock.

NEVER! touch the power cord (Figure 5) with ***wet hands*** or while ***standing in water*** when it is connected to a power source. The possibly exists of electrical shock (electrocution) even death. ***NEVER!*** spray water directly on the electric motor.

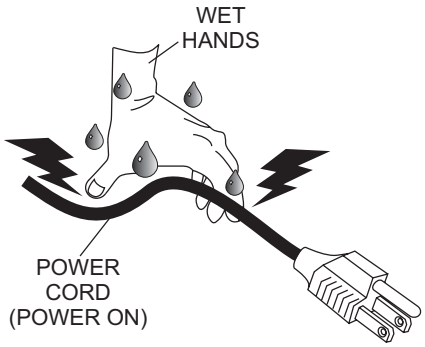

Figure 5. Extension Cord (Wet Hands)

Gasoline Powered Saws

1. Clean the ***saw,*** removing dirt and dust, particularly the engine cooling air inlet, carburetor and air cleaner.
2. Check the air filter for dirt and dust. If air filter is dirty, replace air filter with a new one as required.
3. Check carburetor for external dirt and dust. Clean with dry compressed air.
4. Check fastening nuts and bolts for tightness.

Engine Oil Check

1. To check the engine oil level, place the saw on secure level ground with the engine stopped. The frame platform ***must be level*** to accurately check the engine oil.
2. Remove the filler dipstick from the engine oil filler hole (Figure 6) and wipe it clean.

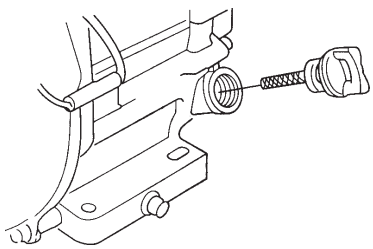

Figure 6. Engine Oil Dipstick (Removal)

3. Insert and remove the dipstick without screwing it into the filler neck. Check the oil level shown on the dipstick.
4. If the oil level is low (Figure 7), fill to the edge of the oil filler hole with the recommended oil type (Table 4).

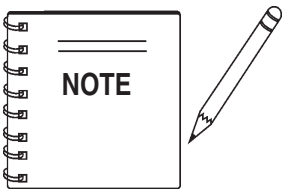

Reference manufacturer engine manual for specific servicing instructions.

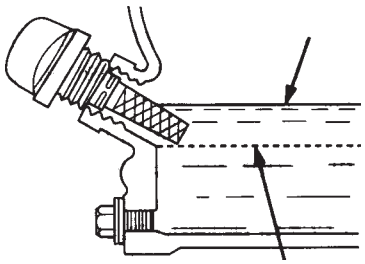

Figure 7. Engine Oil Dipstick (Oil Level)

Table 4. Oil Type		
Season	**Temperature**	**Oil Type**
Summer	25°C or Higher	SAE 10W-30
Spring/Fall	25°C~10°C	SAE 10W-30/20
Winter	0°C or Lower	SAE 10W-10

Explosive Fuel

Fuel Check

Motor fuels are highly flammable and can be dangerous if mishandled. **DO NOT** smoke while refueling. **DO NOT** attempt to refuel the trowel if the engine is ***hot!*** or ***running***.

1. Remove the gasoline cap located on top of fuel tank.
2. Visually inspect to see if fuel level is low. If fuel is low, replenish with unleaded fuel.
3. When refueling, be sure to use a strainer for filtration. **DO NOT** top-off fuel. Wipe up any spilled fuel.

Guards And Covers

WARNING

NEVER operate the saw without blade guards and covers in place. **DO NOT** operate with the front of the blade guard raised. The blade exposure cannot exceed 180 degrees during operation. Adhere to the safety guidelines of the **American National Standards Institute (ANSI) B7.1 and B7.5.**

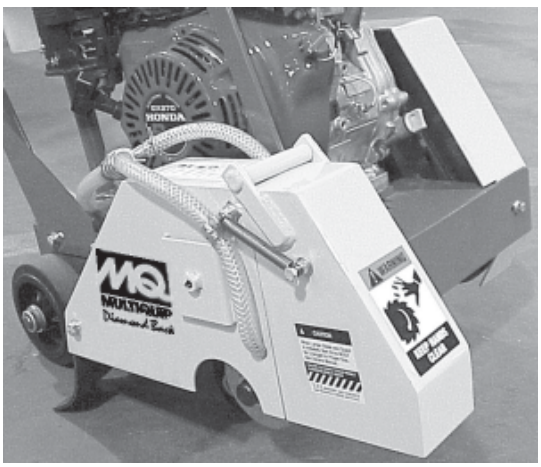

Figure 8. Blade Guard

CHECK the following on the **blade guard** (Figure 8):

- Ensure the capacity of the blade guard matches the diameter of your diamond blade.
- Check that the guard is bolted firmly upon the saw frame.
- Check that the spring tensioned front cover of the guard is firmly seated with the rear section of the guard and there are no gaps. **NEVER** lift the blade guard while cutting.

ENSURE the **V-belt Cover** is in place and securely fastened during operation of the saw (Figure 8).

V-Belt Check

A worn or damaged V-belt can adversely affect the performance of the saw. If a V-belt is defective or worn, replace **ALL** the V-belts. V-belts should always be replaced in sets.

CAUTION

NEVER attempt to check the V-belt with the engine running. Severe injury can occur. Keep fingers, hands, hair, and clothing away from all moving parts.

V-belt Alignment and Tensioning

This saw is equipped with a premium V-belt that has been aligned and tensioned by factory personnel. The V-belt must be aligned and tensioned for proper operation of the saw.

Use the following procedure to check the alignment of V-belt:

1. Remove the bolts that secure the V-belt cover (Figure 9) to the saw frame.

Figure 9. V-Belt Cover

2. Check uniform parallelism (Figure 10) of V-belt and pulley (sheaves). Use a straight-edge or machinist's square against both pulleys and adjust both pulleys until equally aligned.

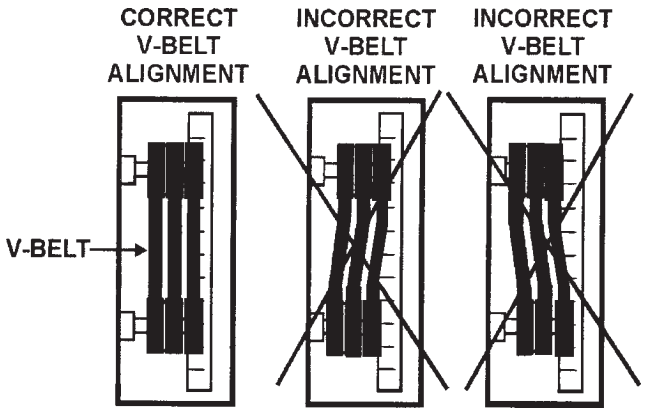

Figure 10. Pulley Alignment

3. Check V-belt tension by using a tension meter (3.0 lbs.) against the inside belt at a mid point between the two pulleys, or by deflecting the center belt at a mid point 3/16" (5 mm).

4. **DO NOT** over or under tighten the V-belt. Severe damage can occur to the saw and engine crankshaft if the belt is over-tensioned. A decrease of power to the blade and poor performance will result if the belt is under-tensioned (loose on pulleys).

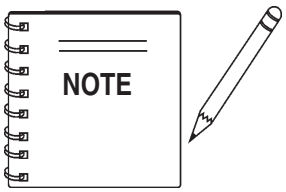

V-belt alignment must be rechecked after adjusting belt tension.

BLADES

Saw blades, or cutting disks, are available in either an abrasive design or as diamond blades. Either blade will work on the SP 1, however, diamond blades are recommended. Ask your dealer about your specific cutting application.

SAW BLADE INSPECTION

WARNING

Failure to thoroughly inspect the diamond blade (Figure 11) for operational safety could result in damage to the blades or the saw and may cause injury to the user or others in the operating area.

1. **Stress Relief Holes (Gullets)** - Check the steel core for cracks that may have propagated from the slots and/or gullets. Cracks indicate extreme fatigue failure and if sawing continues, catastrophic failure will occur.

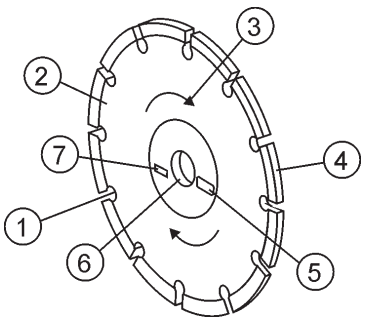

Figure 11. Diamond Blade

2. **Edge of the Steel Core** - Check the diameter edge for discoloration (blue oxidation) indicating an overheating condition caused by insufficient cooling water/air. Overheating of blades may lead to loss of core tension and/ or increase the possibility for blade failure. Make sure the steel core's width is uniform about the rim of the blade, and not succumbing to an "under-cutting" condition brought about by highly abrasive material or improper under-cutting core protection.

3. **Directional Arrow** - Ensure that the blade is oriented properly on the blade shaft for sawing. Reference the directional arrow on the blade and place it so the direction of rotation "downcuts" with the turn of the shaft.

4. **Diamond Segment or Rim** - Ensure there are no cracks, dings, or missing portions of the diamond segment/rim. **DO NOT *use a blade that is missing a segment or a portion of the rim.*** Damaged and /or missing segments/rims may cause damage to your saw or injury to the user or others in the operating area.

5. **Specifications** - Ensure that the blade specifications, size, and diameter properly match up to sawing operations. Utilizing a blade not matched properly to the task may result in poor performance and/or blade damage.

6. **Arbor Hole** - It is essential that the arbor hole diameter properly matches the blade, and that it is free from distortion. Correct blade flanges (collars) must be used. The inside face of the flanges must be clean and free of debris. An out-of-round arbor condition will cause damage to the blade and the saw.

7. **MAX RPM** - This RPM reference is the maximum safe operating speed for the blade selected. **NEVER** exceed the max RPM on the diamond blade. Exceeding the maximum RPM is dangerous and may cause poor performance and may damage the blade.

BLADE PLACEMENT

WARNING

Failure to thoroughly inspect the diamond blade for operational safety could result in damage to the blades or the saw and may cause injury to the user or others in the operating area.

1. **Blade Guard** - Pivot the blade guard front cover all the way back. The guard tension spring will keep the front cover in position.
2. **Blade Hex Nut** - Unscrew the blade shaft nut (right side loosens clockwise and tightens counter-clockwise while the left side loosens counter-clockwise and tightens clockwise. **DO NOT** overtighten the nut (approximately 45-50 ft. lb/61-68 N/m) when finalizing the assembly.
3. **Outside Blade Flange (Collar)** - Ensure that the outside blade flange is placed flush against the diamond blade. The inside surface of the flange must be free of debris and permit a tight closure on the surface of the blade core.
4. **Diamond Blade** - Ensure that the proper diamond blade has been selected for the job. Pay close attention to the directional arrows on the blade. The blade's operating directional arrows must point in a "down-cutting" direction to perform correctly. When placing the blade onto the blade shaft, ensure the arbor hole of the blade matches the diameter of the shaft.
5. **Inner Flange (Collar)** - This flange is fixed upon the blade shaft. The inside surface of the flange must be free of debris and permit a tight closure on the surface of the blade.

Blade Speed

A diamond blade's performance is directly connected to specific peripheral (rim) speeds.

The following shaft rotational speeds have been factory set to ensure optimum blade performance.

- SP1- 18-inch (457.2 mm) Capacity - 2,836 RPM.

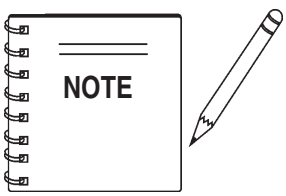

The following steps should be accomplished before using the saw on any cutting surface.

WARNING

Dropping or forcing the blade onto the cutting surface can severely damage the diamond blade and may cause serious damage to the saw and bodily harm.

Blade Removal and Replacement

1. Set the engine ON/OFF switch to the **"OFF"** position. (Unplug electric models.)
2. Place the saw on a stable level working surface.
3. Ensure the blade is raised and the raise/lower crank is locked into position.

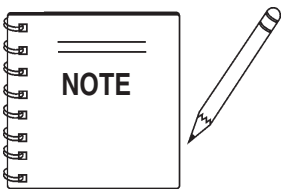

When removing or installing a diamond blade, please note that the blade retaining nuts are left and right-hand threaded.

5. Lift up the blade guard cover to gain access to the blade.
6. Use the provided blade nut and blade shaft locking wrenches to remove and install the blade.
   - While holding the blade shaft with the locking wrench, remove the blade hex nut (clockwise direction) and outer blade flange.
   - Remove the old blade and install a new blade in the same rotational direction as marked on the old blade.
   - Reinstall the outer blade flange and hex nut. Tighten the nut firmly (counter-clockwise direction). **DO NOT OVERTIGHTEN.**

Cutting Depth Adjustment

The saw is equipped with a Raise/Lower Assembly that is supported by the following components.

- Raise/Lower Acme Screw
- Jack Arm
- Blade Guard
- Adjusting Handle Crank

INITIAL START-UP

CAUTION

DO NOT attempt to operate the saw until the Safety, General Information and Inspection sections of this manual have been read and thoroughly understood. Depending on engine manufacturer, operating steps may vary. See engine manufactures operating manual.

CAUTION

NEVER operate the saw in a confined area or enclosed area structure that does not provide ample ***free flow of air***.

ALWAYS wear approved eye and hearing protection before operating the saw.

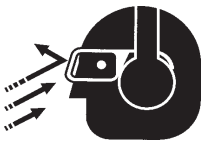

NEVER place hands or feet inside the belt guard or blade guard while the engine is running. **ALWAYS** shut the engine down before performing any kind of maintenance service on the saw.

1. Ensure the diamond blade has been mounted correctly and that it is raised above the surface you are about to saw.
2. Place the ***fuel valve lever*** (Figure 12) to the "**ON**" position.

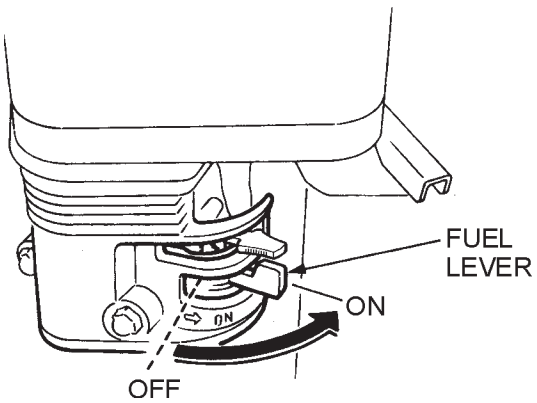

Figure 12. Engine Fuel Valve Lever

3. Place the ***Engine ON/OFF switch*** (Figure 13) in the "**ON**" position.

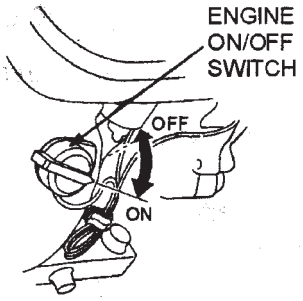

Figure 13. Engine ON/OFF Switch

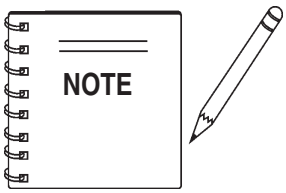

The CLOSED position of the choke lever enriches the fuel mixture for starting a COLD engine. The OPEN position provides the correct fuel mixture for normal operation after starting, and for restarting a warm engine.

4. Place the ***Choke Lever*** (Figure 14) in the "***CLOSED*** " position.

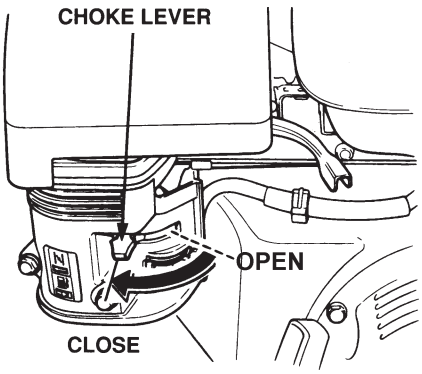

Figure 14. Choke Lever

CAUTION

The engine speed has been set at the factory. Changing the governor speed could damage the blade and/or the saw.

5. Rotate the ***throttle lever*** (Figure 15) halfway between ***fast*** and ***slow*** for starting. All sawing is done at ***full throttle***. The engine governor speed is factory set to ensure optimum blade operating speeds.

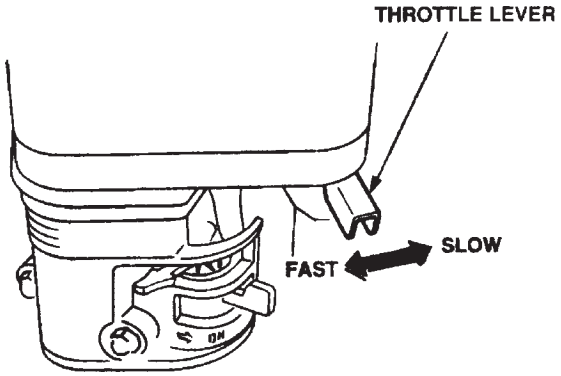

Figure 15. Throttle Lever

6. Grasp the starter grip (Figure 15) and slowly pull it out. The resistance becomes the hardest at a certain position, corresponding to the compression point. Pull the starter grip briskly and smoothly for starting.

CAUTION

DO NOT pull the starter rope all the way to the end. **DO NOT** release the starter rope after pulling. Allow it to rewind as soon as possible.

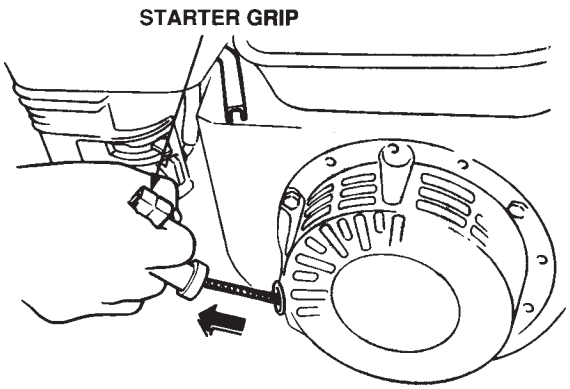

Figure 16. Starter Grip

7. If the engine has started, slowly return the choke lever (Figure 14) to the ***"OPEN"*** position. If the engine has not started repeat steps 1 through 6.

8. Before the saw is placed into operation, run the engine for several minutes. Check for fuel leaks, and noises that would associate with a loose guards and/or covers.

OPERATION

1. Start the engine. Rotate the throttle lever (Figure 15) toward full throttle.

WARNING

ALWAYS cut with the saw at **FULL THROTTLE.** Attempting to cut with the saw at less than full throttle could cause the blade to bind or stop abruptly in the slab resulting in serious injury to the operator or others in the area.

WARNING

ALWAYS keep clear of ***rotating*** or ***moving*** parts while operating this equipment.

2. To begin sawing, lower the rotating blade allowing it to cut to the preset depth.

3. When blade has reached full cutting depth, slowly walk behind the saw at a rate that will allow the engine to operate without losing optimum RPM.

CAUTION

DO NOT try to cut faster than the blade will allow. Cutting too fast will cause the blade to rise up out of the cut. Improper cutting rate can decrease the life of the engine and blades.

NOTE

Mark the cutting line clearly and always saw in a **STRAIGHT LINE ONLY**.

4. When the end of the cut has been reached, raise the blade out of the cut by pulling back on the handlebars (using a downward pressure) until the raise/lower rod drops into its slot with the blade in the raised position.

5. If cutting is complete, turn the engine off and wait for the blade to stop rotating.

MAINTENANCE

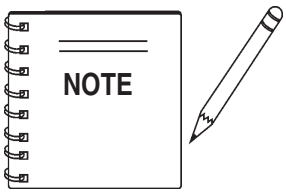

See the engine manual supplied with your machine for appropriate engine maintenance schedule and troubleshooting guide for problems.

CAUTION!

ALWAYS allow the engine to cool before servicing. **NEVER** attempt any maintenance work on a ***hot!*** engine.

WARNING

ALWAYS ensure that the engine **ON/OFF** switch is in the **"OFF"** position, (power cable **UNPLUGGED** on electric models), and that the arbor shaft has **COMPLETELY STOPPED ROTATING** before performing any of the the following operations:

- ***REMOVING* or *INSTALLING* blades**
- ***ADJUSTING* front or rear pointers**
- ***LUBRICATING* any components**
- ***REMOVING* engine mounting bolts**
- ***INSPECTING, ADJUSTING, OR REPLACING* drivebelt, arbor shaft, arbor shaft bearings or *ANY* engine part**

Saw Blade Removal and Installation

Saw blade removal and installation is covered on page 19.

Front Pointer Adjustment

The front pointer wheel has been set at the factory. Use these procedures only if the pointer is suspect of being out of alignment.

1. Chalk out a straight line on the prepared slab or cutting surface.
2. Use a 4 foot straight-edge or level by placing it flat against the blade.
3. Adjust the front pointer wheel so it just touches the side of the straight-edge or level.
4. Remove the straight-edge or level.
5. Position the front pointer and blade directly over the chalk line.
6. Start the saw and lower the blade onto the chalk line.
7. Begin cutting and make sure the blade follows the chalk line as closely as possible.
8. The pointer should follow the chalk line as well. If it does not, adjust the pointer by loosening then tightening the jam nuts on the pointer until the pointer follows the same path as the blade.

Chassis Lubrication

- **Blade Shaft Bearings -** Two zerk fittings are located at the lower-front area of the saw. Lubricate before daily use. Use a good quality automotive or general purpose grease. Check and lubricate more often if unit is under heavy use. Do not overfill bearings. Overfilling can damage the grease seals which can result in bearing exposure to dirt and contaminants which can then shorten the life of the bearings. Excess grease can also drip onto the cutting surface.

Drive Belt

Refer to pages 16 and 17 of this manual for Drive Belt adjustment procedures and Removal and Replacement procedures.

Engine

Follow the maintenance procedures outlined in the engine owner's manual.

Engine Oil Change

Drain the used oil while the engine is warm by the following:

Refer to Figure 16.

1. Place an oil pan or suitable container below the engine drain plug to catch the used oil.
2. Remove the filler cap/dipstick and the drain plug.
3. Drain the oil completely and reinstall the drain plug. Ensure the drain plug is tightened securely.

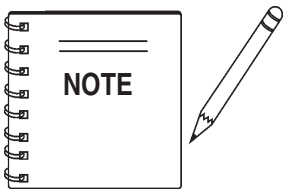

Dispose of used oil properly. **DO NOT** pour used oil on the ground, down a drain, or throw in the trash. Used oil can generally be taken to your local recycling center or service station for reclamation.

4. Make sure the engine is in a level position and fill to the outer edge of the oil filler hole with the recommended oil. (See Table 4.) Engine oil capacity is 1.16 US quart (1.1 liter).

5. Screw in the filler cap/dipstick securely.

CAUTION

Running the engine with a low oil level can cause engine damage.

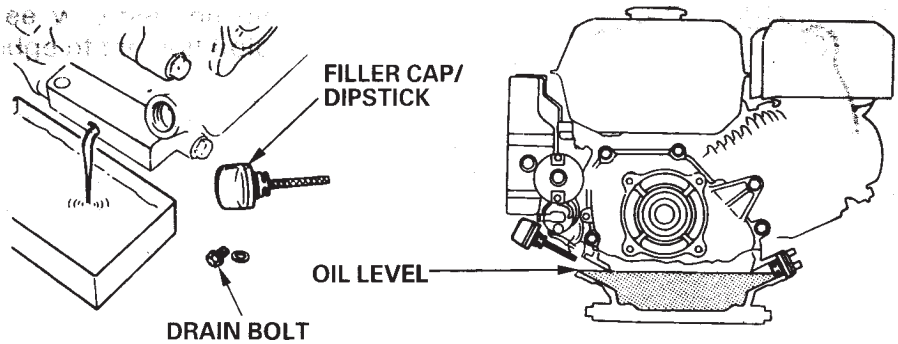

Figure 17. Engine Oil Change

TABLE 5. BLADE TROUBLESHOOTING		
SYMPTOM	**POSSIBLE PROBLEM**	**SOLUTION**
Blade slows or stops cutting.	Blade too hard for the material being cut?	Consult Dealer or Multiquip for correct blade. Try cutting very soft material (sandstone, silica brick, cinder block) to "Redress" the blade.
	Engine torque diminished because of loose V-belt?	Tighten and/or replace V-Belts.
	Insufficient engine power?	Check throttle setting. Check Engine horsepower.
	Improper direction of rotation?	Check that the blade is properly oriented and rotational arrow points in a "Down-Cutting" direction.
	Blade is slipping on the blade shaft?	Check that the blade & flange pin are properly installed on the blade shaft.
Blade does not cut straight and/or true.	Blade being used on misaligned saw?	Check blade shaft bearings and alignment integrity.
	Blade is excessively hard for the material being cut?	Check specification of the blade with the material being cut. Consult Dealer or Multiquip for information.
	Blade being used at improper RPM?	Ensure blade surface feet per minute speed (SFPM) is approximately 6,000.
	Blade improperly mounted on arbor shoulders and flanges?	Ensure blade is properly affixed on the blade shaft.
	Excessive force applied to blade while cutting?	**DO NOT** force the blade in the cut. Apply a slow and steady pace when sawing.
Blade discoloring, crackling and/or wearing excessively.	Blades too hard for the material being cut?	Consult Dealer or Multiquip for correct blade. Try cutting very soft material (sandstone, silica brick, cinder block) to "Redress" the blade.
	Blade improperly mounted on arbor shoulders and flanges?	Ensure blade is properly affixed on the blade shaft.
	Blade not receiving enough cooling water or air?	Ensure proper flow & volume of water is provided for wet cutting blades. Ensure sufficient cooling air is circulated about a dry cutting blade.
	Arbor hole out of round?	Ensure blade is properly affixed on the blade shaft.
	Incorrect blade chosen for material being cut?	Check specification of the blade with the material being cut. Consult Dealer or Multiquip for information.
	Excessive force applied to blade while cutting?	**DO NOT** force the blade in the cut. Apply a slow and steady pace when sawing.

TABLE 6. TROUBLESHOOTING (ENGINE)

SYMPTOM	POSSIBLE CAUSE	SOLUTION
Difficult to start, "fuel is available, but no SPARK at spark plug".	Spark plug bridging?	Check gap, insulation or replace spark plug.
	Carbon deposit on spark plug?	Clean or replace spark plug.
	Short circuit due to deficient spark plug insulation?	Check spark plug insulation, replace if worn.
	Improper spark plug gap?	Set to proper gap.
	Ignition coil defective?	Replace ignition coil.
Difficult to start, "fuel is available, and SPARK is present at the spark plug".	ON/OFF switch is shorted?	Check switch wiring, replace switch.
	Improper spark gap, points dirty?	Set correct spark gap and clean points.
	Condenser insulation worn or short circuiting?	Replace condenser.
	Spark plug wire broken or short circuiting?	Replace defective spark plug wiring.
Difficult to start, "fuel is available, spark is present and compression is normal".	Wrong fuel type?	Flush fuel system, and replace with correct type of fuel.
	Water or dust in fuel system?	Flush fuel system.
	Air cleaner dirty?	Clean or replace air cleaner.
	Choke Open?	Close Choke.
Difficult to start, "fuel is available, spark is present and compression is low".	Suction/exhaust valve stuck or protruded?	Re-seat valves.
	Piston ring and/or cylinder worn?	Replace piston rings and/or piston.
	Cylinder head and/or spark plug not tightened properly?	Torque cylinder head bolts and spark plug.
	Head gasket and/or spark plug gasket damaged?	Replace head and/or spark plug gaskets.
No fuel present at the carburetor.	Fuel not available in fuel tank (tank empy)?	Fill with correct type of fuel.
	Fuel filter clogged?	Replace fuel filter.
	Fuel tank cap breather hole clogged?	Clean or replace fuel tank cap.
	Air in fuel line?	Bleed fuel line.

TABLE 6. TROUBLESHOOTING (ENGINE, CONTINUED)

SYMPTOM	POSSIBLE CAUSE	SOLUTION
"Weak in power" compression is proper and does not misfire.	Air cleaner not clean?	Clean or replace air cleaner.
	Improper fuel level in carburetor?	Check float adjustment.
		Rebuild carburetor.
	Defective spark plug?	Clean or replace spark plug.
	Improper spark plug gap?	Set to proper gap.
"Weak in power" compression is proper but misfires.	Water in fuel system?	Flush fuel system and replace with correct type fuel.
	Ignition coil defective?	Replace ignition coil.
	Dirty spark plug?	Clean or replace spark plug.
Engine overheats.	Wrong fuel type?	Flush fuel system, and replace with correct type of fuel.
	Spark plug heat value improper?	Replace with correct type of spark plug.
	Cooling fins dirty?	Clean cooling fins.
Rotational speed fluctuates.	Governor adjusted correctly?	Adjust governor.
	Governor spring defective or missing?	Replace governor spring.
	Fuel flow restricted?	Check entire fuel system for leaks or clogs.
Recoil starter malfunction.	Recoil mechanism clogged with dust and dirt?	Clean recoil assembly with soap and water.
	Spiral spring loose?	Replace spiral spring.

The following section explains the different symbols and remarks used in the Parts section of this manual. Use the help numbers found on the back page of the manual if there are any questions.

The contents and part numbers listed in the parts section are subject to change ***without notice***. Multiquip does not guarantee the availibility of the parts listed.

Sample Parts List:

NO.	PART NO.	PART NAME	QTY.	REMARKS
1	12345	BOLT	1	INCLUDES ITEMS W/*
2*		WASHER, 1/4 IN.		NOT SOLD SEPARATELY
2*	12347	WASHER, 3/8 IN.	1	MQ-45T ONLY
3	12348	HOSE	A/R	MAKE LOCALLY
4	12349	BEARING	1	S/N 2345B AND ABOVE

NO. Column

Unique Symbols - All items with same unique symbol (*, #, +, %, or >) in the number column belong to the same assembly or kit, which is indicated by a note in the "Remarks" column.

Duplicate Item Numbers - Duplicate numbers indicate multiple part numbers are in effect for the same general item, such as different size saw blade guards in use or a part that has been updated on newer versions of the same machine.

NOTE

When ordering a part that has more than one item number listed, check the remarks column for help in determining the proper part to order.

PART NO. Column

Numbers Used - Part numbers can be indicated by a number, a blank entry, or TBD.

TBD (To Be Determined) is generally used to show a part that has not been assigned a formal part number at time of publication.

A blank entry generally indicates that the item is not sold separately or is not sold by Multiquip. Other entries will be clarified in the "Remarks" Column.

QTY. Column

Numbers Used - Item quantity can be indicated by a number, a blank entry, or A/R.

A/R (As Required) is generally used for hoses or other parts that are sold in bulk and cut to length.

A blank entry generally indicates that the item is not sold separately. Other entries will be clarified in the "Remarks" Column.

REMARKS Column

Some of the most common notes found in the "Remarks" Column are listed below. Other additional notes needed to describe the item can also be shown.

Assembly/Kit - All items on the parts list with the same unique symbol will be included when this item is purchased.

Indicated by:
"INCLUDES ITEMS W/(unique symbol)"

Serial Number Break - Used to list an effective serial number range where a particular part is used.

Indicated by:
"S/N XXXXX AND BELOW"
"S/N XXXX AND ABOVE"
"S/N XXXX TO S/N XXX"

Specific Model Number Use - Indicates that the part is used only with the specific model number or model number variant listed. It can also be used to show a part is NOT used on a specific model or model number variant.

Indicated by:
"XXXXX ONLY"
"NOT USED ON XXXX"

"Make/Obtain Locally" - Indicates that the part can be purchased at any hardware shop or made out of available items. Examples include battery cables, shims, and certain washers and nuts.

"Not Sold Separately" - Indicates that an item cannot be purchased as a separate item and is either part of an assembly/kit that can be purchased, or is not available for sale through Multiquip.

SUGGESTED SPARE PARTS

MQ STREET PRO 1 CONCRETE/ASPHALT SAW

1 TO 3 UNITS WITH HONDA 13 HP GX390K1QWT2/GX390U1QWT2 ENGINES AND 5HP ELECTRIC MOTOR.

1 to 3 Units

Qty.	P/N	Description
3	20478	HAND GRIP
4	2621	GREASE ZERK, SPINDLE BEARING
4	1162 A	CAP, GREASE ZERK
3	13249	BELT (3VX315) 13HP HONDA
3	16779-006	BELT (3VX300) 5HP ELECTRIC MOTOR
3	9807956846	SPARK PLUG, BPR6ES, NKG
1✖	17620ZH7023	TANK CAP, BLACK, (S/N 3605677 AND BELOW)
1✖	17620Z0T305	TANK CAP, CHROME PLATED, (S/N 3605678 AND ABOVE)
1◊	17620Z0T305	TANK CAP, CHROME PLATED
2	17210ZE3010	AIR CLEANER ELEMENT
1✖	28462ZV7003	ROPE, RECOIL STARTER
1◊	28462ZE3W01	ROPE, RECOIL STARTER
2	28086001	8" REAR WHEEL (GAS MODEL)
2	23668001	6" REAR WHEEL (ELECTRIC MODEL)
2	26221001	4" FRONT WHEEL
1	29013001	1-1/2" BOX WRENCH

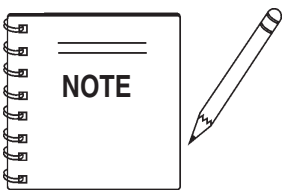

The contents of this parts catalog are subject to change without notice.

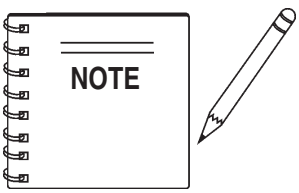

✖ GX390K1QWT2: Model S/N DECEMBER 2005 AND BELOW
◊ GX390U1QWT2: Model S/N JANUARY 2006 AND ABOVE

DECALS

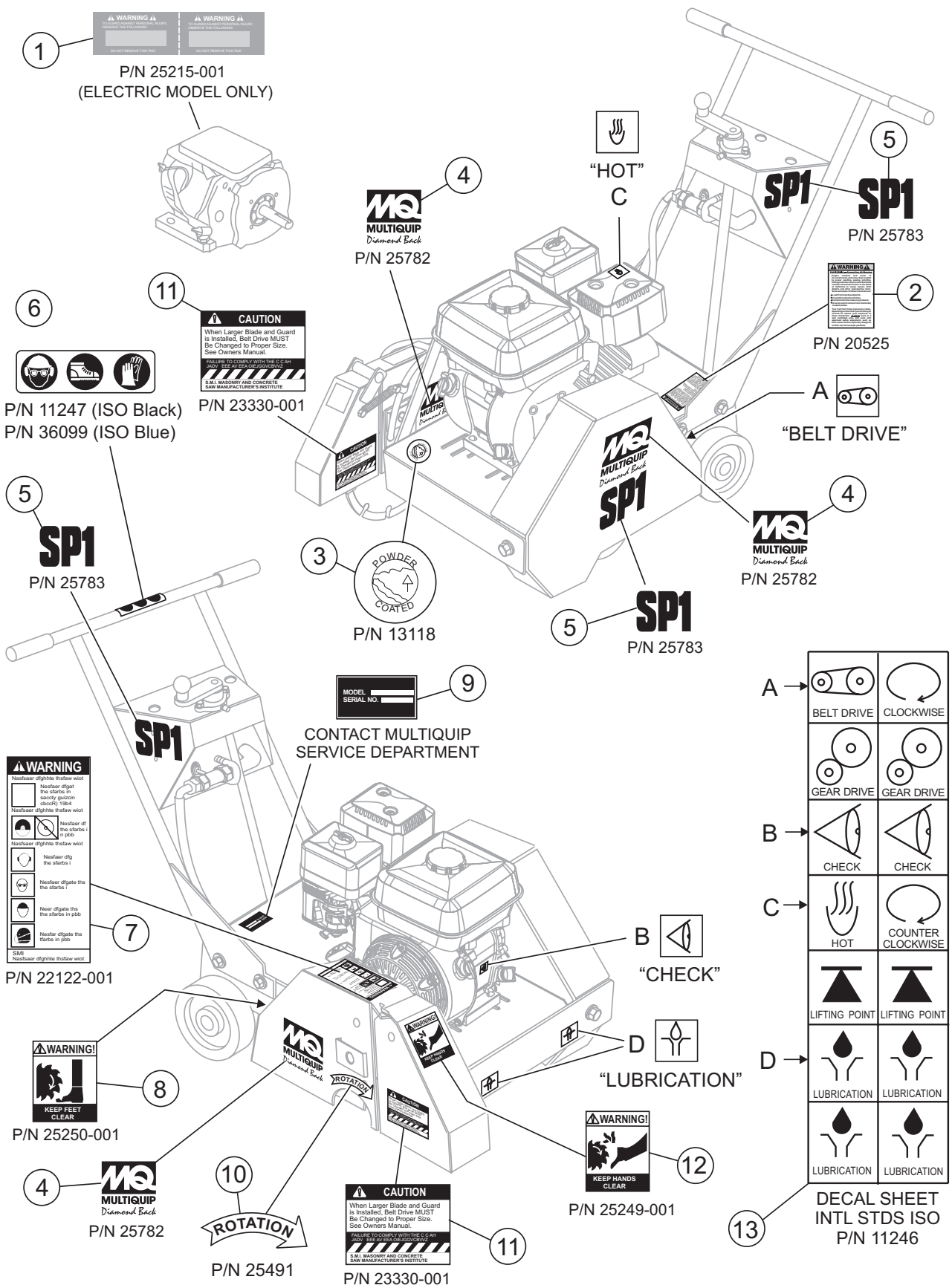
1
P/N 25215-001
(ELECTRIC MODEL ONLY)
4
P/N 25782
"HOT"
C
5
P/N 25783
2
P/N 20525
11
CAUTION
When Larger Blade and Guard is Installed, Belt Drive MUST Be Changed to Proper Size. See Owners Manual.
P/N 23330-001
6
P/N 11247 (ISO Black)
P/N 36099 (ISO Blue)
A
"BELT DRIVE"
5
P/N 25783
3
POWDER COATED
P/N 13118
4
P/N 25782
5
P/N 25783
9
MODEL
SERIAL NO.
CONTACT MULTIQUIP
SERVICE DEPARTMENT
WARNING
7
P/N 22122-001
B
"CHECK"
D
"LUBRICATION"
WARNING!
KEEP FEET CLEAR
8
P/N 25250-001
4
P/N 25782
10
ROTATION
P/N 25491
CAUTION
When Larger Blade and Guard is Installed, Belt Drive MUST Be Changed to Proper Size. See Owners Manual.
11
P/N 23330-001
WARNING!
KEEP HANDS CLEAR
12
P/N 25249-001
A
BELT DRIVE
CLOCKWISE
GEAR DRIVE
GEAR DRIVE
B
CHECK
CHECK
C
HOT
COUNTER CLOCKWISE
LIFTING POINT
LIFTING POINT
D
LUBRICATION
LUBRICATION
LUBRICATION
LUBRICATION
13
DECAL SHEET
INTL STDS ISO
P/N 11246

DECALS

NO.	PART NO.	PART NAME	QTY.	REMARKS
1	25215-001	DECAL, WARNING	1	ELECTRIC MODEL ONLY
2	20525	DECAL, PROP 65 WARNING	1	
3	13118	DECAL, POWDER COATED	1	
4	25782	DECAL, MQ DIAMONDBACK	3	
5	25783	DECAL, SP 1	3	
6	11247	DECAL, ISO SAFETY GEAR	1	
7	22122-001	DECAL, WARNING	1	
8	25250-001	DECAL, WARNING FEET	1	
9		SERIAL NUMBER PLATE	1	CONTACT PARTS DEPT.
10	25491	DECAL, ROTATION CW	1	
10	25678	DECAL, ROTATION CCW	1	
11	23330-001	DECAL, CAUTION BLADE GUARD	1	
12	25249-001	DECAL, WARNING HANDS	1	
13	11246	DECAL SHEET, INTL STDS	1	

ENGINE, BELTS AND PULLEYS

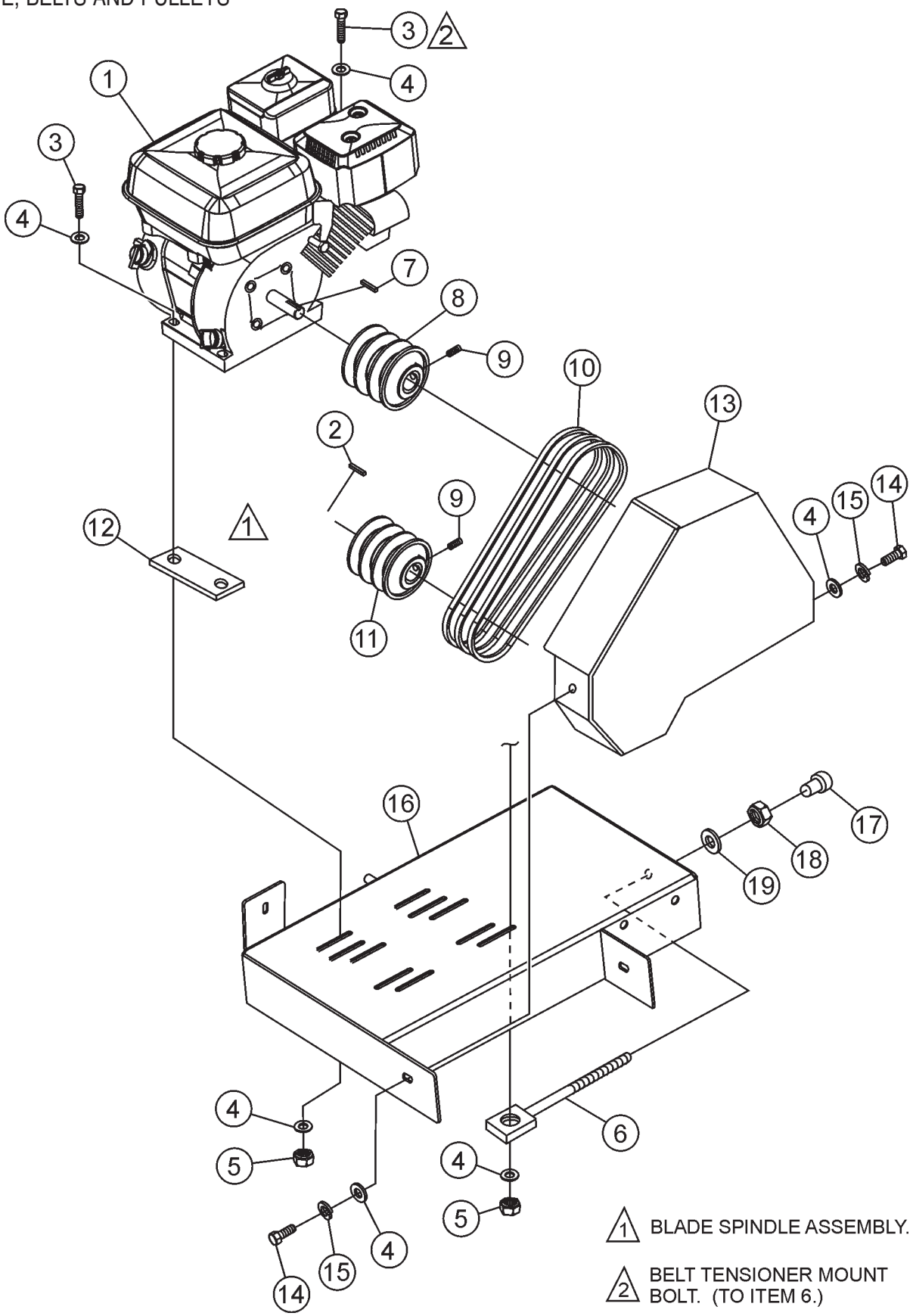

ENGINE, BELTS AND PULLEYS

NO.	PART NO.	PART NAME	QTY.	REMARKS
1	15103	ENGINE 13 HP HONDA RED	1	
2	9152	KEY, 1/4 X 1-3/4	1	
3	0669A	SCREW. HHCS 5/16-18 x 2-1/4"	4	
4	0300B	FLAT WASHER 5/16"	10	
5	5283	NUT, 5/16 - 18 LOCK	4	
6	23811-352	BELT TENSIONER	2	
7	6059B	SQUARE KEY, 1/4 X 2	1	
8	23665-001	PULLEY, ENGINE	1	
9	25354	SCREW, SHS 1/4 - 20 X 1/2 ALLOY	4	
10	13249	BELT, 3VX315	3	
11	23665-009	PULLEY, SPINDLE	1	
12	27044-001	SPACER	2	
13	26105-751	BELT GUARD, 13HP RED	1	
14	0202	SCREW, 5/16 - 12 X 1	2	
15	161C	WASHER, LOCK 5/16	2	
16	26112-354	FRAME	1	
17	10779-011	CAP	2	
18	10133	NUT, 3/8 - 16	1	
19	10136	WASHER, FLAT 3/8	1	

ELECTRIC MOTOR

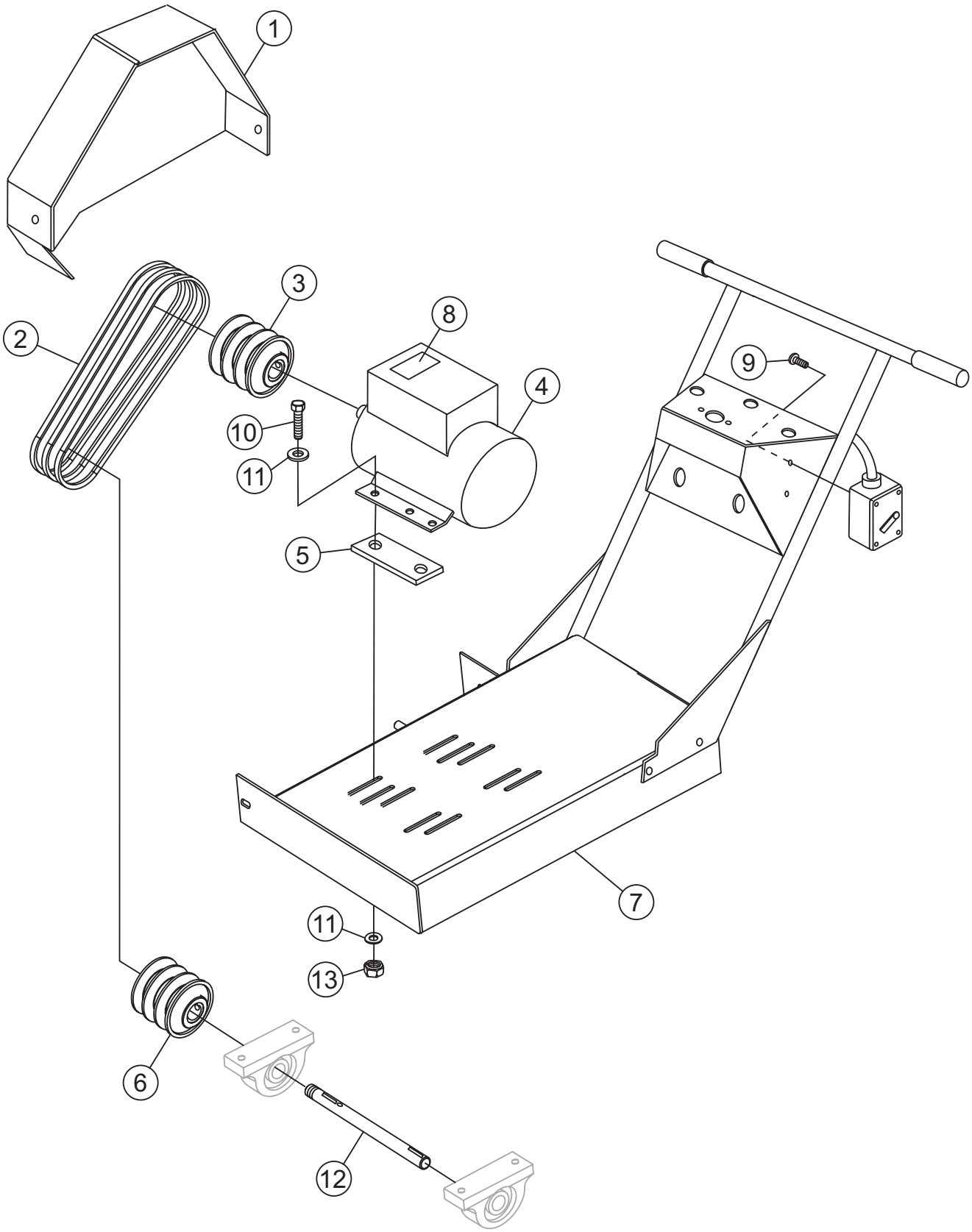

ELECTRIC MOTOR

NO.	PART NO.	PART NAME	QTY.	REMARKS
1	26142-754	BELT GUARD RED	1	
2	16779-006	BELT - 3VX300	3	
3	23665-005	PULLEY (MOTOR)	1	
4	26152-502	MOTOR, 5 HP ELECTRIC	1	
5	27084-002	SPACER	2	
6	23665-009	PULLEY (SPINDLE)	1	
7	26145-351	FRAME	1	
8	25215-001	LABEL, WARNING	1	
9	23865-001	SCREW, 10 - 24 X 3/4	2	
10	2623	SCREW, HHC 5/16 -18 x 1-1/4"	4	
11	07030-005	FLAT WASHER 5/16	8	
12	26136-004	SPINDLE	1	
13	5283	NUT, 5/16 - 18 LOCK	4	

UNDERCARRIAGE

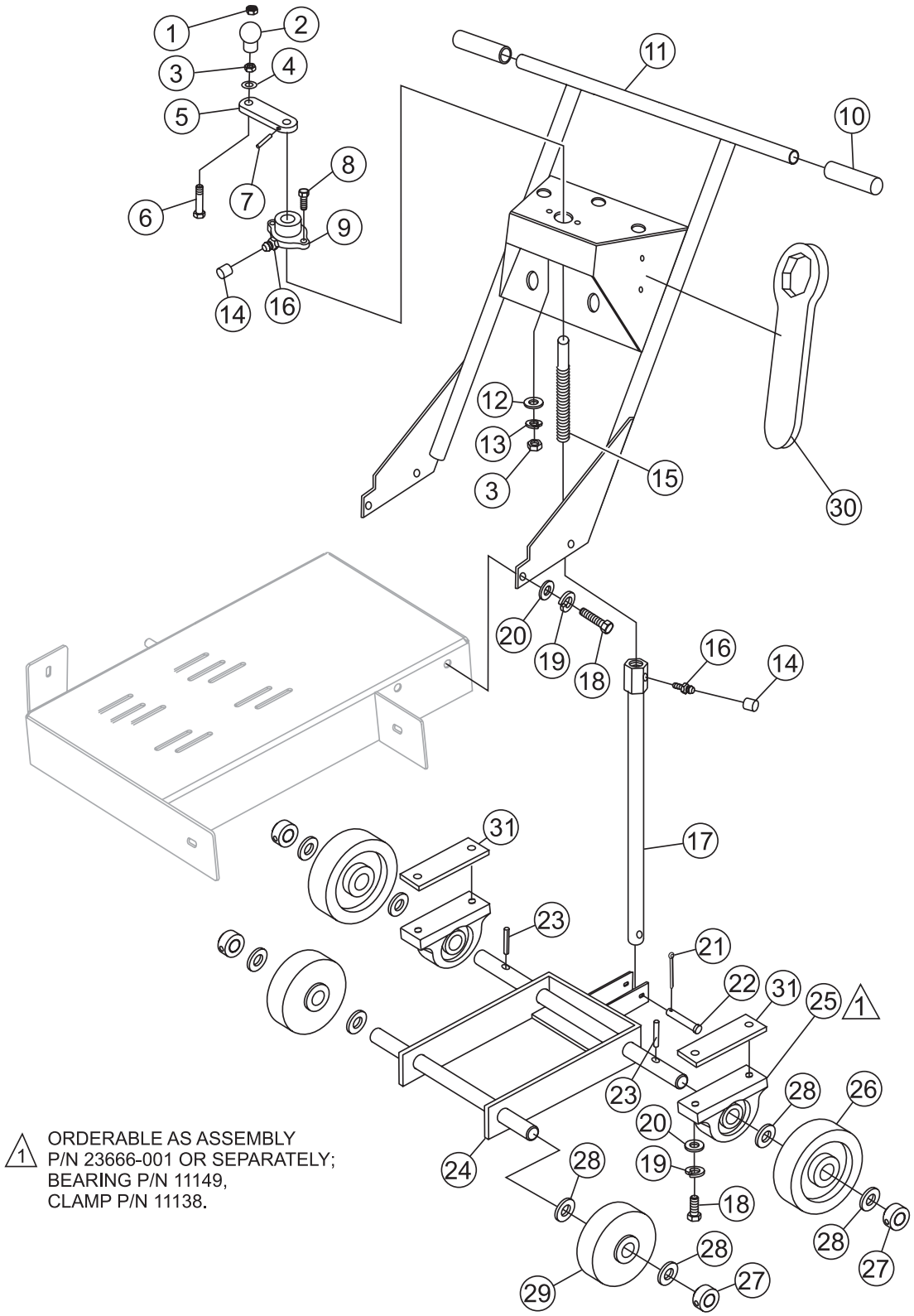

UNDERCARRIAGE

NO.	PART NO.	PART NAME	QTY.	REMARKS
1	08233-005	LOCKNUT, 5/16 - 18	1	
2	18637-001	KNOB	1	
3	0161D	HEX NUT, 5/16 - 18	3	
4	25496	BUSHING	1	
5	28808-002	CRANK HANDLE	1	
6	26164-001	LOCK PIN	1	
7	4568	ROLL PIN 3/16 X 1	1	
8	07046-011	BOLT, CARRIAGE 5/16-18 X 1-1/2	2	
9	23284-001	FLANGE BEARING	1	
10	26138-001	HAND GRIP	2	
11	26126-352	HANDLE	1	
12	0300B	FLATWASHER 5/16	2	
13	0161C	LOCKWASHER 5/16	2	
14	1162A	CAP, GREASE ZERK	4	
15	26137-002	ACME SCREW	1	
16	2621	ZERK, GREASE STR 1/4 - 28	1	
17	29408-352	JACK ARM (SUPPORT TUBE)	1	
18	0205	SCREW, HHCS 3/8 - 16 X 1-1/4	8	
19	0166A	LOCKWASHER, 3/8	8	
20	10136	FLATWASHER 3/8	8	
21	6014B	COTTER PIN 3/32 X 1	1	
22	08326-019	PIN 3/8 X 2-5/16	1	
23	07402-024	ROLL PIN 1/8 X 1-1/2	2	
24	26120-352	WHEEL BASE ASSEMBLY	1	
25	23666-001	CLAMP & BEARING ASSEMBLY	2	
25A	11138	CLAMP ASSEMBLY	2	
25B	11149	BEARING	2	
26	23668-001	REAR WHEEL, (6 X 2 ELECTRIC MODEL)	2	
26	28086-001	REAR WHEEL, (8X2 GAS MODEL)	2	
27	26133-001	LOCKING COLLAR	4	
28	8151	FLATWASHER, 3/4	6	
29	26121-001	FRONT WHEEL	2	
30	29013-001	1-1/2" BOX WRENCH	1	
31	25677	SPACER, REAR AXLE BEARING	2	

BLADE ASSEMBLY & WATER SYSTEM

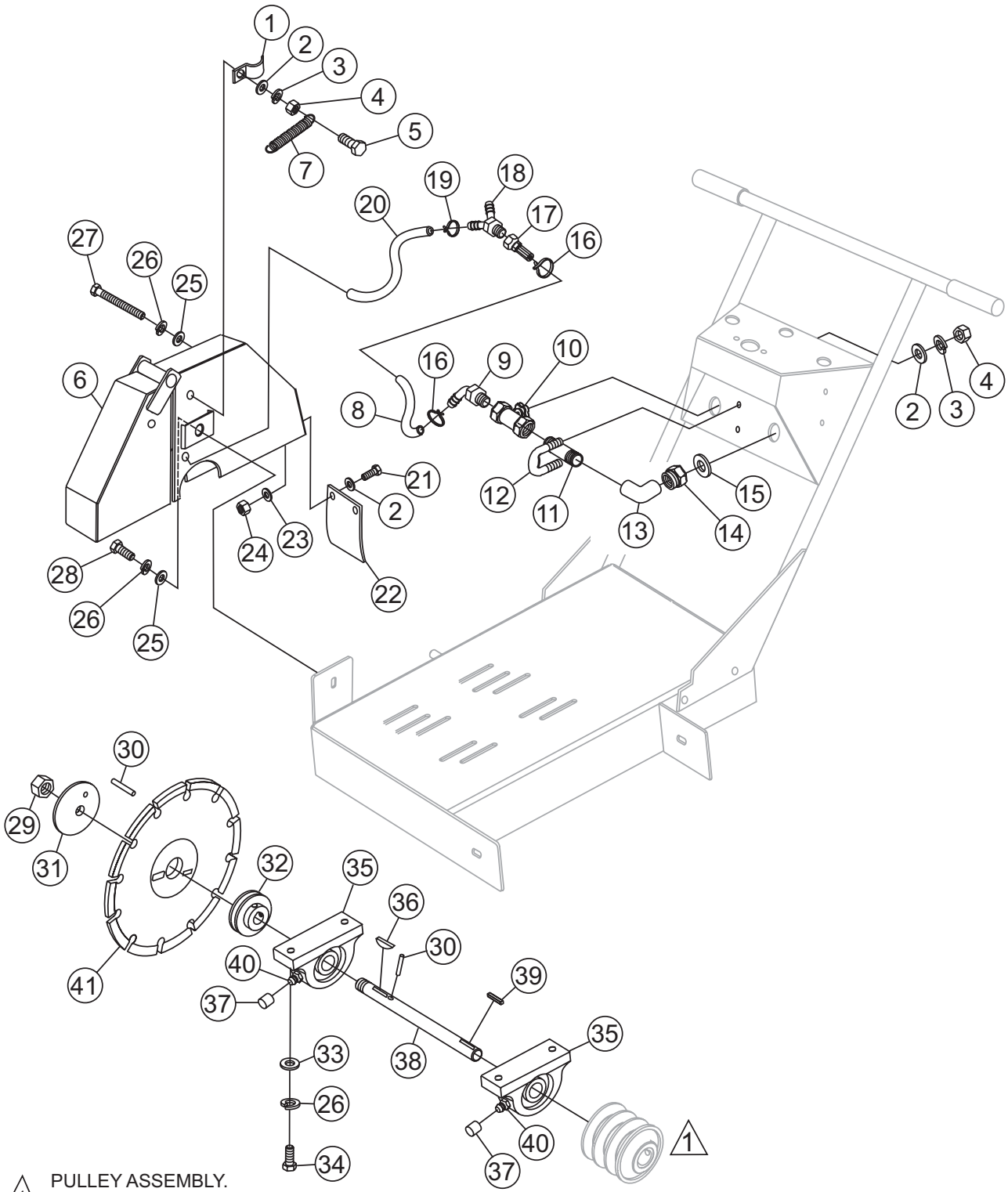

1 PULLEY ASSEMBLY.
SEE PAGE 30.

BLADE ASSEMBLY & WATER SYSTEM

NO.	PART NO.	PART NAME	QTY.	REMARKS
1	22129-001	CLAMP	2	
2	0948	FLATWASHER, 1/4	5	
3	0181B	LOCK WASHER 1/4	5	
4	0949	HEX NUT 1/4 - 20	5	
5	0424	SCREW, HHCS 1/4 - 20 X 1	4	
6	29406-753	BLADE GUARD 18" RED (GAS)	1	
6	29406-752	BLADE GUARD 16" RED (ELECT.)	1	
7	18626-001	SPRING	2	
8	23255-011	HOSE 26"	1	
9	23566-001	BARBED FITTING 90 DEG.	1	
10	35122-402	VALVE	1	
11	11708	NIPPLE 1/2	1	
12	16378-005	U-BOLT 1/4	1	
13	23252-002	ELBOW 1/2	1	
14	26134-001	CONNECTOR, GARDEN HOSE	1	
15	13336-001	WASHER, RUBBER	1	
16	12694-006	HOSE CLAMP	2	
17	24778-001	SWIVEL CONNECTOR	1	
18	24642-001	Y-FITTING	1	
19	12694-004	HOSE CLAMP	2	
20	60021	HOSE, 1.0 FT.	2	SOLD PER FOOT
21	0131A	SCREW, HHCS 1/4 - 20 X 3/4	2	
22	28729-005	CHIP GUARD	1	
23	10930	FENDER WASHER 1/4	2	
24	10024	LOCKNUT, 1/4 - 20	2	
25	10136	FLATWASHER 3/8	6	
26	0166A	LOCKWASHER 3/8	2	
27	06501-032	SCREW, HHCS 3/8 - 16 X 4	1	
28	0205	SCREW, HHCS 3/8 - 16 X 1	1	
29	06922-003	NUT L.H. 1 - 1/4	1	
30	24894-020	DOWEL PIN 3/8 X 1-1/4	2	
31	26928-004	FLANGE, OUTER	1	
32	28811-001	FLANGE, INNER	1	
33	4001	FLATWASHER	4	
34	1284	SCREW, HHCS 3/8 - 16 X 1-1/2	4	
35	3200	BEARING	2	
36	0125	WOODRUFF KEY 1/4 X 1	1	
37	1162A	CAP, GREASE ZERK	2	
38	26135-002	SPINDLE	1	
39	9152	KEY 1/4 X 1-3/4	1	
40	2621	GREASE ZERK	2	
41		BLADE, DIAMOND BACK	1	CONTACT SERVICE DEPT.

POINTER ASSEMBLY

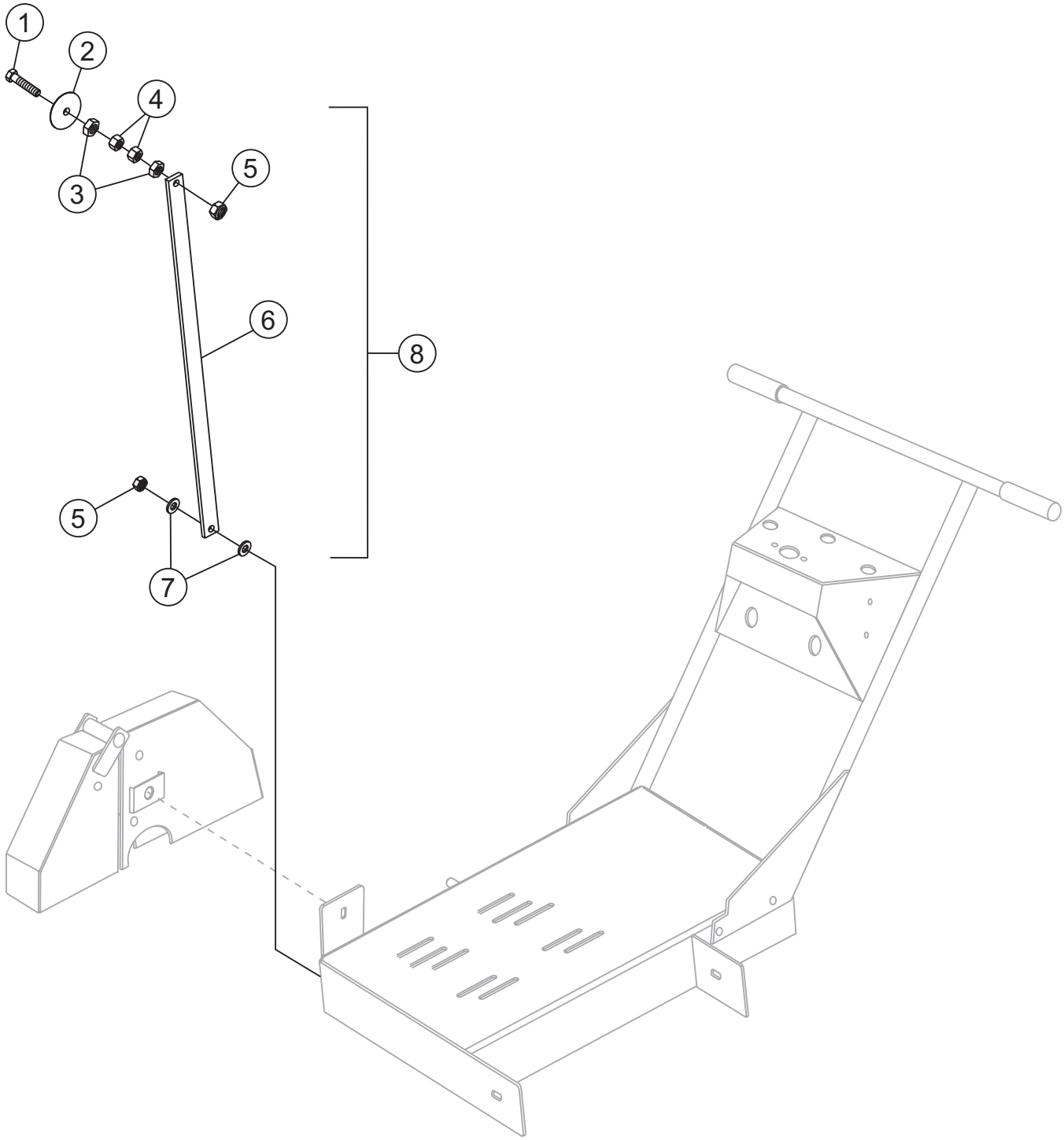

POINTER ASSEMBLY

NO.	PART NO.	PART NAME	QTY.	REMARKS
1	21017	SCREW, POINTER ARM	1	
2	29043-001	WHEEL, POINTER	1	
3	1007	NUT, HEX JAM 3/8 - 16	2	
4	1456	NUT, HEX FINISH 3/8 - 16	2	
5	10133	NUT, NYLOC 3/8 - 16	2	
6	27073-001	ARM, POINTER	1	
7	10136	WASHER, FLAT 3/8	2	
8	29042-501	INDICATOR ASSEMBLY	1	

AIR CLEANER ASSY.

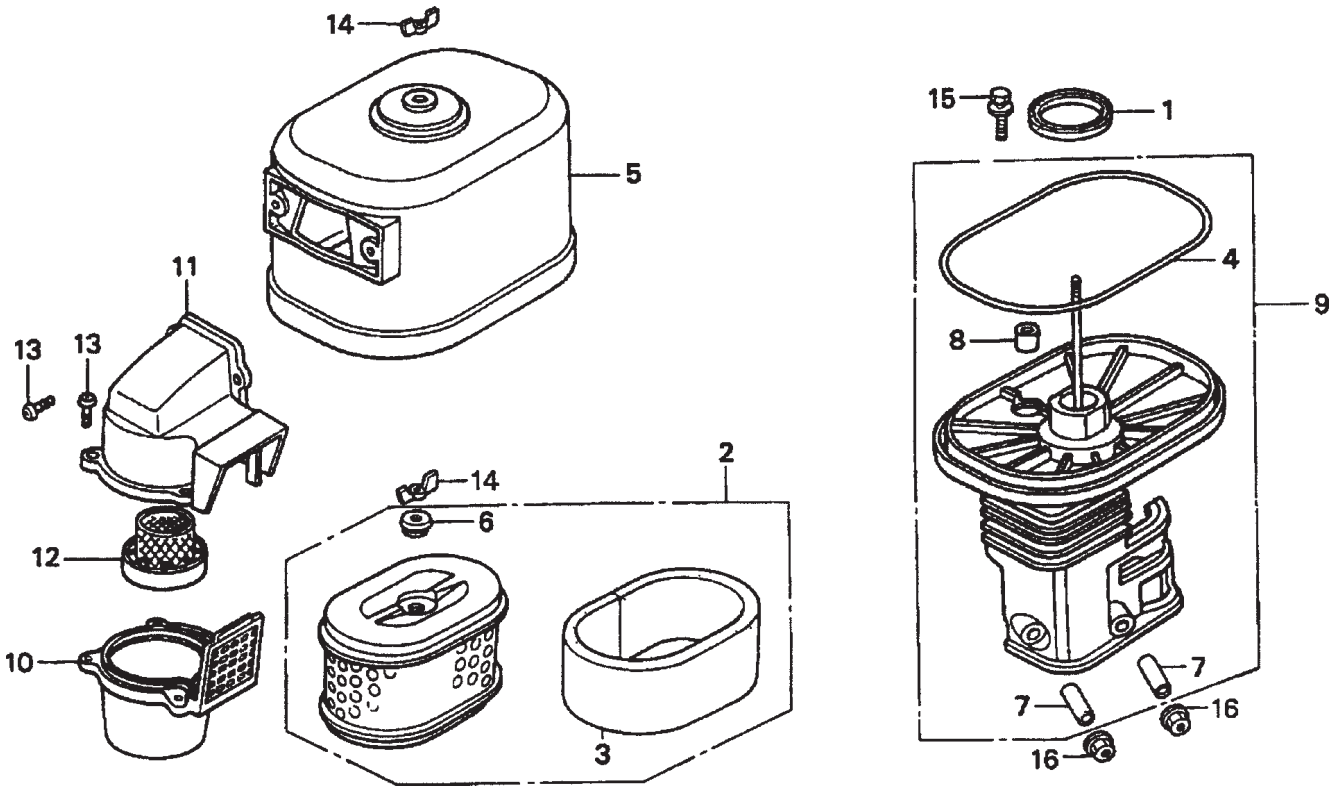

HONDA GX390K1QWT2/GX390U1QWT2 ENG. — AIR CLEANER ASSY.

AIR CLEANER ASSY.

NO.	PART NO.	PART NAME	QTY.	REMARKS
1✖	16271ZE2000	GASKET, ELBOW	1	
1◊	16271ZE2010	GASKET, ELBOW	1	
2	17210ZE3010	ELEMENT, AIR CLEANER	1	INCLUDES ITEMS W/*
3*	17218ZE3000	FILTER, OUTER	1	
4#	17219ZE3840	SEAL, AIR CLEANER COVER	1	
5	17230ZE3841	COVER, AIR CLEANER (CYCLONE)	1	
6*	17232891000	GROMMET, AIR CLEANER	1	
7#	17238ZE2310	COLLAR, AIR CLEANER	2	
8#	17239ZE3840	COLLAR B, AIR CLEANER	1	
9	17410ZE3840	ELBOW, AIR CLEANER	1	INCLUDES ITEMS W/#
10✖	17470ZE3841	CASE, PRE AIR CLEANER	1	
10◊	17470ZE3842	CASE, PRE AIR CLEANER	1	
11	17475ZE3841	CAP, PRE AIR CLEANER	1	
12	17476ZE3841	GUIDE, PRE AIR CLEANER	1	
13	90142MB0000	SCREW, PAN 5X16.5	5	
14	90325044000	WINGNUT, TOOL BOX SETTING	2	
15	90009ZE2003	BOLT- WASHER 6X22	1	
16	9405006000	NUT, FLANGE 6MM	2	

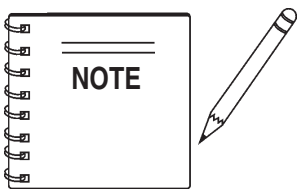

✖ GX390K1QWT2: Model S/N DECEMBER 2005 AND BELOW
◊ GX390U1QWT2: Model S/N JANUARY 2006 AND ABOVE

CAMSHAFT ASSY.

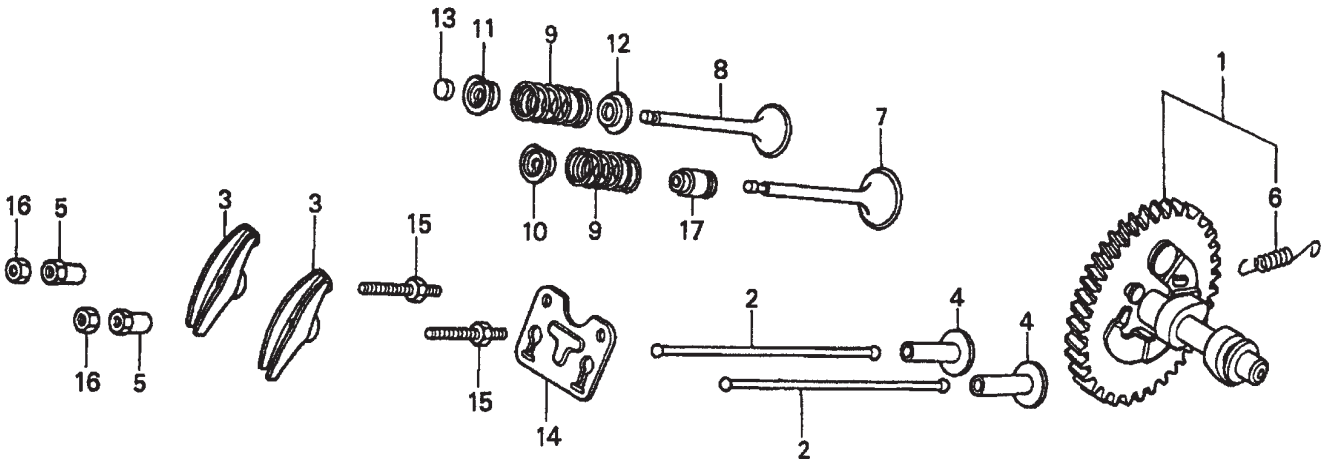

CAMSHAFT ASSY.

NO.	PART NO.	PART NAME	QTY.	REMARKS
1	14100ZF6W01	CAMSHAFT ASSEMBLY	1	INCLUDES ITEM W/*
2	14410ZE3013	ROD, PUSH	2	
3	14431ZE2010	ARM, VALVE ROCKER	2	
4	14441ZE2000	LIFTER, VALVE	2	
5	14451ZE1013	PIVOT, ROCKER ARM	2	
6*	14568ZE1000	SPRING, WEIGHT RETURN	1	
7	14711ZE3000	VALVE, INTAKE	1	
8	14721ZE3000	VALVE, EXHAUST	1	
9	14751ZE2003	SPRING, VALVE	2	
10	14771ZE2000	RETAINER,INTAKE VALVE SPRING	1	
11	14773ZE2000	RETAINER, EXHAUST VALVE SPRING	1	
12	14775ZE2010	SEAT, VALVE SPRING	1	
13	14781ZE2000	ROTATOR, VALVE	1	
14	14791ZE2010	PLATE, PUSH ROD GUIDE	1	
15	90012ZE0010	BOLT, PIVOT 8MM	2	
16	90206ZE1000	NUT, PIVOT ADJ.	2	
17	12209ZE8003	SEAL, VALVE STEM	1	

CARBURETOR ASSY.

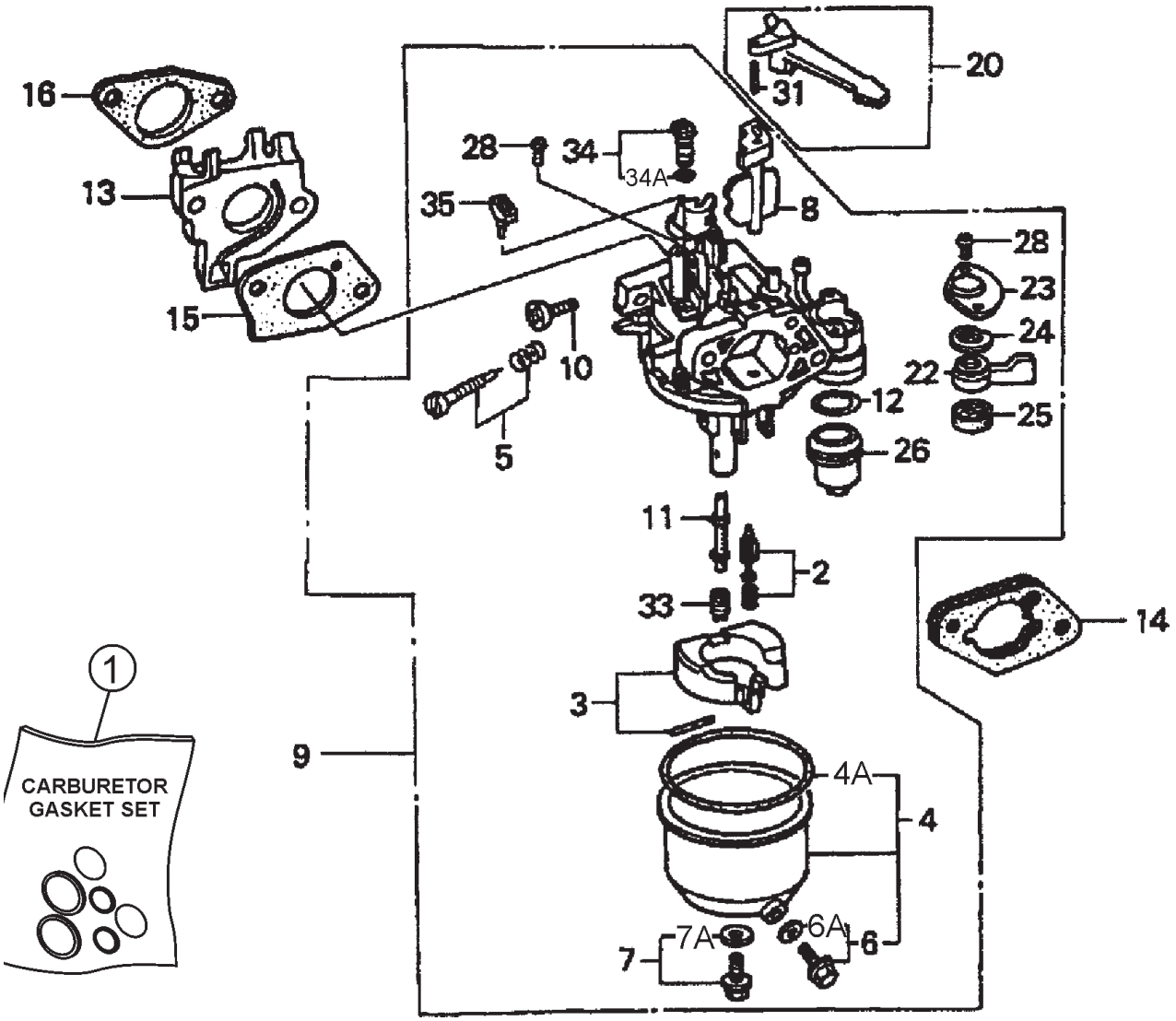

CARBURETOR ASSY.

NO.	PART NO.	PART NAME	QTY.	REMARKS
1	16010ZE2812	CARBURETOR, GASKET SET	1	INCLUDES ITEMS W/+
2$	16011ZA0931	VALVE SET, FLOAT	1	
3$	16013ZA0931	FLOAT SET	1	
4$	16015ZE8005	CHAMBER SET, FLOAT	1	INCLUDES ITEM 4A
				INCLUDES ITEM W/>
4A+		GASKET, CHAMBER SET FLOAT		NOT SOLD SEPARATELY
5$	16016ZH7W01	SCREW SET, PILOT	1	
6$>	16024ZE1811	SCREW SET, DRAIN,	1	INCLUDES ITEM 6A
6A+		GASKET, SCREW SET DRAIN		NOT SOLD SEPARATELY
7$	16028ZE0005	SCREW SET	1	INCLUDES ITEM 7A
7A+		GASKET, SCREW SET		NOT SOLD SEPARATELY
8$	16044ZE3W20	CHOKE SET	1	
9$	16100ZF6V21	CARBURETOR ASSY. (BE85C B)	1	INCLUDES ITEMS W/$
10$	16124ZE0005	SCREW, THROTTLE STOP	1	
11$	16166ZF6W10	NOZZLE, MAIN	1	
12$+	16173001004	GASKET, FUEL STRAINER CUP	1	
13	16211ZF6000	INSULATOR, CARBURETOR	1	
14	16220ZA0702	SPACER, CARBURETOR	1	
15	16221ZF6800	GASKET, CARBURETOR	1	
16	16223ZE3W00	GASKET, INSULATOR	1	
20	16610ZE1000	LEVER, CHOKE (STD)	1	INCLUDES ITEM W/*
22$	16953ZE1812	LEVER, VALVE	1	
23$	16954ZE1812	PLATE, LEVER SETTING	1	
24$	16956ZE1811	SPRING, VALVE LEVER	1	
25$+	16957ZE1812	GASKET, VALVE	1	
26$	16967ZE0811	CUP, FUEL STRAINER	1	
28$	93500030061H	SCREW, PAN (3X6)	2	
31*	9430520122	PIN, SPRING (2X12)	1	
33$	99101ZH80950	JET, MAIN (#95) (OPTIONAL)	1	
33$	99101ZH80980	JET, MAIN (#98) (OPTIONAL)	1	
33$	99101ZH81000	JET, MAIN (#100)	1	
34$	99204ZA00450	JET SET, PILOT (#45)	1	INCLUDES ITEM 34A
34A+		GASKET, JET SET PILOT (#45)		NOT SOLD SEPARATELY
35$	16172ZE3W10	COLLAR, SET	1	

CONTROL ASSY.

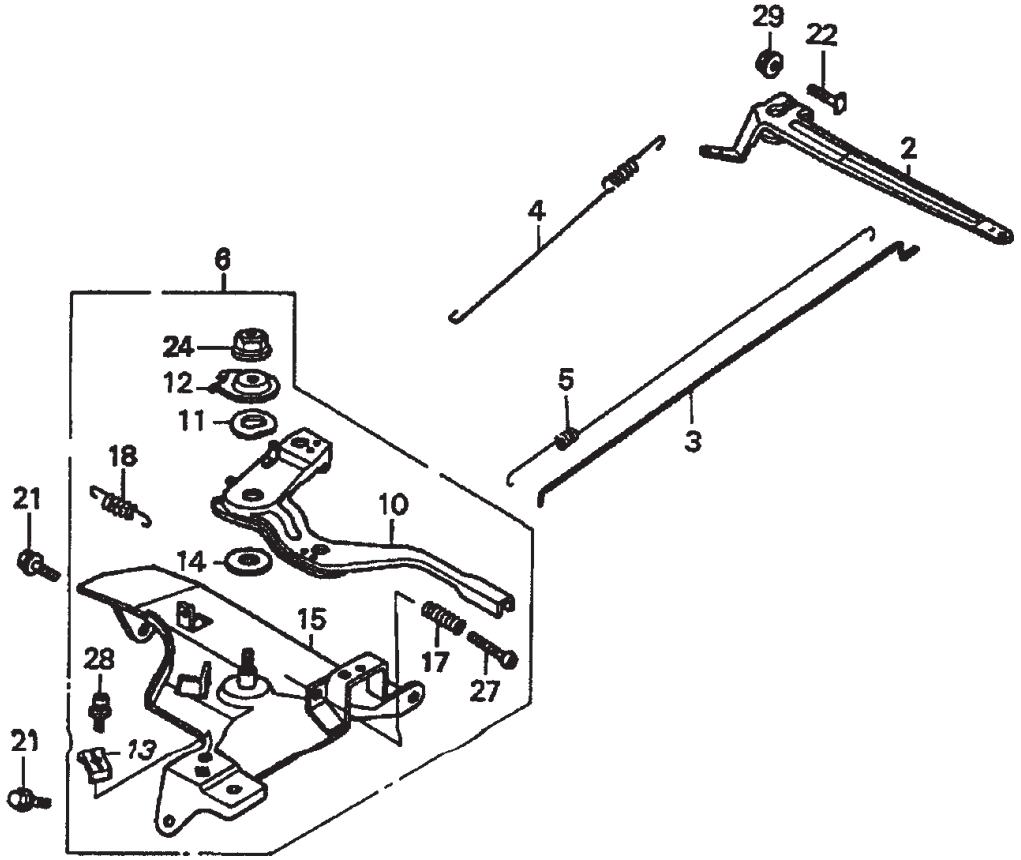

CONTROL ASSY.

NO.	PART NO.	PART NAME	QTY.	REMARKS
2	16551ZE3000	ARM, GOVERNOR	1	
3	16555ZE3000	ROD, GOVERNOR	1	
4	16561ZE3000	SPRING, GOVERNOR	1	
5	16562ZE3000	SPRING, THROTTLE RETURN	1	
6	16570ZE3W20	CONTROL ASSY. (REMOTE)	1	..... INCLUDES ITEMS W/*
10*	16571ZE3W00	LEVER, CONTROL	1	
11*	16574ZE1000	SPRING, LEVER	1	
12*	16575ZE2W00	WASHER, CONTROL LEVER	1	
13*	16576891000	HOLDER, CABLE	1	
14*	16578ZE1000	SPACER, CONTROL LEVER	1	
15*	16581ZE3W00	BASE, CONTROL	1	
17*	16584883300	SPRING, CONTROL ADJUSTING	1	
18*	16592883310	SPRING, CABLE RETURN	1	
21	90013883000	BOLT, FLANGE (6X12) (CT200)	2	
22	90015ZE5010	BOLT, GOVERNOR ARM	1	
24*	90114SA0000	NUT, SELF-LOCK (6MM)	1	
27*	93500050320A	SCREW, PAN (5X32)	1	
28*	93500050160A	SCREW, PAN (5X16)	1	
29	9405006000	NUT, FLANGE (6MM)	1	

CRANKCASE COVER ASSY.

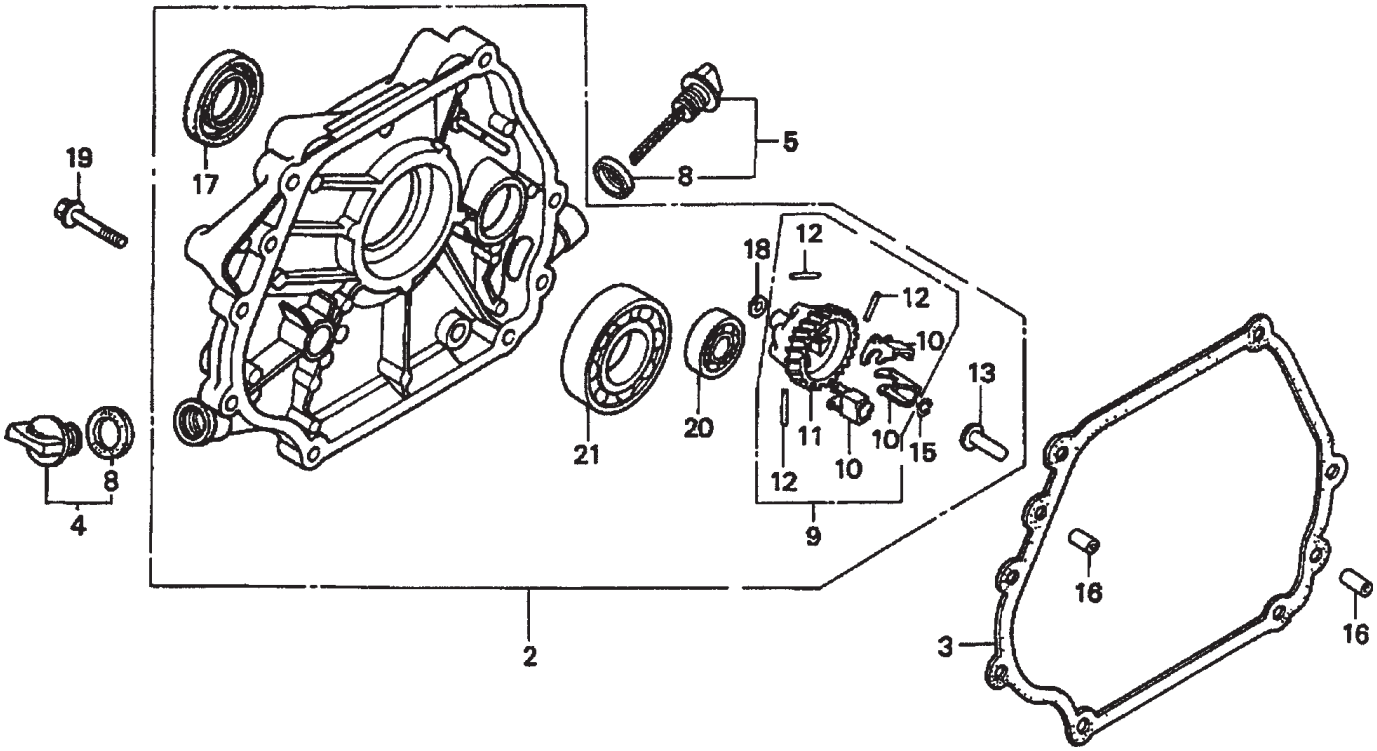

CRANKCASE COVER ASSY.

NO.	PART NO.	PART NAME	QTY.	REMARKS
2✖	11300ZE3602	COVER ASSY., CRANKCASE	1	S/N 3287256 AND BELOW INCLUDES ITEMS W/>
2✖	11300ZE3604	COVER ASSY., CRANKCASE	1	S/N 3287257 AND ABOVE INCLUDES ITEMS W/%
2◊	11300ZE3604	COVER ASSY., CRANKCASE	1	INCLUDES ITEMS W/$
3	11381ZE3801	GASKET, CASE COVER	1	
4	15600ZG4003	CAP ASSY., OIL FILLER	1	INCLUDES ITEM W/#
5	15600735003	CAP ASSY., OIL FILLER	1	INCLUDES ITEM W/*
8#*	15625ZE1003	GASKET, OIL FILLER CAP	2	
9	16510ZE3000	GOVERNOR ASSY.	1	INCLUDES ITEMS W/+
10>%$+	16511ZE8000	WEIGHT, GOVERNOR	3	
11>%$+	16512ZE3000	HOLDER, GOVERNOR WEIGHT	1	
12>%$+	16513ZE2000	PIN, GOVERNOR WEIGHT	3	
13✖>$%	16531ZE2000	SLIDER, GOVERNOR	1	S/N 3287256 AND BELOW
13✖>%$	16531Z0A000	SLIDER, GOVERNOR	1	S/N 3287257 AND ABOVE
13◊>%$	16531Z0A000	SLIDER, GOVERNOR	1	
15>%$	90602ZE1000	CLIP, GOVERNOR HOLDER	1	
16	90701HC4000	PIN, DOWEL (8X12)	2	
17>%$	91201ZE3004	OIL SEAL (35X52X8)	1	
18>%$	9410106800	WASHER, PLAIN (6MM)	1	
19	957010804000	BOLT, FLANGE (8X40)	7	
20>%$	961006202000	BEARING, RADIAL BALL (6202)	1	
21>%$	961006207000	BEARING, RADIAL BALL (6207)	1	

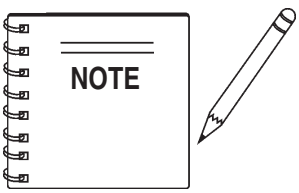

✖ GX390K1QWT2: Model S/N DECEMBER 2005 AND BELOW
◊ GX390U1QWT2: Model S/N JANUARY 2006 AND ABOVE

CRANKSHAFT ASSY.

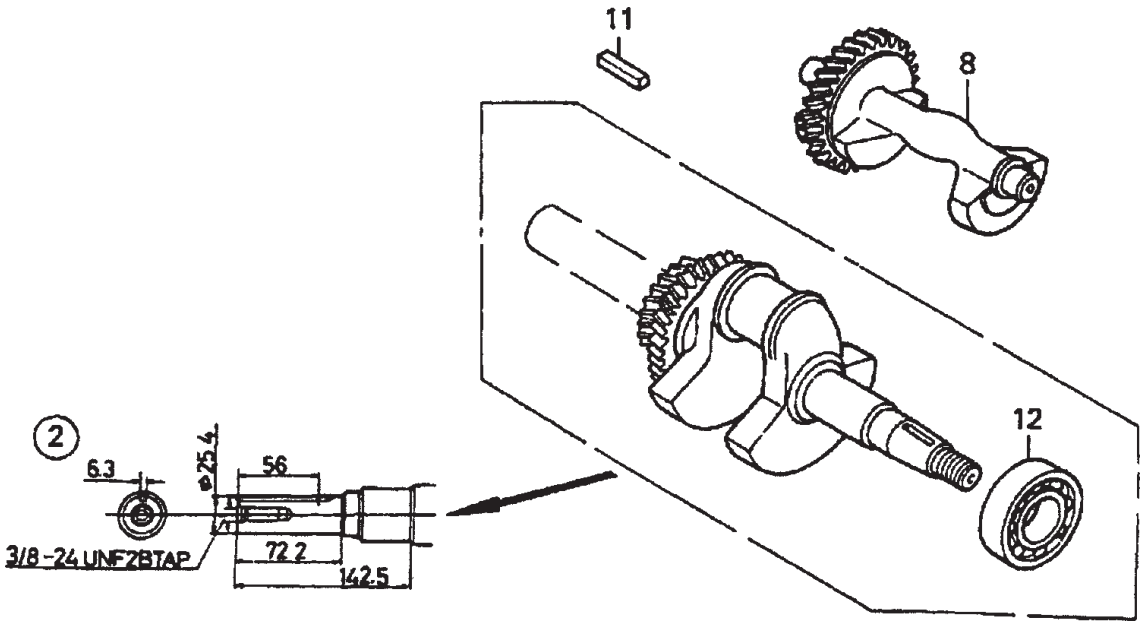

CRANKSHAFT ASSY.

NO.	PART NO.	PART NAME	QTY.	REMARKS
2✖	13310ZF6W10	CRANKSHAFT	1	INCLUDES ITEM W/*
2◊	13310ZF6W11	CRANKSHAFT	1	INCLUDES ITEM W/#
				S/N 1113739 AND BELOW
2◊	13310ZF6W12	CRANKSHAFT	1	INCLUDES ITEM W/+
				S/N 1113740 AND ABOVE
8	13351ZE3010	WEIGHT, BALANCER	1	
11	90745ZE2600	KEY(6.3X6.3X43)	1	
12✖*	91001ZF6003	BEARING, RADIAL BALL (6207S)	1	
12◊#	91001ZF6003	BEARING, RADIAL BALL (6207S)	1	S/N 1113739 AND BELOW
12◊+	91001ZF6013	BEARING, RADIAL BALL (6207SH)	1	S/N 1113740 AND ABOVE

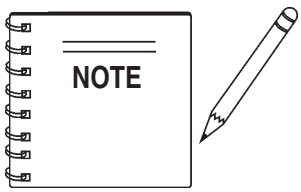

✖ GX390K1QWT2: Model S/N DECEMBER 2005 AND BELOW
◊ GX390U1QWT2: Model S/N JANUARY 2006 AND ABOVE

CYLINDER BARREL ASSY.

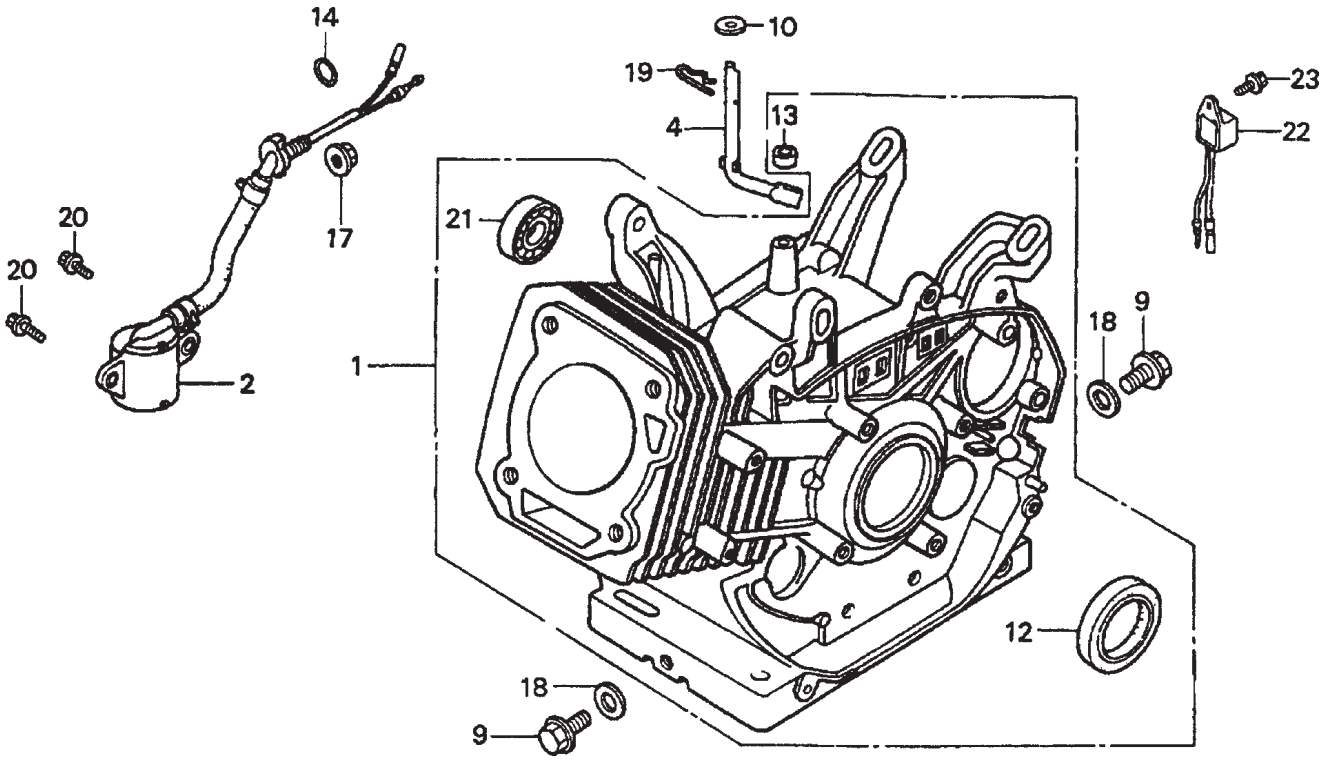

HONDA GX390K1QWT2/GX390U1QWT2 ENG. — CYLINDER BARREL ASSY.

CYLINDER BARREL ASSY.

NO.	PART NO.	PART NAME	QTY.	REMARKS
1✖	12000ZF6W13	CYLINDER ASSY. (ALERT)	1	INCLUDES ITEMS W/%
1◊	12000ZF6417	CYLINDER ASSY.	1	INCLUDES ITEMS W/#
2✖	15510ZE2043	SWITCH ASSY., OIL LEVEL	1	
2◊	15510ZE2043	SWITCH ASSY., OIL LEVEL	1	S/N 1412956 AND BELOW
2◊	15510ZE2053	SWITCH ASSY., OIL LEVEL	1	S/N 1412957 AND ABOVE
4	16541ZE3010	SHAFT, GOVERNOR ARM	1	
9	90131883000	BOLT, DRAIN PLUG 12X15	2	
10	90446KE1000	WASHER (8.2X17X0.8)	1	
12 %#	91201ZE3004	OIL SEAL (35X52X8)	1	
13	91203952771	OIL SEAL (8X14X5)	1	
14	91353671004	O-RING (14MM) (NOK)	1	
17	9405010000	NUT, FLANGE (10MM)	1	
18	9410912000	WASHER, DRAIN PLUG (12MM)	2	
19	9425110000	PIN, LOCK (10MM)	1	
20	957010601200	BOLT, FLANGE (6X12)	2	
21%#	961006202000	BEARING, RADIAL BALL (6202)	1	
22✖	34150ZH7003	ALERT UNIT, OIL	1	
22◊	34150ZH7003	ALERT UNIT, OIL	1	S/N 1419413 AND BELOW
22◊	34150ZH7013	ALERT UNIT, OIL	1	S/N 1419414 AND ABOVE
23	90013883000	BOLT, FLANGE (6X12) (CT200)	1	

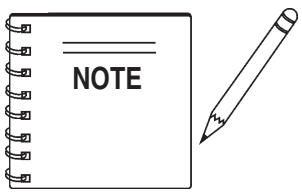

✖ GX390K1QWT2: Model S/N DECEMBER 2005 AND BELOW
◊ GX390U1QWT2: Model S/N JANUARY 2006 AND ABOVE

CYLINDER HEAD ASSY.

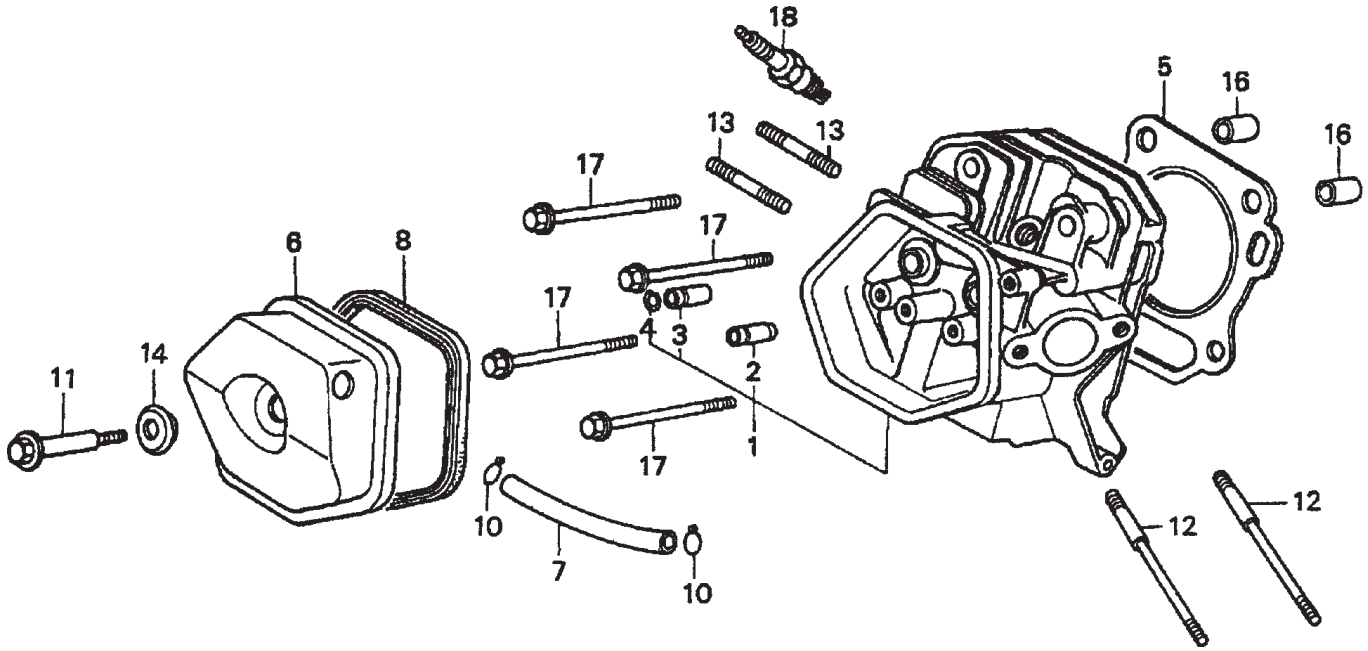

HONDA GX390K1QWT2/GX390U1QWT2 ENG. — CYLINDER HEAD ASSY.

CYLINDER HEAD ASSY.

NO.	PART NO.	PART NAME	QTY.	REMARKS
1✖	12200ZF6W01	CYLINDER HEAD	1	INCLUDES ITEMS W/*
1◊	12200ZF6406	CYLINDER HEAD	1	INCLUDES ITEMS W/%
2*%	12204ZE2306	GUIDE, VALVE (OS) (OPTIONAL)	1	
3*%	12205ZE2305	GUIDE, EX. VALVE (OS) (OPTIONAL)	1	
4*%	12216ZE2300	CLIP, VALVE GUIDE	1	
5	12251ZF6W00	GASKET, CYLINDER HEAD	1	
6	12310ZE3791	COVER, HEAD	1	
7	12315ZE3840	TUBE, BREATHER	1	
8	12391ZE2020	GASKET, CYLINDER HEAD COVER	1	
10	17316611000	CLIP, BREATHER TUBE	2	
11	90014ZE2000	BOLT, HEAD COVER	1	
12	90042ZE8000	BOLT, STUD (8X131.5)	2	
13	92900080320E	BOLT 2, STUD (8X32)	2	
14	90441ZE2010	WASHER, HEAD COVER	1	
16	9430112200	PIN A, DOWEL (12X20)	2	
17✖	957251008000	BOLT, FLANGE (10X80)	4	
17◊	957251008000	BOLT, FLANGE (10X80)	4	S/N 1411816 AND BELOW
17◊	957011008000	BOLT, FLANGE (10X80)	4	S/N 1411817 AND ABOVE
18	9807955846	SPARK PLUG (BPR5ES) (NGK) (OPT.)	1	
18	9807955855	SPARK PLUG (W16EPR-U) (DENSO)	1	
18	9807956846	SPARK PLUG (BPR6ES) (NGK)	1	
18	9807956855	SPARK PLUG (W20EPR-U) (DENSO)	1	

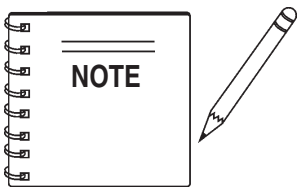

✖ GX390K1QWT2: Model S/N DECEMBER 2005 AND BELOW
◊ GX390U1QWT2: Model S/N JANUARY 2006 AND ABOVE

FAN COVER ASSY.

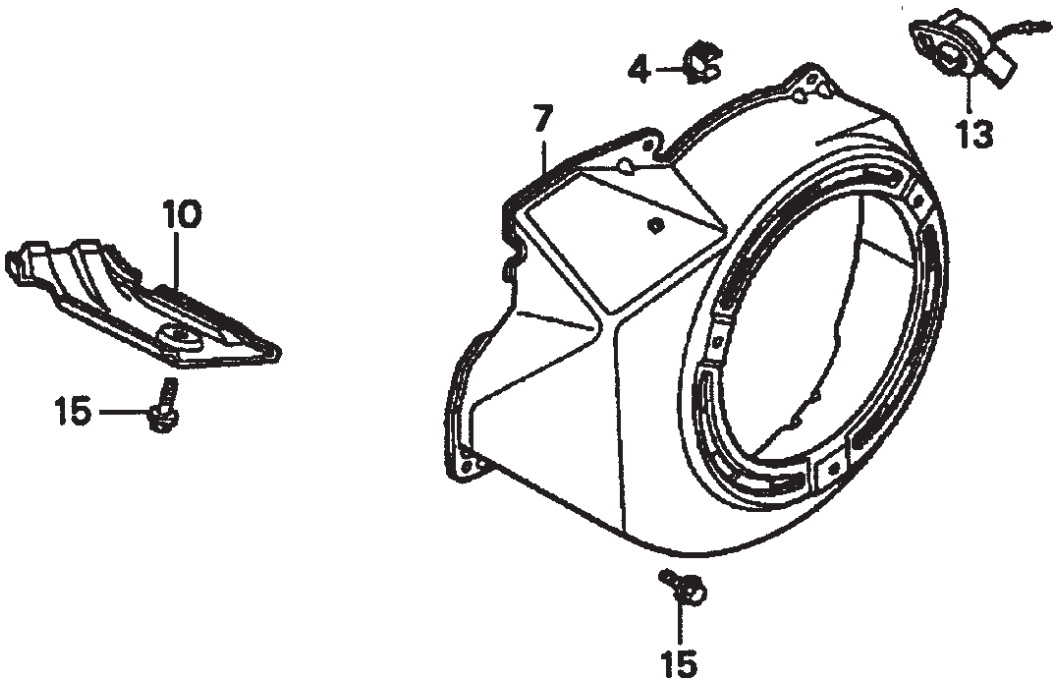

HONDA GX390K1QWT2/GX390U1QWT2 ENG. — FAN COVER ASSY.

FAN COVER ASSY.

NO.	PART NO.	PART NAME	QTY.	REMARKS
4	16731ZE2003	CLIP, TUBE	1	
7	19610ZE3010ZB	COVER, FAN *NH1* (BLACK)	1	
10	19631ZE3W00	SHROUD	1	
13✖	36100ZH7003	SWITCH ASSY., ENGINE STOP	1	
13◊	36100ZF6P81	SWITCH ASSY., ENGINE STOP	1	S/N 1412956 AND BELOW
13◊	36100ZF6P82	SWITCH ASSY., ENGINE STOP	1	S/N 1412957 AND ABOVE
15	90013883000	BOLT, FLANGE (6X12) (CT200)	6	

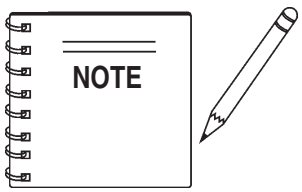

✖ GX390K1QWT2: Model S/N DECEMBER 2005 AND BELOW
◊ GX390U1QWT2: Model S/N JANUARY 2006 AND ABOVE

FLYWHEEL ASSY.

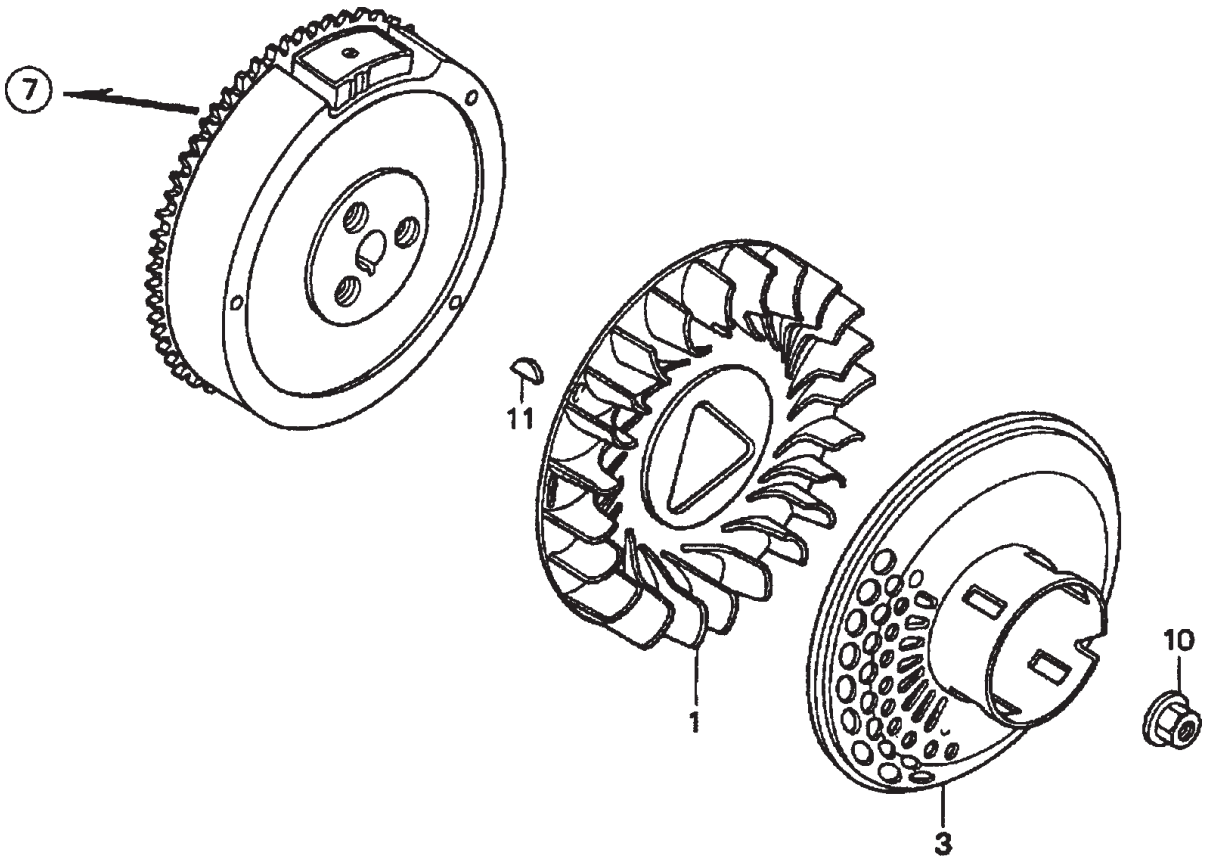

HONDA GX390K1QWT2/GX390U1QWT2 ENG. — FLYWHEEL ASSY.

FLYWHEEL ASSY.

NO.	PART NO.	PART NAME	QTY.	REMARKS
1	19511ZE3000	FAN, COOLING	1	
3	28450ZE3W11	PULLEY, STARTER (SCREEN GRID)	1	
7	31100ZE3701	FLYWHEEL	1	
10✖	90201ZE3V00	NUT, SPECIAL (16MM) (1)	1	
10◊	90201ZE3V00	NUT, SPECIAL (16MM) (1)	1	S/N 1317976 AND BELOW
10◊	90201ZE3790	NUT, SPECIAL (16MM) (1)	1	S/N 1317977 AND ABOVE
11	90741ZE2000	KEY, SPECIAL WOODRUFF (25X18)	1	

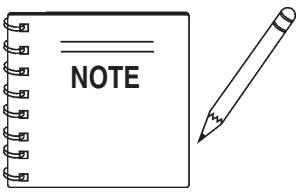

✖ GX390K1QWT2: Model S/N DECEMBER 2005 AND BELOW
◊ GX390U1QWT2: Model S/N JANUARY 2006 AND ABOVE

FUEL TANK ASSY.

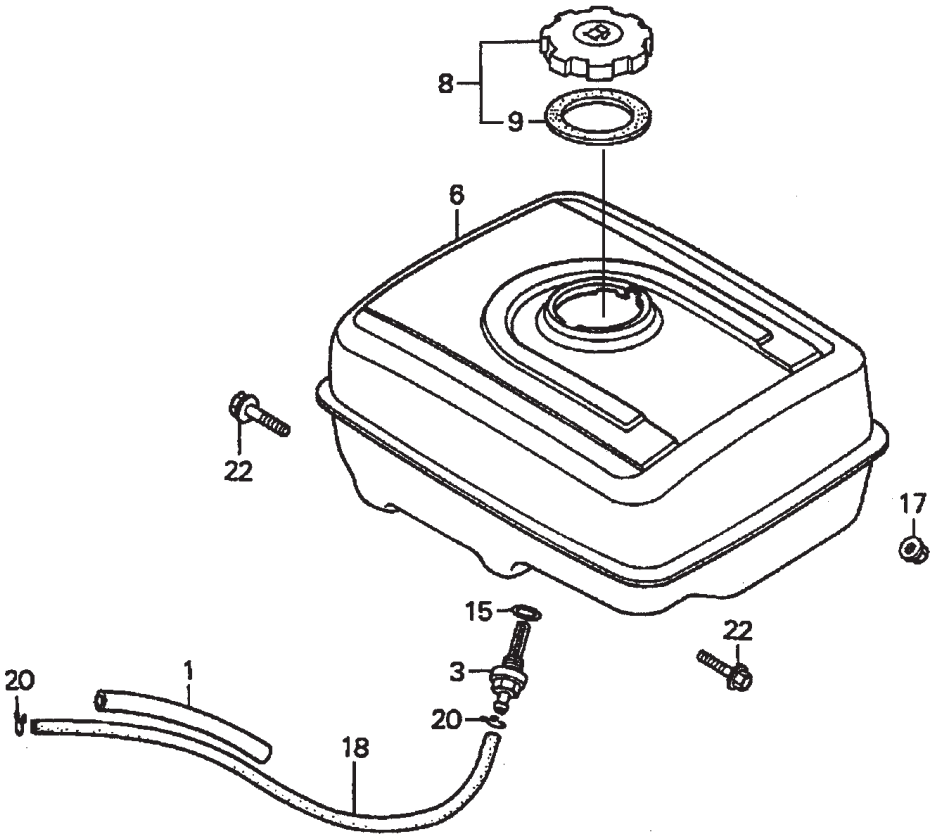

HONDA GX390K1QWT2/GX390U1QWT2 ENG. — FUEL TANK ASSY.

FUEL TANK ASSY.

NO.	PART NO.	PART NAME	QTY.	REMARKS
1	16854ZH8000	RUBBER, SUPPORTER (107MM)	1	
3	16955ZE1000	JOINT, FUEL TANK	1	
6✖	17510ZE3010ZB	TANK, FUEL *NH1*	1	
6◊	17510ZE3020ZB	TANK, FUEL *NH1*	1	S/N 1213085 AND BELOW
6◊	17510ZE3800ZA	TANK, FUEL *NH1*	1	S/N 1213086 THRU 1383799
6◊	17510ZE3801ZA	TANK, FUEL *NH1*	1	S/N 1383800 AND ABOVE
8✖	17620ZH7023	CAP, FUEL FILLER (BLACK)	1	INCLUDES ITEM W/*
8◊	17620Z0T305	CAP, FUEL FILLER (CHROME PLATED)	1	INCLUDES ITEM W/#
9*	17631ZH7003	GASKET, FUEL FILLER CAP	1	
9#	17631Z0T812	GASKET, FUEL FILLER CAP 39X62X3	1	
15	91353671004	O-RING (14MM) (NOK)	1	
17	9405008000	NUT, FLANGE (8MM)	2	
18✖	950014523540	BULK HOSE, FUEL (4.5X235)	1	REPLACES 950014500160M
18◊	950014523540	BULK HOSE, FUEL (4.5X235)	1	REPLACES 950014500160M S/N 1105013 AND BELOW
18◊	91424Z5L801	BULK HOSE, FUEL (4.5X235) (FKM)	1	S/N 1105014 AND ABOVE
20✖	9500202080	CLIP, TUBE (B8)	2	
20◊	9500202080	CLIP, TUBE (B8)	2	S/N 1105013 AND BELOW
20◊	950024080008	CLAMP, TUBE (D8)	2	S/N 1105014 AND ABOVE
22	957010802500	BOLT, FLANGE (8X25)	2	

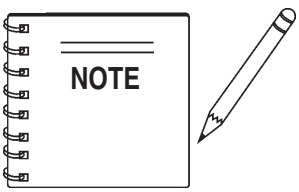

✖ GX390K1QWT2: Model S/N DECEMBER 2005 AND BELOW
◊ GX390U1QWT2: Model S/N JANUARY 2006 AND ABOVE

IGNITION COIL ASSY.

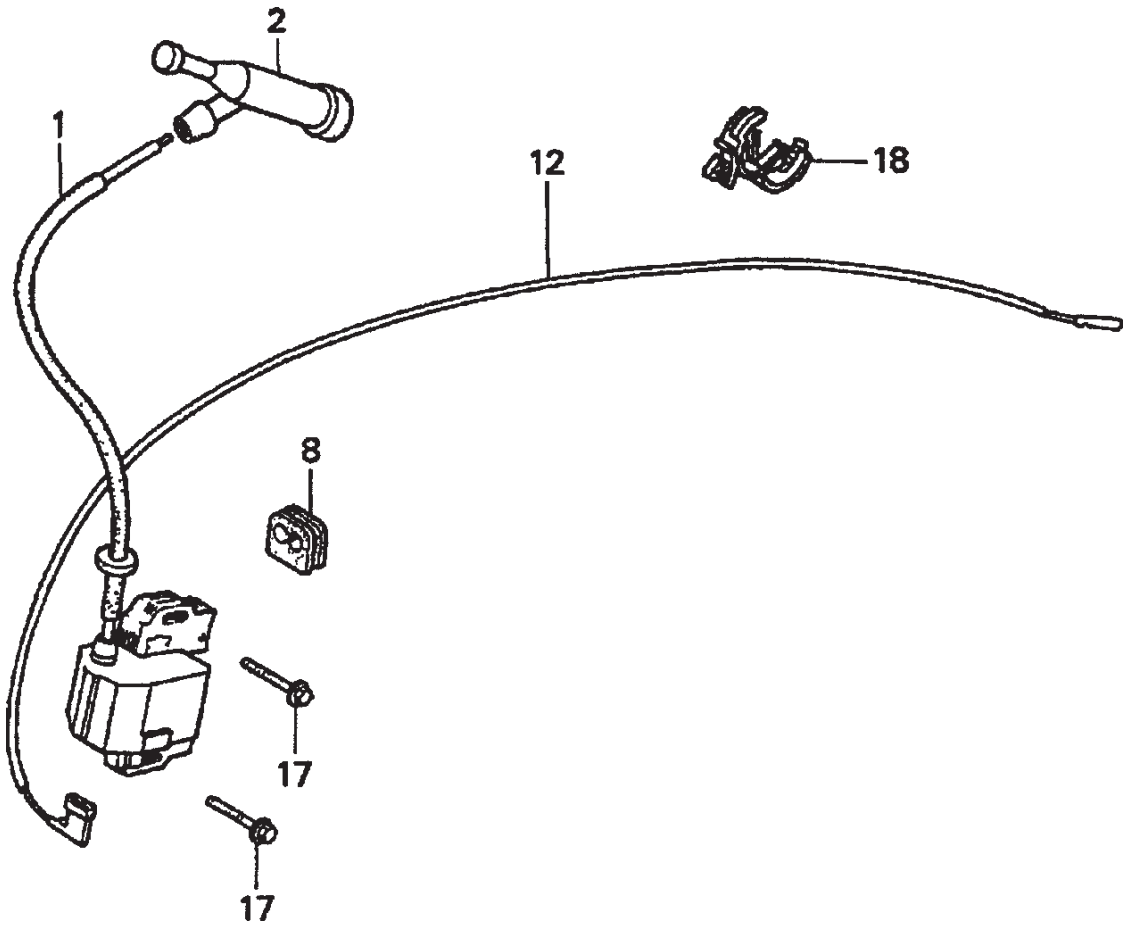

HONDA GX390K1QWT2/GX390U1QWT2 ENG. — IGNITION COIL ASSY.

IGNITION COIL ASSY.

NO.	PART NO.	PART NAME	QTY.	REMARKS
1✖	30500ZF6W02	COIL ASSY., IGNITION	1	
1◊	30500ZF6W02	COIL ASSY., IGNITION	1	S/N 1411816 AND BELOW
1◊	30500ZF6W03	COIL ASSY., IGNITION	1	S/N 1411817 AND ABOVE
2	30700ZE1013	CAP ASSY., NOISE SUPPRESSOR	1	
8	31512ZE2000	GROMMET, WIRE	1	
12	36101ZE2701	WIRE, STOP SWITCH (430MM)	1	
17	90015883000	BOLT, FLANGE (6X28)	2	
18	90684ZA0601	CLIP, WIRE HARNESS	1	

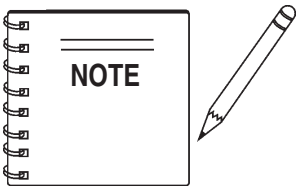

✖ GX390K1QWT2: Model S/N DECEMBER 2005 AND BELOW
◊ GX390U1QWT2: Model S/N JANUARY 2006 AND ABOVE

MUFFLER ASSY.

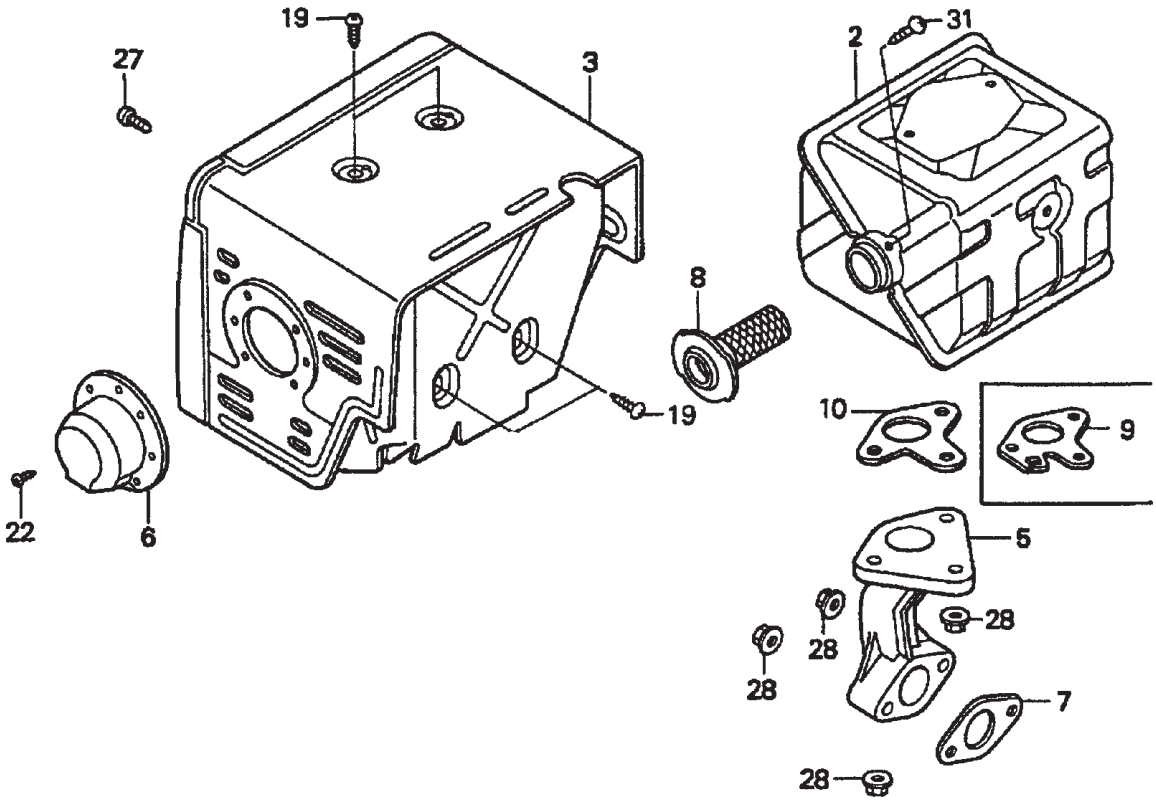

MUFFLER ASSY.

NO.	PART NO.	PART NAME	QTY.	REMARKS
2	18310ZE2W61	MUFFLER	1	
3	18320ZE2W61	PROTECTOR, MUFFLER	1	
5	18330ZE2W00	PIPE, EX.	1	
6✖	18331ZE3810	CAP, MUFFLER	1	
6◊	18331ZE3810	CAP, MUFFLER	1	S/N 1166160 AND BELOW
6◊	18331ZE3811	CAP, MUFFLER	1	S/N 1166161 AND ABOVE
7	18333ZF6W01	GASKET, EX. PIPE	1	
8	18355ZE2W00	ARRESTER, SPARK (OPTIONAL)	1	
9	18381ZE2W10	GASKET, MUFFLER (ARRESTER) (OPTIONAL)	1	
10	18381ZE2800	GASKET, MUFFLER	1	
19	90050ZE1000	SCREW, TAPPING (5X8)	4	
22	90055ZE1000	SCREW, TAPPING (4X6)	3	
27	90006ZE2000	SCREW, TAPPING (6X10)	1	
28	9405008000	NUT, FLANGE (8MM)	5	
31	90055ZE1000	SCREW, TAPPING (4X6)	1	

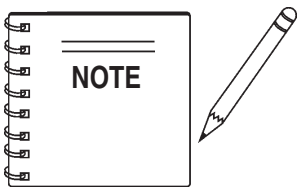

✖ GX390K1QWT2: Model S/N DECEMBER 2005 AND BELOW
◊ GX390U1QWT2: Model S/N JANUARY 2006 AND ABOVE

PISTON ASSY.

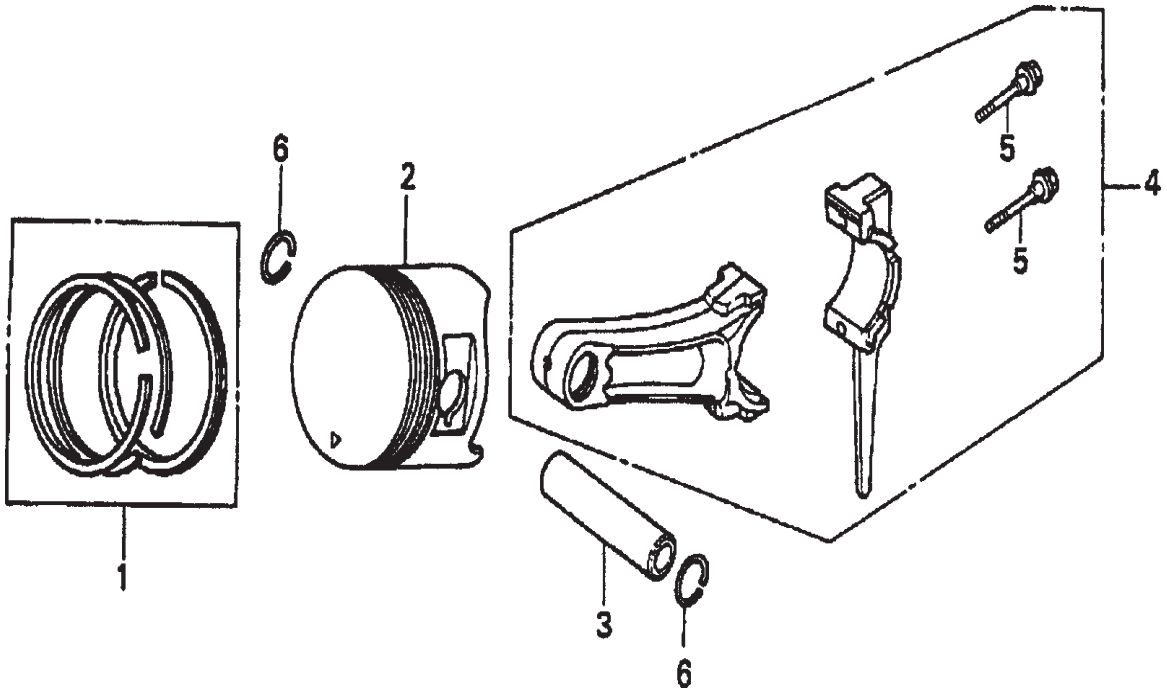

PISTON ASSY.

NO.	PART NO.	PART NAME	QTY.	REMARKS
1	13010ZF6005	RING SET, PISTON (STD)	1	
1	13011ZF6005	RING SET, PISTON (0.25)	1	
1	13012ZF6005	RING SET, PISTON (0.50)	1	
1	13013ZF6005	RING SET, PISTON (0.75)	1	
2	13101ZF6W00	PISTON (STD)	1	
2	13102ZF6W00	PISTON (0.25)	1	
2	13103ZF6W00	PISTON (0.50)	1	
2	13104ZF6W00	PISTON (0.75)	1	
3	13111ZF6W00	PIN, PISTON	1	
4	13200ZE3020	ROD ASSY., CONNECTING (STD)	1	..... INCLUDES ITEM W/*
4	13200ZE3315	ROD ASSY., CONNECTING (0.25 UNDERSIZE)	1	
5*	90001ZE8000	BOLT, CONNECTING ROD	2	
6	90601ZE3000	CLIP, PISTON PIN (20MM)	2	

RECOIL STARTER ASSY.

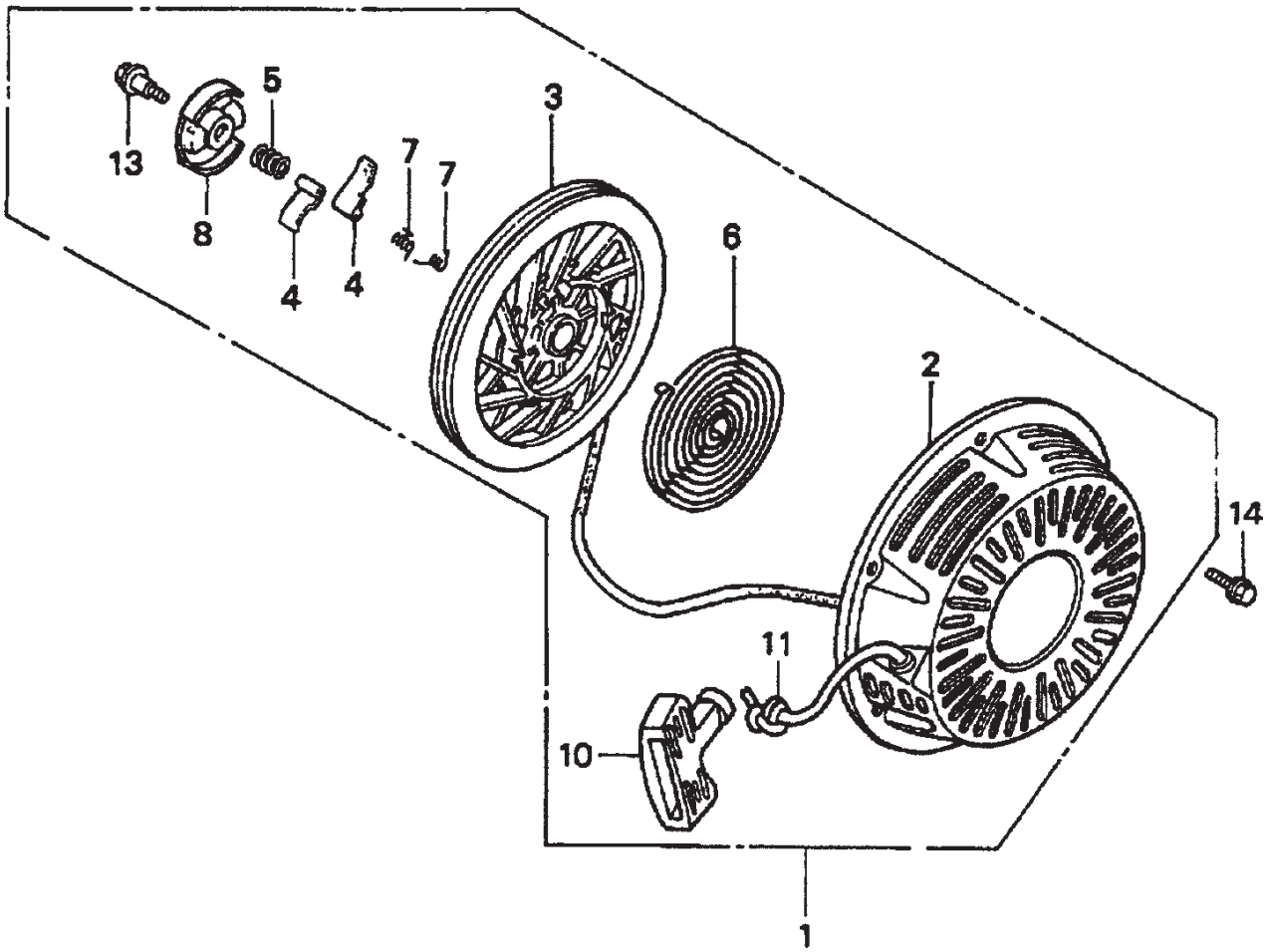

HONDA GX390K1QWT2/GX390U1QWT2 ENG. — RECOIL STATER ASSY.

RECOIL STARTER ASSY.

NO.	PART NO.	PART NAME	QTY.	REMARKS
1	28400ZE3W01ZB	STARTER ASSY., RECOIL *NH1* (BLACK)	1	INCLUDES ITEMS W/*
2*	28410ZE3W01ZB	CASE, RECOIL STARTER *NH1* (BLACK)	1	
3*	28421ZE3W01	PULLEY, RECOIL STARTER	1	
4*	28422ZE2W01	RATCHET, STARTER	2	
5*	28441ZE2W01	SPRING, FRICTION	1	
6*	28442ZE2W01	SPRING, STARTER RETURN	1	
7*	28443ZE2W01	SPRING, RATCHET	2	
8*	28444ZE2W01	RETAINER, SPRING	1	
10*	28461ZE2W02	GRIP, STARTER	1	
11✖*	28462ZV7003	ROPE, RECOIL STARTER	1	
11◊*	28462ZE3W01	ROPE, RECOIL STARTER	1	
13*	90004ZE2W01	SCREW, CENTER	1	
14	90008ZE2003	BOLT, FLANGE (6X10)	3	

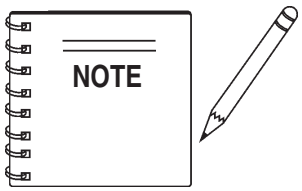

✖ GX390K1QWT2: Model S/N DECEMBER 2005 AND BELOW
◊ GX390U1QWT2: Model S/N JANUARY 2006 AND ABOVE

LABELS ASSY.

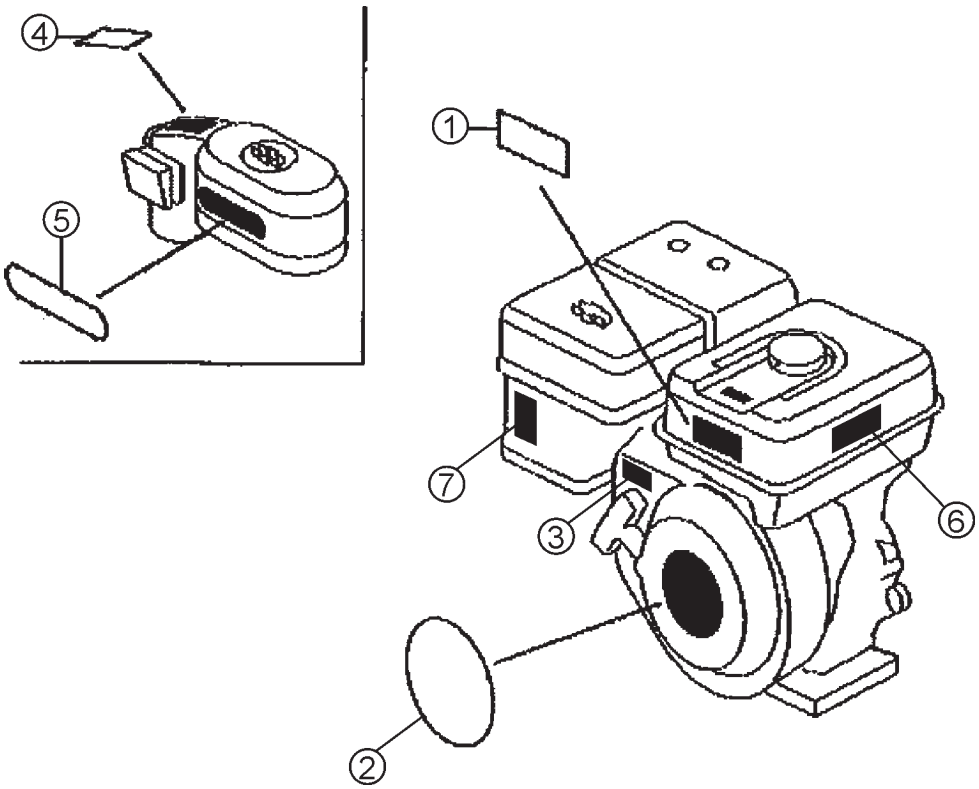

LABELS ASSY.

NO.	PART NO.	PART NAME	QTY.	REMARKS
1✖	87522ZH9010	LABEL, CAUTION(ENGLISH ETC.)	1	
1◊	87516ZH7000	MARK OPERATOR CAUTION	1	
1◊	87516ZH7810	MARK OPERATOR PICTOGRAPH (OPTION)	1	
2✖	87521ZF6W02	EMBLEM (GX390 HONDA 13.0)	1	
2◊	87521ZF6W03	EMBLEM (GX390 HONDA 13.0)	1	S/N 1398206 AND BELOW
2◊	87521ZF6W04	EMBLEM (GX390 HONDA 13.0)	1	S/N 1398207 AND ABOVE
3◊	87532ZH7000	MARK, THROTTLE INDICATION	1	
4	87534ZE1841	LABEL, AIR CLEANER CAUTION	1	
5◊	87535ZE1841	MARK, AIR CLEANER SALES POINT	1	
6✖	87532ZH8810	MARK, OIL ALERT (E)	1	
7✖	87528ZE2810	MARK, CHOKE (EXTERNAL)	1	

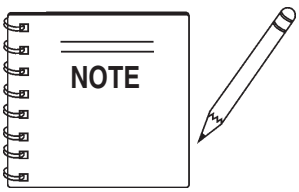

✖ GX390K1QWT2: Model S/N DECEMBER 2005 AND BELOW
◊ GX390U1QWT2: Model S/N JANUARY 2006 AND ABOVE

PAYMENT TERMS

Terms of payment for parts are net 30 days.

FREIGHT POLICY

All parts orders will be shipped collect or prepaid with the charges added to the invoice. All shipments are F.O.B. point of origin. Multiquip's responsibility ceases when a signed manifest has been obtained from the carrier, and any claim for shortage or damage must be settled between the consignee and the carrier.

MINIMUM ORDER

The minimum charge for orders from Multiquip is $15.00 net. Customers will be asked for instructions regarding handling of orders not meeting this requirement.

RETURNED GOODS POLICY

Return shipments will be accepted and credit will be allowed, subject to the following provisions:

1. A Returned Material Authorization must be approved by Multiquip prior to shipment.
2. To obtain a Return Material Authorization, a list must be provided to Multiquip Parts Sales that defines item numbers, quantities, and descriptions of the items to be returned.
   a. The parts numbers and descriptions must match the current parts price list.
   b. The list must be typed or computer generated.
   c. The list must state the reason(s) for the return.
   d. The list must reference the sales order(s) or invoice(s) under which the items were originally purchased.
   e. The list must include the name and phone number of the person requesting the RMA.
3. A copy of the Return Material Authorization must accompany the return shipment.
4. Freight is at the sender's expense. All parts must be returned freight prepaid to Multiquip's designated receiving point.
5. Parts must be in new and resalable condition, in the original Multiquip package (if any), and with Multiquip part numbers clearly marked.
6. The following items are not returnable:
   a. Obsolete parts. (If an item is in the price book and shows as being replaced by another item, it is obsolete.)
   b. Any parts with a limited shelf life (such as gaskets, seals, "O" rings, and other rubber parts) that were purchased more than six months prior to the return date.
   c. Any line item with an extended dealer net price of less than $5.00.
   d. Special order items.
   e. Electrical components.
   f. Paint, chemicals, and lubricants.
   g. Decals and paper products.
   h. Items purchased in kits.
7. The sender will be notified of any material received that is not acceptable.
8. Such material will be held for five working days from notification, pending instructions. If a reply is not received within five days, the material will be returned to the sender at his expense.
9. Credit on returned parts will be issued at dealer net price at time of the original purchase, less a 15% restocking charge.
10. In cases where an item is accepted, for which the original purchase document can not be determined, the price will be based on the list price that was effective twelve months prior to the RMA date.
11. Credit issued will be applied to future purchases only.

PRICING AND REBATES

Prices are subject to change without prior notice. Price changes are effective on a specific date and all orders received on or after that date will be billed at the revised price. Rebates for price declines and added charges for price increases will not be made for stock on hand at the time of any price change.

Multiquip reserves the right to quote and sell direct to Government agencies, and to Original Equipment Manufacturer accounts who use our products as integral parts of their own products.

SPECIAL EXPEDITING SERVICE

A $35.00 surcharge will be added to the invoice for special handling including bus shipments, insured parcel post or in cases where Multiquip must personally deliver the parts to the carrier.

LIMITATIONS OF SELLER'S LIABILITY

Multiquip shall not be liable hereunder for damages in excess of the purchase price of the item with respect to which damages are claimed, and in no event shall Multiquip be liable for loss of profit or good will or for any other special, consequential or incidental damages.

LIMITATION OF WARRANTIES

No warranties, express or implied, are made in connection with the sale of parts or trade accessories nor as to any engine not manufactured by Multiquip. Such warranties made in connection with the sale of new, complete units are made exclusively by a statement of warranty packaged with such units, and Multiquip neither assumes nor authorizes any person to assume for it any other obligation or liability whatever in connection with the sale of its products. Apart from such written statement of warranty, there are no warranties, express, implied or statutory, which extend beyond the description of the products on the face hereof.

Effective: February 22, 2006

NOTE PAGE

OPERATION AND PARTS MANUAL

HERE'S HOW TO GET HELP

PLEASE HAVE THE MODEL AND SERIAL NUMBER *ON-HAND* WHEN CALLING

UNITED STATES

Multiquip Corporate Office
18910 Wilmington Ave. Tel. (800) 421-1244
Carson, CA 90746 Fax (800) 537-3927
Contact: mq@multiquip.com

Mayco Parts
800-306-2926 Fax: 800-672-7877
310-537-3700 Fax: 310-637-3284

Service Department
800-421-1244 Fax: 310-537-4259
310-537-3700

MQ Parts Department
800-427-1244 Fax: 800-672-7877
310-537-3700 Fax: 310-637-3284

Warranty Department
800-421-1244, Ext. 279 Fax: 310-537-1173
310-537-3700, Ext. 279

Technial Assistance
800-478-1244 Fax: 310-631-5032

MEXICO

MQ Cipsa
Carr. Fed. Mexico-Puebla KM 126.5 Tel: (52) 222-225-9900
Momoxpan, Cholula, Puebla 72760 Mexico Fax: (52) 222-285-0420
Contact: pmastretta@cipsa.com.mx

CANADA

Multiquip
4110 Industriel Boul. Tel: (450) 625-2244
Laval, Quebec, Canada H7L 6V3 Fax: (450) 625-8664
Contact: jmartin@multiquip.com

UNITED KINGDOM

Multiquip (UK) Limited Head Office
Hanover Mill, Fitzroy Street, Tel: 0161 339 2223
Ashton-under-Lyne, Fax: 0161 339 3226
Lancashire OL7 0TL
Contact: sales@multiquip.co.uk

BRAZIL

Multiquip
Av. Evandro Lins e Silva, 840 - grupo 505 Tel: 011-55-21-3433-9055
Barra de Tijuca - Rio de Janeiro Fax: 011-55-21-3433-9055
Contact: cnavarro@multiquip.com.br, srentes@multiquip.com.br

© COPYRIGHT 2008, MULTIQUIP INC.

Multiquip Inc, the MQ logo and the Diamond Back logo are registered trademarks of Multiquip Inc. and may not be used, reproduced, or altered without written permission. All other trademarks are the property of their respective owners and used with permission.

This manual MUST accompany the equipment at all times. This manual is considered a permanent part of the equipment and should remain with the unit if resold.

The information and specifications included in this publication were in effect at the time of approval for printing. Illustrations, descriptions, references and technical data contained in this manual are for guidance only and may not be considered as binding. Multiquip Inc. reserves the right to discontinue or change specifications, design or the information published in this publication at any time without notice and without incurring any obligations.

Your Local Dealer is:

MULTIQUIP

HITACHI

ZAXIS 160LC-3

- **Engine Net Power:** 121 hp (90.2 kW) @ 2,200 rpm
- **Operating Weight:** 37,908 lb. (17 195 kg)
- **Backhoe Bucket:** 0.81 cu. yd. (0.62 m^3)

ZAXIS 160LC-3 SPECIFICATIONS

Engine

Manufacturer and Model	Isuzu AI-4JJ1X certified to EPA Tier-3 emissions
Net Power (ISO9249)	121 hp (90.2 kW) @ 2,200 rpm
Cylinders	4
Displacement	183 cu. in. (2.99 L)
Aspiration	turbocharged, air-to-air charge air cooler
Off-Level Capacity	70% (35 deg.)

Powertrain

Maximum Travel Speed

Low	2.1 mph (3.4 km/h)
High	3.3 mph (5.3 km/h)
Drawbar Pull	38,030 lb. (17 250 kg)

Hydraulics

Open center, load sensing; auxiliary hydraulic flow adjustable through monitor

Main Pumps	2 variable-displacement axial-piston pumps
Maximum Rated Flow	2 x 50.4 gpm (2 x 191 L/min.)
Pilot Pump	one gear
Maximum Rated Flow	8.87 gpm (33.6 L/min.)
Pressure Setting	570 psi (3930 kPa)

System Operating Pressure

Implement Circuits	4,980 psi (34 336 kPa)
Travel Circuits	4,980 psi (34 336 kPa)
Swing Circuits	4,250 psi (29 300 kPa)
Controls	pilot levers, short stroke, low effort; hydraulic pilot controls with shutoff lever

Cylinders

Heat-treated, chrome-plated, polished cylinder rods; hardened-steel (replaceable bushings) pivot pins

	Bore	Rod Diameter	Stroke
Boom (2)	4.33 in. (110 mm)	3.15 in. (80 mm)	43.70 in. (1110 mm)
Arm (1)	4.72 in. (120 mm)	3.54 in. (90 mm)	53.74 in. (1365 mm)
Bucket (1)	4.13 in. (105 mm)	2.95 in. (75 mm)	36.81 in. (935 mm)

Electrical

Batteries	2 x 12 volt
Alternator	50 amp
Lights	halogen (one mounted on boom, one mounted on frame)

Undercarriage

Carrier Rollers (per side)	2
Track Rollers (per side)	7
Shoes (per side)	43

Track

Adjustment	hydraulic
Chain	sealed and lubricated

Swing Mechanism

Swing Speed	13.3 rpm
Swing Torque	32,353 lb.-ft. (44 000 Nm)

Ground Pressure

Triple Semi-Grouser Shoes

24 in. (600 mm)	5.83 psi (40.2 kPa)
28 in. (700 mm)	5.11 psi (35.2 kPa)

Serviceability

Refill Capacities

Fuel Tank .....85 gal. (320.0 L)
Cooling System .....23 qt. (22.0 L)
Engine Oil with Filter .....16 qt. (15.0 L)
Hydraulic Tank.....33 gal. (125.0 L)
Hydraulic System .....52.0 gal. (196.8 L)

Gearbox

Propel (each) .....5.0 qt. (4.7 L)
Swing .....6.0 qt. (5.7 L)

Operating Weights

With Full Fuel Tank; 175-lb. (79 kg) Operator; 36-in. (914 mm), 0.81-cu.-yd. (0.62 m^3), 1,373-lb. (623 kg) Heavy-Duty Bucket; 10-ft. 2-in. (3.10 m) Arm; 7,275-lb. (3300 kg) Counterweight; 12-ft. 10-in. (3.92 m) Undercarriage Length; and Triple Semi-Grouser Shoes

24 in. (600 mm).....37,436 lb. (16 981 kg)
28 in. (700 mm).....37,908 lb. (17 195 kg)

Optional Components

Undercarriage with Triple Semi-Grouser Shoes

24 in. (600 mm).....13,911 lb. (6316 kg)
28 in. (700 mm).....14,383 lb. (6530 kg)

Upperstructure with Full Fuel Tank (less front attachments and 7,275-lb. [3300 kg] counterweight).....8,997 lb. (4081 kg)
One-Piece Boom (with arm cylinder) .....2,864 lb. (1300 kg)

Arm with Bucket Cylinder and Linkage

8 ft. 6 in. (2.60 m) .....1,735 lb. (788 kg)
10 ft. 2 in. (3.10 m) .....1,925 lb. (874 kg)

Boom Lift Cylinders (2) Total Weight.....675 lb. (306 kg)
36-in. (914 mm), 0.81-cu.-yd. (0.62 m^3)
Heavy-Duty Bucket .....1,373 lb. (623 kg)
Counterweight (standard) .....7,275 lb. (3300 kg)

Lifting Capacities

Boldface italic type indicates hydraulic-limited capacities; lightface type indicates stability-limited capacities, in lb. (kg). Ratings are at bucket lift hook, using standard counterweight, situated on firm, level, uniform supporting surface. Figures do not exceed 87 percent of hydraulic capacity or 75 percent of weight needed to tip machine.

Load Point	5 ft. (1.52 m)		10 ft. (3.05 m)		15 ft. (4.57 m)		20 ft. (6.10 m)		25 ft. (7.62 m)	
Height	Over Front	Over Side	Over Front	Over Side	Over Front	Over Side	Over Front	Over Side	Over Front	Over Side
With 8-ft. 6-in. (2.60 m) arm, 0.78-cu.-yd. (0.60 m^3) bucket, and 24-in. (600 mm) triple semi-grouser shoes										
20 ft. (6.10 m)							***5,470 (2481)***	***5,470 (2481)***		
15 ft. (4.57 m)							***6,568 (2979)***	6,411 (2908)		
10 ft. (3.05 m)					***9,265 (4203)***	***9,265 (4203)***	***7,684 (3485)***	6,107 (2770)	***5,803 (2632)***	4,073 (1847)
5 ft. (1.52 m)					***12,523 (5680)***	8,920 (4046)	***9,160 (4155)***	5,733 (2600)	6,443 (2922)	3,922 (1779)
Ground Line					14,137 (6412)	8,388 (3805)	8,959 (4064)	5,438 (2467)	6,300 (2858)	3,789 (1719)
–5 ft. (–1.52 m)			***13,758 (6241)***	***13,758 (6241)***	13,949 (6327)	8,226 (3731)	8,810 (3996)	5,302 (2405)		
–10 ft. (–3.05 m)	***18,000 (8165)***	***18,000 (8165)***	***16,758 (7601)***	16,167 (7333)	14,052 (6374)	8,315 (3772)	8,875 (4026)	5,361 (2432)		
–15 ft. (–4.57 m)			***15,450 (7008)***	***15,450 (7008)***	***10,825 (4910)***	8,315 (3772)				
With 8-ft. 6-in. (2.60 m) arm, 0.78-cu.-yd. (0.60 m^3) bucket, and 28-in. (700 mm) triple semi-grouser shoes										
20 ft. (6.10 m)							***5,470 (2481)***	***5,470 (2481)***		
15 ft. (4.57 m)							***6,568 (2979)***	6,507 (2952)		
10 ft. (3.05 m)					***9,265 (4203)***	***9,265 (4203)***	***7,684 (3485)***	6,202 (2813)	***5,803 (2632)***	4,146 (1881)
5 ft. (1.52 m)					***12,523 (5680)***	9,057 (4108)	***9,160 (4155)***	5,829 (2644)	6,552 (2972)	3,995 (1812)
Ground Line					14,356 (6512)	8,525 (3867)	9,105 (4130)	5,534 (2510)	6,410 (2908)	3,862 (1752)
–5 ft. (–1.52 m)			***13,758 (6241)***	***13,758 (6241)***	14,169 (6427)	8,363 (3793)	8,956 (4062)	5,398 (2448)		
–10 ft. (–3.05 m)	***18,000 (8165)***	***18,000 (8165)***	***16,798 (7619)***	16,411 (7444)	***14,174 (6429)***	8,452 (3834)	9,021 (4092)	5,457 (2475)		
–15 ft. (–4.57 m)			***15,450 (7008)***	***15,450 (7008)***	***10,825 (4910)***	8,832 (4006)				

Lifting Capacities

Boldface italic type indicates hydraulic-limited capacities; lightface type indicates stability-limited capacities, in lb. (kg). Ratings are at bucket lift hook, using standard counterweight, situated on firm, level, uniform supporting surface. Figures do not exceed 87 percent of hydraulic capacity or 75 percent of weight needed to tip machine.

Load Point	5 ft. (1.52 m)		10 ft. (3.05 m)		15 ft. (4.57 m)		20 ft. (6.10 m)		25 ft. (7.62 m)	
Height	Over Front	Over Side	Over Front	Over Side	Over Front	Over Side	Over Front	Over Side	Over Front	Over Side
With 10-ft. 2-in. (3.10 m) arm, 0.52-cu.-yd. (0.40 m³) bucket, and 24-in. (600 mm) triple semi-grouser shoes										
20 ft. (6.10 m)							***5,363 (2433)***	***5,363 (2433)***		
15 ft. (4.57 m)							***5,699 (2585)***	***5,699 (2585)***	***4,315 (1957)***	4,217 (1913)
10 ft. (3.05 m)					***7,960 (3611)***	***7,960 (3611)***	6,893 (3127)	6,180 (2803)	***6,172 (2800)***	4,100 (1860)
5 ft. (1.52 m)					***11,372 (5158)***	9,078 (4118)	***8,485 (3849)***	5,768 (2616)	6,441 (2922)	3,912 (1774)
Ground Line			***9,772 (4433)***	***9,772 (4433)***	***13,961 (6333)***	8,410 (3815)	8,948 (4059)	5,418 (2458)	6,254 (2837)	3,739 (1696)
–5 ft. (–1.52 m)	***7,754 (3517)***	***7,754 (3517)***	***14,078 (6386)***	***14,078 (6386)***	13,860 (6287)	8,133 (3689)	8,732 (3961)	5,222 (2369)	6,158 (2793)	3,649 (1655)
–10 ft. (–3.05 m)	***14,934 (6774)***	***14,934 (6774)***	***18,032 (8179)***	15,836 (7183)	13,869 (6291)	8,141 (3693)	8,719 (3955)	5,210 (2363)		
–15 ft. (–4.57 m)			***17,678 (8019)***	16,342 (7413)	***12,257 (5560)***	8,409 (3814)				
With 10-ft. 2-in. (3.10 m) arm, 0.52-cu.-yd. (0.40 m³) bucket, and 28-in. (700 mm) triple semi-grouser shoes										
20 ft. (6.10 m)							***5,363 (2433)***	***5,363 (2433)***		
15 ft. (4.57 m)							***5,699 (2585)***	***5,699 (2585)***	***4,315 (1957)***	4,290 (1946)
10 ft. (3.05 m)					***7,960 (3611)***	***7,960 (3611)***	***6,893 (3127)***	6,276 (2847)	***6,172 (2800)***	4,174 (1893)
5 ft. (1.52 m)					***11,372 (5158)***	9,216 (4180)	***8,485 (3849)***	5,864 (2660)	6,550 (2971)	3,985 (1808)
Ground Line			***9,772 (4433)***	***9,772 (4433)***	***11,372 (5158)***	8,547 (3877)	9,094 (4125)	5,513 (2501)	6,364 (2887)	3,812 (1729)
–5 ft. (–1.52 m)	***7,754 (3517)***	***7,754 (3517)***	***14,078 (6386)***	***14,078 (6386)***	13,961 (6333)	8,271 (3752)	8,878 (4027)	5,317 (2412)	6,268 (2843)	3,723 (1689)
–10 ft. (–3.05 m)	***14,934 (6774)***	***14,934 (6774)***	***18,032 (8179)***	16,080 (7294)	14,079 (6386)	8,279 (3755)	8,865 (4021)	5,305 (2406)		
–15 ft. (–4.57 m)			***17,678 (8019)***	16,586 (7523)	***12,257 (5560)***	8,547 (3877)				

Buckets

A full line of buckets is offered to meet a wide variety of applications. Digging forces are with power boost. Replaceable cutting edges are available through Hitachi parts. Optional side cutters add 6 inches (150 mm) to bucket widths. Capacities are SAE heaped ratings.

Type Bucket	Bucket Width		Bucket Capacity*		Weight		Bucket Dig Force		Arm Dig Force 8 ft. 6 in. (2.60 m)		Arm Dig Force 10 ft. 2 in. (3.10 m)		Bucket Tip Radius		No. Teeth
	in.	mm	cu. yd.	m³	lb.	kg	lb.	kN	lb.	kN	lb.	kN	in.	mm	
General-Purpose	24	610	0.54	0.41	1,081	491	20,920	93.1	18,804	83.6	16,808	74.8	57.61	1463	4
High Capacity	30	760	0.72	0.55	1,253	569	20,920	93.1	18,804	83.6	16,808	74.8	57.61	1463	4
	36	915	0.91	0.70	1,443	655	20,920	93.1	18,804	83.6	16,808	74.8	57.61	1463	5
	42	1065	1.11	0.85	1,615	733	20,920	93.1	18,804	83.6	16,808	74.8	57.61	1463	5
Heavy Duty	24	610	0.48	0.37	1,086	493	22,697	101.0	19,352	86.1	17,243	76.7	53.10	1349	4
	30	760	0.65	0.50	1,221	554	22,697	101.0	19,352	86.1	17,243	76.7	53.10	1349	4
	36	915	0.81	0.62	1,373	623	22,697	101.0	19,352	86.1	17,243	76.7	53.10	1349	5
	42	1065	0.99	0.76	1,508	685	22,697	101.0	19,352	86.1	17,243	76.7	53.10	1349	5
Ditching	60	1524	0.83	0.63	1,066	484	32,741	145.6	21,630	96.2	19,020	84.6	36.81	935	0

Bucket Selection Guide*

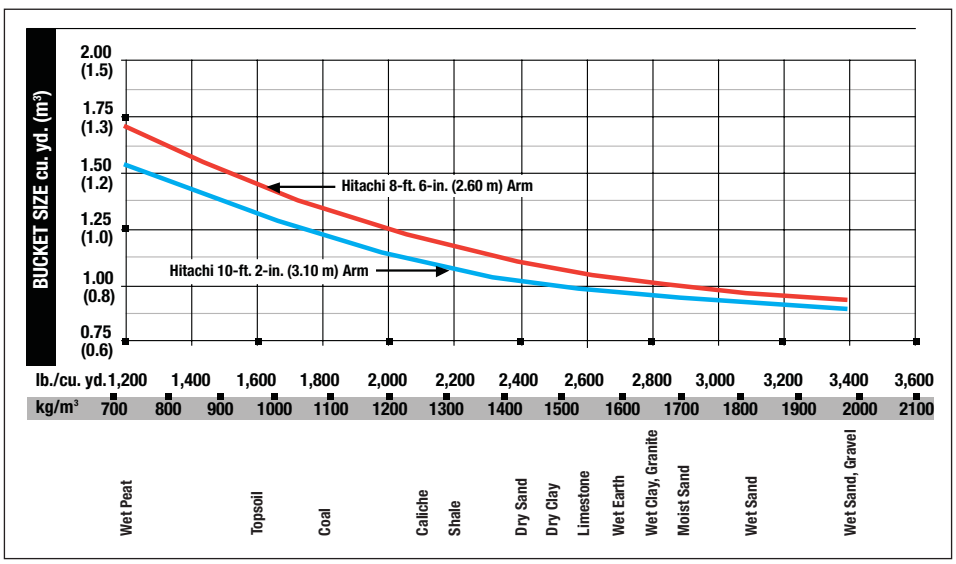

*Contact your Hitachi dealer for optimum bucket and attachment selections. These recommendations are for general conditions and average use. Does not include optional equipment such as thumbs or couplers. Larger buckets may be possible when using light materials, for flat and level operations, less compacted materials, and volume loading applications such as mass excavation applications in ideal conditions. Smaller buckets are recommended for adverse conditions such as off-level applications, rocks, and uneven surfaces. Bucket capacity indicated is SAE heaped.

Dimensions

A 8-ft. 6-in. (2.60 m) arm .....9 ft. 5 in. (2.87 m)
10-ft. 2-in. (3.01 m) arm .....10 ft. 2 in. (3.11 m)
B 8-ft. 6-in. (2.60 m) arm .....28 ft. 1 in. (8.55 m)
10-ft. 2-in. (3.01 m) arm .....28 ft. 2 in. (8.58 m)

ZAXIS 160LC-3

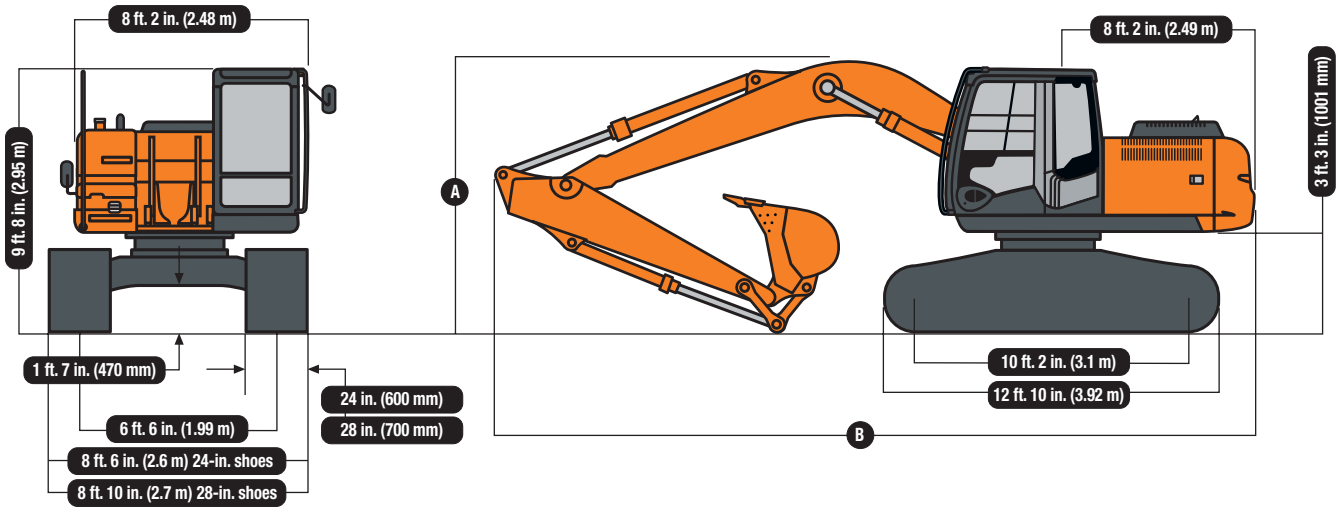

Operating Information

	Arm Length 8 ft. 6 in. (2.60 m)	*Arm Length 10 ft. 2 in. (3.10 m)*
Arm Force with 36-in. (914 mm), 0.81-cu.-yd. (0.62 m³) Heavy-Duty Bucket with Power Boost	19,352 lb. (86.1 kN)	17,243 lb. (76.7 kN)
Bucket Digging Force with 36-in. (914 mm), 0.81-cu.-yd. (0.62 m³) Heavy-Duty Bucket with Power Boost	22,697 lb. (101.0 kN)	22,697 lb. (101.0 kN)
Lifting Capacity Over Front at Ground Level 20-ft. (6.1 m) Reach with Power Boost	9,105 lb. (4134 kg)	9,094 lb. (4129 kg)
A Maximum Reach	29 ft. 1 in. (8.87 m)	30 ft. 7 in. (9.33 m)
A' Maximum Reach at Ground Level	28 ft. 7 in. (8.70 m)	30 ft. 1 in. (9.16 m)
B Maximum Digging Depth	19 ft. 7 in. (5.98 m)	21 ft. 4 in. (6.49 m)
B' Maximum Digging Depth at 8-ft. (2.44 m) Flat Bottom	18 ft. 10 in. (5.74 m)	20 ft. 7 in. (6.27 m)
C Maximum Cutting Height	29 ft. 2 in. (8.88 m)	29 ft. 11 in. (9.13 m)
D Maximum Dumping Height	20 ft. 3 in. (6.17 m)	21 ft. 0 in. (6.40 m)
E Minimum Swing Radius	9 ft. 7 in. (2.91 m)	9 ft. 7 in. (2.92 m)
F Maximum Vertical Wall	16 ft. 11 in. (5.16 m)	18 ft. 8 in. (5.69 m)
G Tail Swing Radius	8 ft. 2 in. (2.49 m)	8 ft. 2 in. (2.49 m)

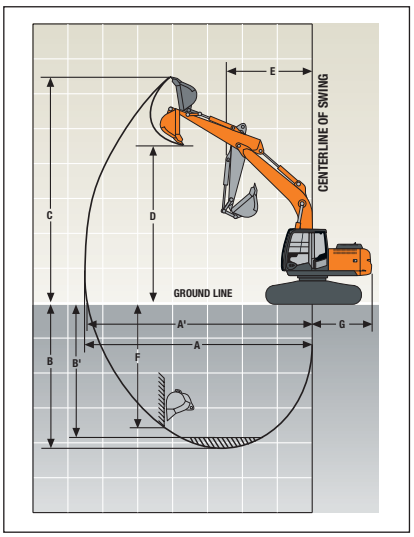

Equipment

Key ● Standard Equipment ▲ Optional or Special Equipment

Engine

- ● Certified to EPA Tier-3 emissions
- ● H/P mode control
- ● E mode control
- ● 50 A alternator
- ● Dry-type air filter with evacuator valve (with air filter restriction switch for monitor)
- ● Cartridge-type engine oil filter
- ● Cartridge-type fuel double filters
- ● Air cleaner double filters
- ● Radiator, oil cooler and intercooler with dust protective net
- ● Radiator reserve tank
- ● Fan guard
- ● Isolation-mounted engine
- ● Auto-idle system
- ● Fuel cooler
- ● Glow-plug start aid
- ● Engine oil drain coupler

Hydraulic System

- ● Reduced-drift valve for boom down, arm in
- ● Auxiliary hydraulic valve section
- ● Spring-applied, hydraulically released automatic swing brake
- ● Auxiliary hydraulic-flow adjustments through monitor
- ● Auto power lift
- ● 5,000-hour hydraulic-oil-change interval
- ● Hydraulic-oil-sampling valve
- ▲ Auxiliary hydraulic lines
- ▲ Auxiliary pilot and electric controls
- ▲ Hydraulic filter restriction indicator kit
- ▲ Load-lowering control device
- ▲ Single-pedal propel control
- ▲ Control pattern change valve

Undercarriage

- ● Planetary drive with axial piston motors
- ● Propel motor shields
- ● Spring-applied, hydraulically released automatic propel brake
- ● Track guides, front idler and center
- ● Two-speed propel with automatic shift
- ● Upper carrier rollers (2)
- ● Sealed and lubricated track chain
- ▲ Triple semi-grouser shoes, 24 in. (600 mm)
- ▲ Triple semi-grouser shoes, 28 in. (700 mm)

Upperstructure

- ● Right- and left-hand mirrors
- ● Vandal locks with ignition key: Cab door / Fuel cap / Service doors / Toolbox
- ● Remote-mounted engine oil and fuel filters

Front Attachments

- ● Centralized lubrication system
- ● Dirt seals on all bucket pins
- ● Less boom and arm
- ● HN bushings
- ● Reinforced resin thrust plates
- ● Tungsten carbide thermal coating on arm-to-bucket joint
- ▲ Arm, 8 ft. 6 in. (2.60 m)
- ▲ Arm, 10 ft. 2 in. (3.10 m)
- ▲ Attachment quick-couplers
- ▲ Boom cylinder with plumbing to mainframe for less boom and arm
- ▲ Buckets: Ditching / Heavy duty / Heavy-duty high capacity / Side cutters and teeth
- ▲ Material clamps
- ▲ Super-long fronts

Operator's Station

- ● Adjustable independent control positions (levers-to-seat, seat-to-pedals)
- ● AM/FM radio
- ● Auto climate control/air conditioner, 20,000 Btu/hr. (5.9 kW) with heater and pressurizer
- ● Built-in Operator's Manual storage compartment and manual
- ● Cell-phone power outlet, 12 volt, 60 watt, 5 amp
- ● Coat hook
- ● Deluxe suspension cloth seat with 4-in. (100 mm) adjustable armrests
- ● Floor mat
- ● Front windshield wiper with intermittent speeds
- ● Gauges (illuminated): Engine coolant / Fuel
- ● Horn, electric
- ● Hourmeter, electric
- ● Hydraulic shutoff lever, all controls
- ● Hydraulic warm-up control
- ● Interior light
- ● Large cup holder
- ● Machine Information Center (MIC)
- ● Mode selectors (illuminated): Power modes – three / Travel modes – two with automatic shift / Work mode – one
- ● Multifunction, color LCD monitor with: Diagnostic capability / Multiple-language capabilities / Maintenance tracking / Clock / Theft-deterrent system / System monitoring with alarm features: Auto-idle indicator, engine air cleaner restriction indicator light, engine check, engine coolant temperature indicator light with audible alarm, engine oil pressure indicator light with audible alarm, low-alternator-charge indicator light, low-fuel indicator light, fault code alert indicator, fuel-rate display, wiper-mode indicator, work-lights-on indicator, and work-mode indicator
- ▲ Monitor system with alarm features: Hydraulic oil filter restriction indicator light
- ● Motion alarm with cancel switch (conforms to SAE J994)
- ● Power-boost switch on right console lever
- ● Auxiliary hydraulic control switches in right console lever
- ● SAE two-lever control pattern
- ● Seat belt, 2 in. (51 mm), retractable
- ▲ Seat belt, 3 in. (76 mm), non-retractable
- ● Tinted glass
- ● Transparent tinted overhead hatch
- ● Hot/cold beverage compartment
- ▲ Air-suspension heated seat
- ▲ 24- to 12-volt D.C. radio convertors, 10 amp
- ▲ Protection screens for cab front, rear, and side
- ▲ Window vandal protection covers

Electrical

- ● 50-amp alternator
- ● Blade-type multi-fused circuits
- ● Positive terminal battery covers
- ▲ Cab extension wiring harness
- ▲ ZXLink™

Lights

- ● Work lights: Halogen / One mounted on boom / One mounted on frame

Control Owning and Operating Costs

Customer Personal Service (CPS) is part of Hitachi's proactive, fix-before-fail strategy on machine maintenance that will help control costs, increase profits, and reduce stress. Included in this comprehensive lineup of ongoing programs and services are:

Fluid analysis program – tells you what's going on inside all of your machine's major components so you'll know if there's a problem before you see a decline in performance. Fluid analysis is included in most extended coverage and preventive-maintenance agreements.

Component life-cycle data – gives you vital information on the projected life span of components and lets you make informed decisions on machine maintenance by telling you approximately how many hours of use you can expect from an engine, transmission, or hydraulic pump. This information can be used to preempt catastrophic downtime by servicing major components at about 80 percent of their life cycle.

Preventive Maintenance (PM) agreements – give you a fixed cost for maintaining a machine for a given period of time. They also help you avoid downtime by ensuring that critical maintenance work gets done right and on schedule. On-site preventive maintenance service performed where and when you need it helps protect you from the expense of catastrophic failures and lets you avoid waste-disposal hassles.

Extended coverage – gives you a fixed cost for machine repairs for a given period of time so you can effectively manage costs. Whether you work in a severe-service setting or just want to spread the risk of doing business, this is a great way to custom-fit coverage for your operation. And an extended coverage contract also travels well because it's backed by Hitachi and is honored by all Hitachi construction dealers.

Customer Support Advisors (CSAs) – Hitachi believes the CSA program lends a personal quality to Customer Personal Service (CPS). Certified CSAs have the knowledge and skills for helping make important decisions on machine maintenance and repair. Their mission is to help you implement a plan that's right for your business and take the burden of machine maintenance off your shoulders.

Net engine power is with standard equipment including air cleaner, exhaust system, alternator, and cooling fan at test conditions per ISO9249. No derating is required up to 10,000-ft. (3050 m) altitude. Specifications and design subject to change without notice. Wherever applicable, specifications are in accordance with SAE standards. Except where otherwise noted, these specifications are based on a unit with 28-in. (700 mm) triple semi-grouser shoes; 10-ft. 2-in. (3.10 m) arm; 36-in. (914 mm), 0.81-cu. yd. (0.62 m³), 1,373-lb. (623 kg) heavy-duty bucket; 7,275-lb. (3300 kg) counterweight; full fuel tank; and 175-lb. (79 kg) operator.

HITACHI

DKAZX160HT Litho in U.S.A. (07-03)

Hitachi Construction and Mining Products • 1515 5th Avenue • Moline, IL 61265 • www.hitachiconstruction.com

	NATIONAL AIRPORT PAVEMENT TEST FACILITY TRANSMITTAL OF SHOP DRAWINGS, EQUIPMENT DATA, MATERIAL SAMPLES, OR MANUFACTURER'S CERTIFICATES OF COMPLIANCE	**National Airport Pavement Test Facility** **William J. Hughes Technical Center** **Atlantic City International Airport** **New Jersey 08405**

Task Order:			**Date Submitted:**	
Project Name:			**Specification No.:**	
Transmittal Description:			**Source:**	
Transmittal Purpose:			**Transmittal Type:**	

Item No.:	**Description:**	**Variation:**	**Contractor Recommendation:**

Contractor Remarks:

1	
2	
3	
4	
5	
6	
7	
8	
9	
10	

Contractor Approval Actions:

Janine Abyad	
Contractor Name & Signature	***Date***

FAA Review Action Codes:

		"A" - Approved as Submitted; Completed	**FAA Approval Actions:**	
		"B" - Approved, except as noted on drawings; Completed		
		"C" - Approved, resubmission required		
		"D" - Returned by Correspondence; Completed		
		"E" - Disapproved (see attached); Resubmit		
		"F" - Receipt Acknowledged; Completed		
		"G" - Other (Specify); Resubmit		
		"X" - Receipt Acknowledged, does not comply; Resubmit	***FAA Name & Signature***	***Date***

Additional FAA Comments:

1	
2	
3	
4	
5	

SUBMITTAL COVER

A.E. STONE, INC.
1435 Doughty Road
Egg Harbor Township, NJ 08234
Work Order N0. 1815

Tel: 609-641-2781
Fax: 609-641-0374

DATE: 11/6/2018

SUBMITTAL #: 011

PROJECT: Outdoor / Indoor Reflective Cracking Phase I Construction
William J. Hughes Technical Center, National Airport Pavement Research Center
Atlantic City International Airport, New Jersey

OWNER: FAA
William J. Hughes Technical Center
Atlantic City Airport, New Jersey
Northfield, NJ

Attn: Benjamin Mahaffay
Tel: 602-550-5275
Fax:
E-mail: benjamin.mahaffay@faa.gov

ENGINEER: SRA International Inc.
Egg Harbor Township, NJ 08234

Attn: Janine Abyad
Tel: 973-356-5030
Fax:
E-mail: Abyad, Janine [janine.abyad@gdit.com]

CONTRACTOR: A.E. Stone, Inc.

SUBCONTRACTOR: **L. Feriozzi Concrete Company**

SUBMITTAL PAGES: 1

ITEM NO.: **N/A**

UNIT CODE NO.:

ITEM DESCRIPTION: **Concrete Placement Equipment**

SPECIFICATION: **P501**

PRIORITY:

MANUFACTURER or SUPPLIER

NOTES:

FOR ENGINEER USE ONLY

This is to certify that the above is submitted in accordance with the applicable plans and specifications for this project.

A.E. STONE, INC.

Christopher Brower

SUBMITTAL COVER SHEET

L.FERIOZZI CONCRETE COMPANY

3010 Sunset Avenue
Atlantic City, New Jersey 08401
Phone (609) 823-2563
Fax (609) 344-3719

DATE: 11/6/18	**LFCC JOB #**
PROJECT: **Outdoor Reflective Cracking at FAA**	
TO: **AE Stone** **Attn: Christopher Brower**	SUBCONTRACTOR:

DATE	NO.	COPIES	DESCRIPTION
11/6/18	011	1	Husqvarna Soff-Cut 390
		1	Husqvarna FS 3500 G

CONTRACTOR REVIEW	ARCHITECT / DESIGNER APPROVAL
We hereby state that we have reviewed, inspected and checked the information herewith submitted and vouch for its accuracy and compliance with the Contract Documents.	
DATE: **11/6/18**	
SIGNED: **Martin J. Gorka**	

Soff-Cut® Saws

Husqvarna Soff-Cut 390

The Husqvarna Soff-Cut 390 electric saw is designed for residential and light commercial applications. The 390 is designed for ease of use and convenience. Features include a carrying case for easy transport, lightweight, adjustable aggregate knob and depth gauge, and a pre-paid maintenance program to provide long life.

Cutting depth, max	**28.6 mm**
Blade diameter, max	**140 mm**
Rated input power	**1.7 kW**

Article number EARLY ENTRY SAWS Soff-Cut 390 2.3 hp | 110-115 V | 5 1/2" - 966 84 49-01

[redacted]

Get quote

Our local salesman can give you **price quotes, book a demo or give you a call** to talk more.

SPARE PARTS | MANUALS

Add to wish list

Share

- Facebook
- Twitter
- Pinterest
- Print this page

FEATURES

Want to take a closer look? Learn more about the product in depth by exploring its features and benefits.

Soff-Cut® technology

Husqvarna Soff-Cut is a unique patented system for early entry concrete sawing. This technology enables concrete to be cut within the first one or two hours of finishing and before final set. Husqvarna Soff-Cut™ provides the best solution for minimizing the risk of random cracking, and it simplifies the working process compared to conventional sawing. +

SPECIFICATIONS

Compare Soff-Cut® Saws

Engine

Rated input power	**1.7 kW**

Cutting equipment

Blade depth control	**Manual**
Cutting depth, max	**28.6 mm**
Blade diameter, max	**140 mm**

Dimensions

Weight	**12 kg**
Product size length	**292.1 mm**
Product size height	**292.1 mm**

SPARE PARTS

Find your spare part article number

Here you can download the illustrated parts list for your early entry saw.

Download Soff-Cut 390 parts list

DIAMOND TOOLS

eries

Bronze

FLX SC

FLX-3000

aterials

Granite

Green concrete Medium to Soft aggregate

Flat Saws

Husqvarna FS 3500 G

FS 3500 G is a self-propelled floor saw ideal for small to medium patch and service jobs. Equipped with a 37 hp (27.5 kW) Kohler gasoline engine. It is lightweight, low profiled, easy to maneuver and service. The Poly-V belt together with a self-adjusting belt tensioner ensures stable power levels at the blade shaft. Cutting depth capacity up to 12-3/8" (311 mm) with a 30" (750 mm) diamond blade. Comes standard with adjustable handle bars, engine tachometer and hour meter. Water pump kit and light kit available as options.

- Cutting depth, max **312 mm**
- Output power (As rated by the engine/motor manufacture) **27.5 kW**
- Blade diameter, max **500 mm**

Select product variant

FLOOR SAW FS 3500 G 20" - 967 67 37-01

Article number FLOOR SAW FS 3500 G 20" - 967 67 37-01

[redacted]

Get quote

Our local salesman can give you **price quotes, book a demo or give you a call** to talk more.

Add to wish list

Share

- Facebook
- Twitter
- Pinterest
- Print this page

NEW

SPARE PARTS | MANUALS

FEATURES

Want to take a closer look? Learn more about the product in depth by exploring its features and benefits.

Clam cleat pointer rope holder

Reduces pointer rope damage and holds front pointer at a set height.

Automatic belt tensioner and Poly-V belt

Offers no maintenance, lower cost of ownership, consistent power and increased production.

Options include LED light-kit and water pump kit

LED offers lower electrical power consumption and water pump kit allows cutting with low water pressure and flow.

Classic and intuitive control panel

Includes engine tachometer and water safety system.

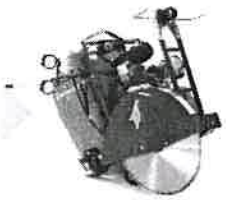

Show more features

SPECIFICATIONS

Compare Flat Saws

Engine

Output power (As rated by the engine/motor manufacture)	**27.5 kW**
Engine cooling	**Air**
Fuel tank volume	**23.8 l**
Cylinders	**2**
Number of strokes	**4-stroke engine**

Cutting equipment

Arbor diameter	**25.4 mm**
Blade depth control	**Electric hydraulic**
Blade diameter, max	**500 mm**
Cutting depth, max	**312 mm**

Transmission

Transmission speed reverse	**51 m/min**
Transmission speed forward	**51 m/min**

Dimensions

Product size length	**1168 mm**
Product size width	**807 mm**
Product size height	**1152 mm**
Weight	**431 kg**

SPARE PARTS

Find your spare part article number

Here you can download the illustrated parts list for your floor saw.

Download FS 3500 G parts list